Optocoupler, Phototransistor Output, AC Input

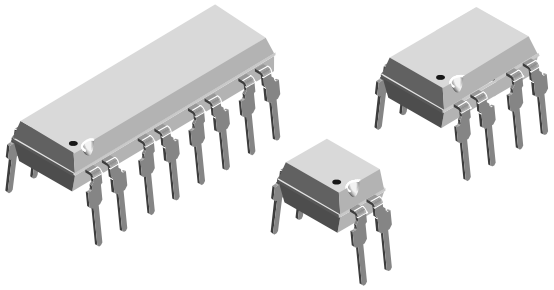

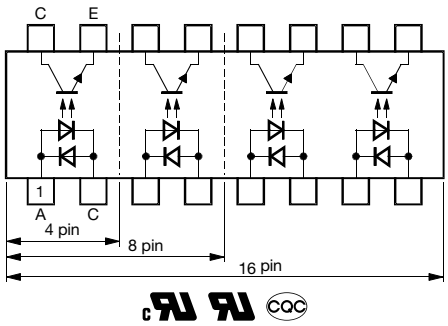

FEATURES

- Endstackable to 2.54 mm (0.1") spacing
- DC isolation test voltage V_{ISO} = 5000 V_{RMS}
- Low coupling capacitance of typical 0.3 pF
- Current transfer ratio (CTR) of typical 100 %
- Low temperature coefficient of CTR
- Wide ambient temperature range
- Material categorization: for definitions of compliance please see www.vishay.com/doc?99912

Pb-free

e3

RoHS COMPLIANT

APPLICATIONS

- Feature phones
- Answering machines
- PBX
- Fax machines

AGENCY APPROVALS

- UL
- cUL
- CQC

LINKS TO ADDITIONAL RESOURCES

Product Page | Design Tools | Footprints | SPICE Models

DESCRIPTION

The K814P, K824P, K844P consist of a phototransistor optically coupled to 2 gallium arsenide infrared emitting diodes (reverse polarity) in 4 pin (single); 8 pin (dual) or 16-pin (quad) plastic dual inline package.

The elements are mounted on one leadframe providing a fixed distance between input and output for highest safety requirements.

ORDERING INFORMATION

K	8	#	4	P

PART NUMBER

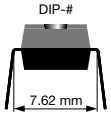

AGENCY CERTIFIED / PACKAGE	CTR (%)
UL, cUL	**> 20**
DIP-4, single channel	K814P
DIP-8, dual channel	K824P
DIP-16, quad channel	K844P

For technical questions, contact: optocoupleranswers@vishay.com

THIS DOCUMENT IS SUBJECT TO CHANGE WITHOUT NOTICE. THE PRODUCTS DESCRIBED HEREIN AND THIS DOCUMENT ARE SUBJECT TO SPECIFIC DISCLAIMERS, SET FORTH AT www.vishay.com/doc?91000

ABSOLUTE MAXIMUM RATINGS (T_{amb} = 25 °C, unless otherwise specified)				
PARAMETER	**CONDITION**	**SYMBOL**	**VALUE**	**UNIT**
INPUT				
Forward current		I_F	60	mA
Forward surge current	$t_p \leq 10$ µs	I_{FSM}	1.5	A
Power dissipation		P_{diss}	100	mW
Junction temperature		T_j	125	°C
OUTPUT				
Collector emitter voltage		V_{CEO}	70	V
Emitter collector voltage		V_{ECO}	7	V
Collector current		I_C	50	mA
Collector peak current	$t_p/T = 0.5$, $t_p \leq 10$ ms	I_{CM}	100	mA
Power dissipation		P_{diss}	150	mW
Junction temperature		T_j	125	°C
COUPLER				
AC isolation test voltage (RMS)	t = 1.0 min	V_{ISO}	5000	V_{RMS}
Total power dissipation		P_{tot}	250	mW
Operating ambient temperature range		T_{amb}	-40 to +100	°C
Storage temperature range		T_{stg}	-55 to +125	°C
Soldering temperature [1]	2 mm from case, t ≤ 10 s	T_{sld}	260	°C

Notes

- Stresses in excess of the absolute maximum ratings can cause permanent damage to the device. Functional operation of the device is not implied at these or any other conditions in excess of those given in the operational sections of this document. Exposure to absolute maximum ratings for extended periods of the time can adversely affect reliability.

(1) Refer to reflow profile for soldering conditions for surface mounted devices

ELECTRICAL CHARACTERISTICS (T_{amb} = 25 °C, unless otherwise specified)						
PARAMETER	**TEST CONDITION**	**SYMBOL**	**MIN.**	**TYP.**	**MAX.**	**UNIT**
INPUT						
Forward voltage	I_F = 50 mA	V_F	-	1.25	1.6	V
Reverse current	V_R = ± 6 V	I_R	-	-	10	µA
OUTPUT						
Collector emitter breakdown voltage	I_C = 100 µA	BV_{CEO}	70	-	-	V
Emitter collector breakdown voltage	I_E = 10 µA	BV_{ECO}	7	-	-	V
Collector dark current	V_{CE} = 20 V, I_F = 0, E = 0	I_{CEO}	-	-	100	nA
COUPLER						
Collector emitter saturation voltage	I_F = ± 10 mA, I_C = 1 mA	V_{CEsat}	-	-	0.3	V
Cut-off frequency	I_F = ± 10 mA, V_{CE} = 5 V, R_L = 100 Ω	f_c	-	100	-	kHz
Coupling capacitance	f = 1 MHz	C_k	-	0.3	-	pF

Note

- Minimum and maximum values are testing requirements. Typical values are characteristics of the device and are the result of engineering evaluation. Typical values are for information only and are not part of the testing requirements.

CURRENT TRANSFER RATIO (T_{amb} = 25 °C, unless otherwise specified)							
PARAMETER	**TEST CONDITION**	**PART**	**SYMBOL**	**MIN.**	**TYP.**	**MAX.**	**UNIT**
I_C/I_F	I_F = ± 5 mA, V_{CE} = 5 V	K814P	CTR	20	-	300	%

For technical questions, contact: optocoupleranswers@vishay.com

THIS DOCUMENT IS SUBJECT TO CHANGE WITHOUT NOTICE. THE PRODUCTS DESCRIBED HEREIN AND THIS DOCUMENT ARE SUBJECT TO SPECIFIC DISCLAIMERS, SET FORTH AT www.vishay.com/doc?91000

SWITCHING CHARACTERISTICS (T_{amb} = 25 °C, unless otherwise specified)						
PARAMETER	TEST CONDITION	SYMBOL	MIN.	TYP.	MAX.	UNIT
Delay time	V_S = 5 V, I_C = 2 mA, R_L = 100 Ω (see Fig. 1)	t_d	-	3	-	µs
Rise time	V_S = 5 V, I_C = 2 mA, R_L = 100 Ω (see Fig. 1)	t_r	-	3	-	µs
Fall time	V_S = 5 V, I_C = 2 mA, R_L = 100 Ω (see Fig. 1)	t_f	-	4.7	-	µs
Storage time	V_S = 5 V, I_C = 2 mA, R_L = 100 Ω (see Fig. 1)	t_s	-	0.3	-	µs
Turn-on time	V_S = 5 V, I_C = 2 mA, R_L = 100 Ω (see Fig. 1)	t_{on}	-	6	-	µs
Turn-off time	V_S = 5 V, I_C = 2 mA, R_L = 100 Ω (see Fig. 1)	t_{off}	-	5	-	µs
Turn-on time	V_S = 5 V, I_C = 10 mA, R_L = 1 kΩ (see Fig. 1)	t_{on}	-	9	-	µs
Turn-off time	V_S = 5 V, I_C = 10 mA, R_L = 1 kΩ (see Fig. 1)	t_{off}	-	18	-	µs

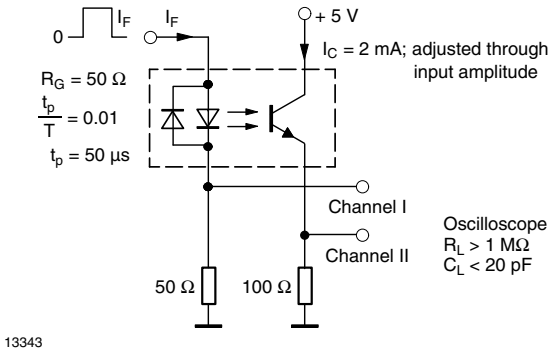

Fig. 1 - Test Circuit, Non-Saturated Operation

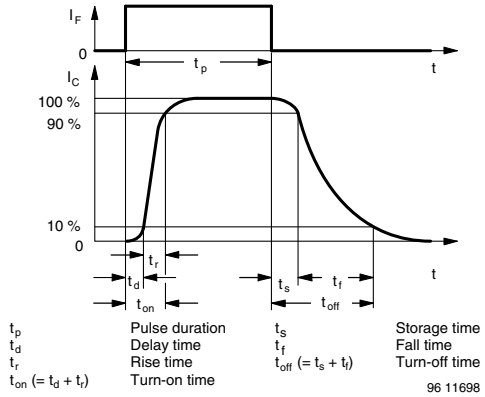

Fig. 3 - Switching Times

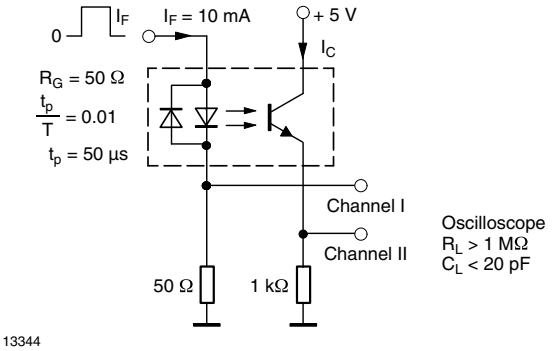

Fig. 2 - Test Circuit, Saturated Operation

For technical questions, contact: optocoupleranswers@vishay.com

THIS DOCUMENT IS SUBJECT TO CHANGE WITHOUT NOTICE. THE PRODUCTS DESCRIBED HEREIN AND THIS DOCUMENT ARE SUBJECT TO SPECIFIC DISCLAIMERS, SET FORTH AT www.vishay.com/doc?91000

TYPICAL CHARACTERISTICS (T_{amb} = 25 °C, unless otherwise specified)

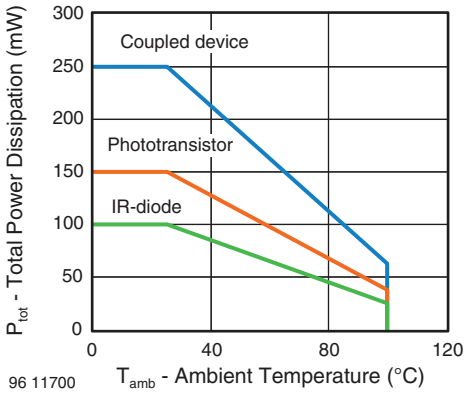

Fig. 4 - Total Power Dissipation vs. Ambient Temperature

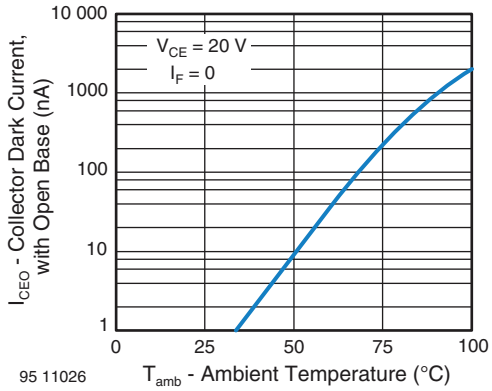

Fig. 7 - Collector Dark Current vs. Ambient Temperature

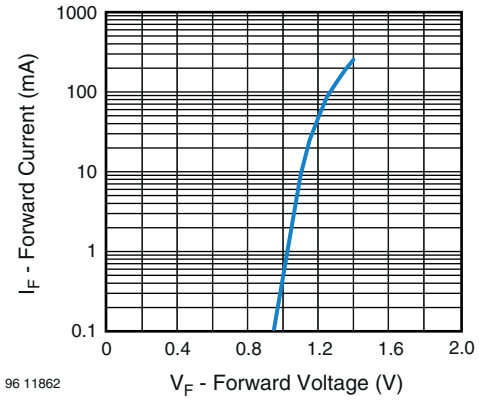

Fig. 5 - Forward Current vs. Forward Voltage

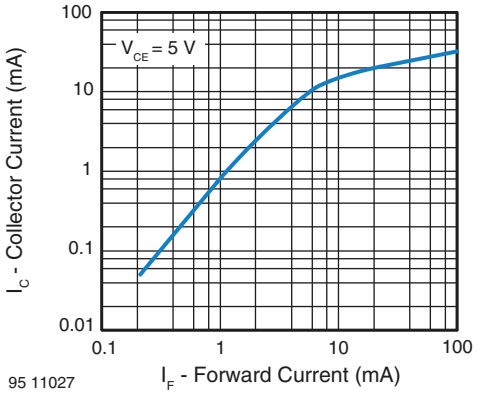

Fig. 8 - Collector Current vs. Forward Current

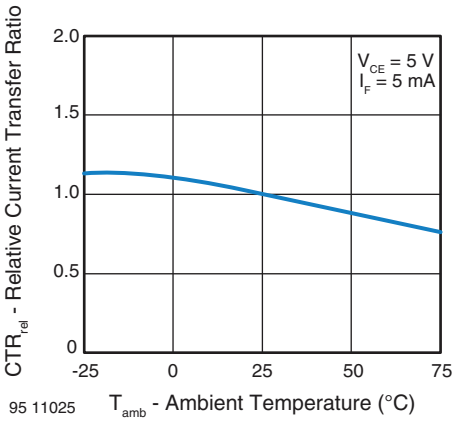

Fig. 6 - Relative Current Transfer Ratio vs. Ambient Temperature

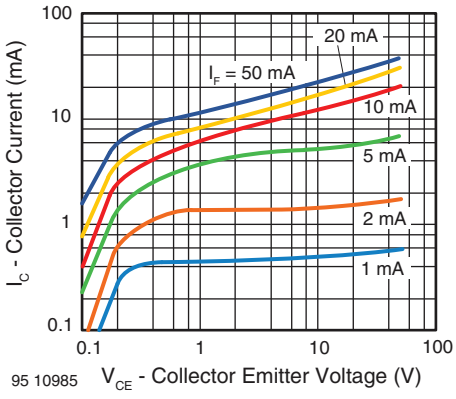

Fig. 9 - Collector Current vs. Collector Emitter Voltage

For technical questions, contact: optocoupleranswers@vishay.com

THIS DOCUMENT IS SUBJECT TO CHANGE WITHOUT NOTICE. THE PRODUCTS DESCRIBED HEREIN AND THIS DOCUMENT ARE SUBJECT TO SPECIFIC DISCLAIMERS, SET FORTH AT www.vishay.com/doc?91000

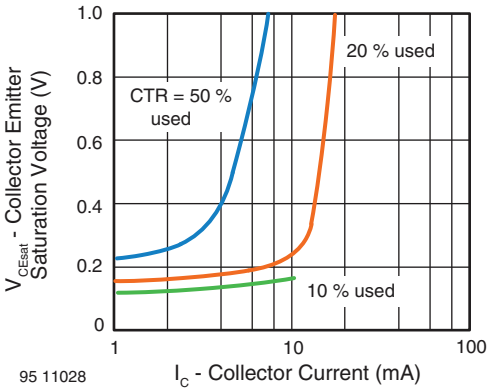

Fig. 10 - Collector Emitter Saturation Voltage vs. Collector Current

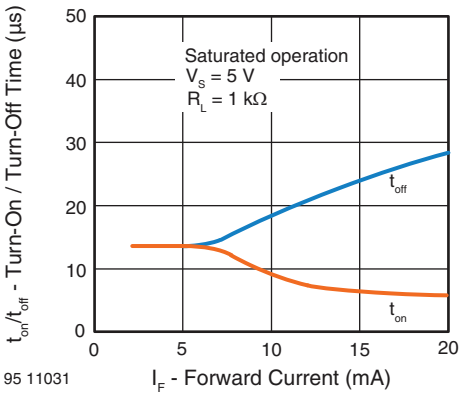

Fig. 12 - Turn-on / Turn-off Time vs. Forward Current

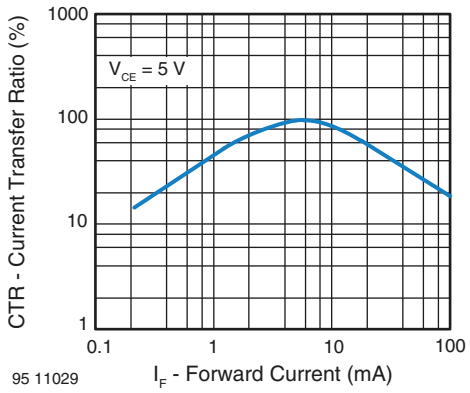

Fig. 11 - Current Transfer Ratio vs. Forward Current

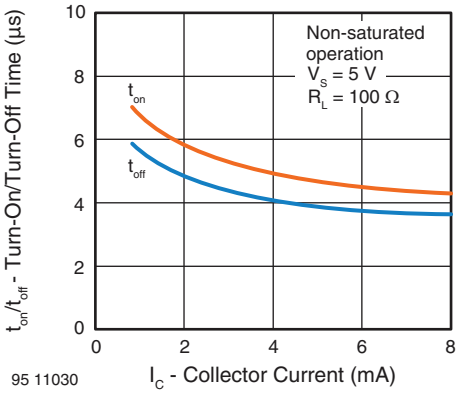

Fig. 13 - Turn-on / Turn-off Time vs. Collector Current

For technical questions, contact: optocoupleranswers@vishay.com

THIS DOCUMENT IS SUBJECT TO CHANGE WITHOUT NOTICE. THE PRODUCTS DESCRIBED HEREIN AND THIS DOCUMENT ARE SUBJECT TO SPECIFIC DISCLAIMERS, SET FORTH AT www.vishay.com/doc?91000

PACKAGE DIMENSIONS in millimeters

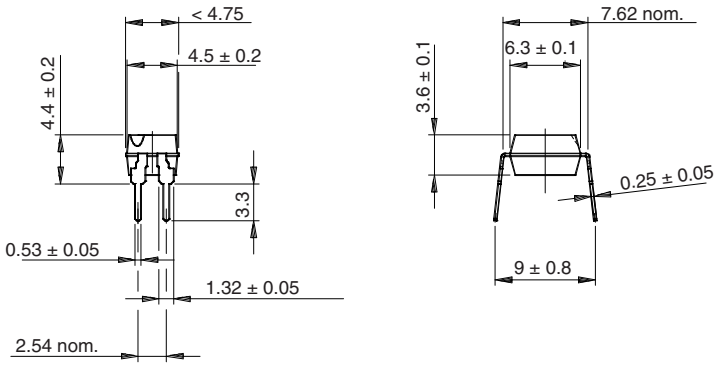

E. g.:
Special features: endstackable
to 2.54 mm (0.100") spacing

Weight: ca. 0.25 g
Creepage distance: > 6 mm
Air path: > 6 mm
after mounting on PC board

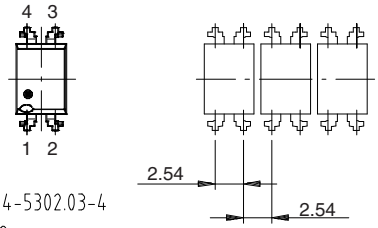

Drawing-No.: 6.544-5302.03-4
Issue: 5; 20.03.02

14789

technical drawings
according to DIN
specifications

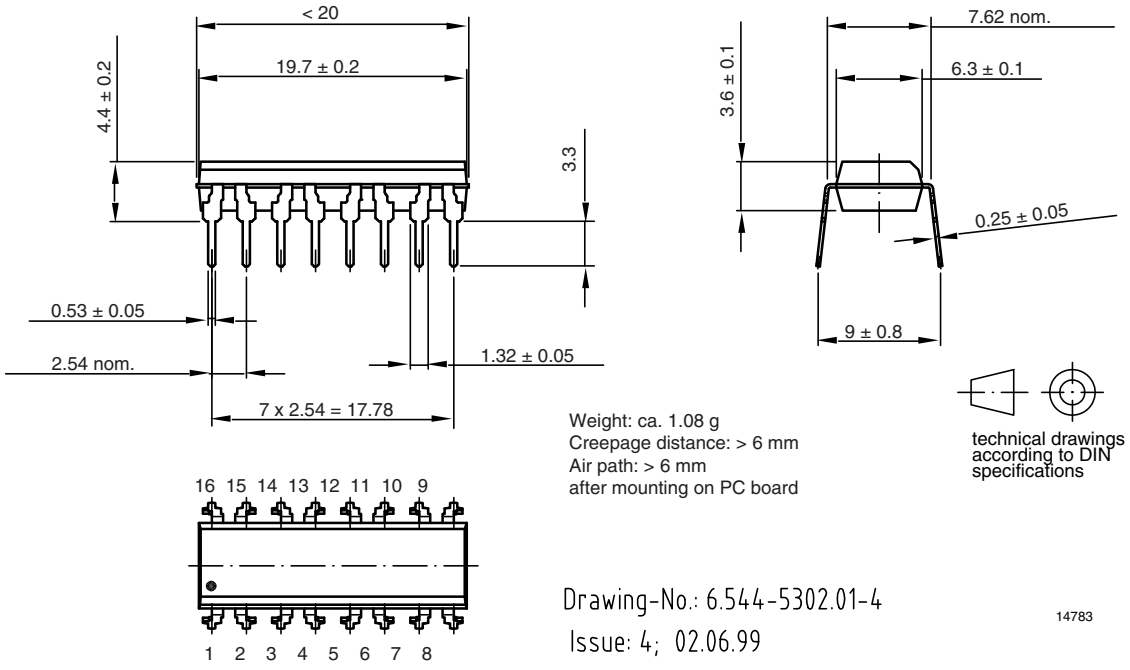

Weight: ca. 1.08 g
Creepage distance: > 6 mm
Air path: > 6 mm
after mounting on PC board

technical drawings
according to DIN
specifications

Drawing-No.: 6.544-5302.01-4
Issue: 4; 02.06.99

14783

For technical questions, contact: optocoupleranswers@vishay.com

THIS DOCUMENT IS SUBJECT TO CHANGE WITHOUT NOTICE. THE PRODUCTS DESCRIBED HEREIN AND THIS DOCUMENT ARE SUBJECT TO SPECIFIC DISCLAIMERS, SET FORTH AT www.vishay.com/doc?91000

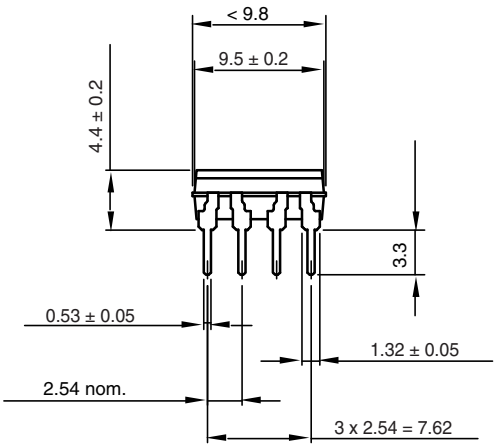

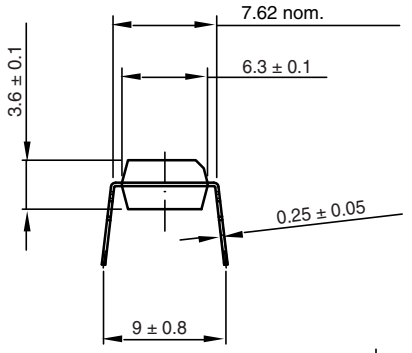

Weight: ca. 0.55 g
Creepage distance: > 6 mm
Air path: > 6 mm
after mounting on PC board

technical drawings
according to DIN
specifications

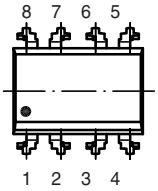

Drawing-No.: 6.544-5302.02-4
Issue: 4; 02.06.99

14784

PACKAGE MARKING (example)



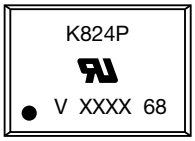

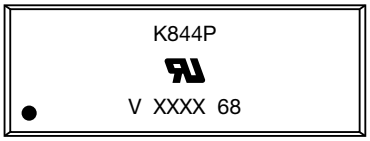

Note

- XXXX = LMC (lot marking code)

For technical questions, contact: optocoupleranswers@vishay.com

THIS DOCUMENT IS SUBJECT TO CHANGE WITHOUT NOTICE. THE PRODUCTS DESCRIBED HEREIN AND THIS DOCUMENT ARE SUBJECT TO SPECIFIC DISCLAIMERS, SET FORTH AT www.vishay.com/doc?91000

Disclaimer

ALL PRODUCT, PRODUCT SPECIFICATIONS AND DATA ARE SUBJECT TO CHANGE WITHOUT NOTICE TO IMPROVE RELIABILITY, FUNCTION OR DESIGN OR OTHERWISE.

Vishay Intertechnology, Inc., its affiliates, agents, and employees, and all persons acting on its or their behalf (collectively, “Vishay”), disclaim any and all liability for any errors, inaccuracies or incompleteness contained in any datasheet or in any other disclosure relating to any product.

Vishay makes no warranty, representation or guarantee regarding the suitability of the products for any particular purpose or the continuing production of any product. To the maximum extent permitted by applicable law, Vishay disclaims (i) any and all liability arising out of the application or use of any product, (ii) any and all liability, including without limitation special, consequential or incidental damages, and (iii) any and all implied warranties, including warranties of fitness for particular purpose, non-infringement and merchantability.

Statements regarding the suitability of products for certain types of applications are based on Vishay's knowledge of typical requirements that are often placed on Vishay products in generic applications. Such statements are not binding statements about the suitability of products for a particular application. It is the customer's responsibility to validate that a particular product with the properties described in the product specification is suitable for use in a particular application. Parameters provided in datasheets and / or specifications may vary in different applications and performance may vary over time. All operating parameters, including typical parameters, must be validated for each customer application by the customer's technical experts. Product specifications do not expand or otherwise modify Vishay's terms and conditions of purchase, including but not limited to the warranty expressed therein.

Hyperlinks included in this datasheet may direct users to third-party websites. These links are provided as a convenience and for informational purposes only. Inclusion of these hyperlinks does not constitute an endorsement or an approval by Vishay of any of the products, services or opinions of the corporation, organization or individual associated with the third-party website. Vishay disclaims any and all liability and bears no responsibility for the accuracy, legality or content of the third-party website or for that of subsequent links.

Vishay products are not designed for use in life-saving or life-sustaining applications or any application in which the failure of the Vishay product could result in personal injury or death unless specifically qualified in writing by Vishay. Customers using or selling Vishay products not expressly indicated for use in such applications do so at their own risk. Please contact authorized Vishay personnel to obtain written terms and conditions regarding products designed for such applications.

No license, express or implied, by estoppel or otherwise, to any intellectual property rights is granted by this document or by any conduct of Vishay. Product names and markings noted herein may be trademarks of their respective owners.

© 2024 VISHAY INTERTECHNOLOGY, INC. ALL RIGHTS RESERVED

THIS DOCUMENT IS SUBJECT TO CHANGE WITHOUT NOTICE. THE PRODUCTS DESCRIBED HEREIN AND THIS DOCUMENT ARE SUBJECT TO SPECIFIC DISCLAIMERS, SET FORTH AT www.vishay.com/doc?91000