Optocoupler, Phototransistor Output, no Base Connection

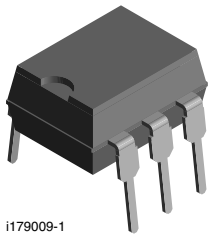

i179009-1

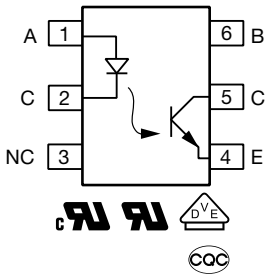

FEATURES

- Isolation test voltage, 5300 V_{RMS}
- No base terminal connection for improved common mode interface immunity
- Long term stability
- Industry standard dual in line package
- Material categorization: for definitions of compliance please see www.vishay.com/doc?99912

Pb-free

e3

RoHS COMPLIANT

LINKS TO ADDITIONAL RESOURCES

3D Models | Design Tools | Related Documents | SPICE Models | Footprints | Schematics

AGENCY APPROVALS

- UL
- cUL
- DIN EN 60747-5-5 (VDE 0884), available with option 1
- BSI EN 62368-1
- CQC GB4943.1-2011
- CQC GB8898-2011

DESCRIPTION

The MOC8101, MOC8102, MOC8103, MOC8104 family optocoupler consisting of a gallium arsenide infrared emitting diode optically coupled to a silicon planar phototransistor detector in a plastic plug-in DIP-6 package.

The coupling device is suitable for signal transmission between two electrically separated circuits. The potential difference between the circuits to be coupled should not exceed the maximum permissible reference voltages.

The base terminal of the MOC8101, MOC8102, MOC8103, MOC8104 is not connected, resulting in a substantially improved common mode interference immunity.

ORDERING INFORMATION

M	O	C	8	1	0	#	-	#	X	0	#	#	T
PART NUMBER								CTR BIN	PACKAGE OPTION				TAPE AND REEL

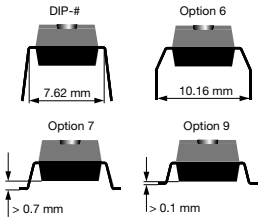

AGENCY CERTIFIED / PACKAGE	CTR (%)			
	10 mA			
UL, cUL, BSI, CQC	**50 to 80**	**73 to 117**	**108 to 173**	**160 to 256**
DIP-6	MOC8101	MOC8102	MOC8103	MOC8104
DIP-6, 400 mil, option 6	-	MOC8102-X006	-	-
SMD-6, option 9	-	MOC8102-X009 (1)	-	-
UL, cUL, BSI, CQC, VDE (Option 1)	**50 to 80**	**73 to 117**	**108 to 173**	**160 to 256**
DIP-6	-	-	MOC8103-X001	-
DIP-6, 400 mil	-	MOC8102-X016	-	MOC8104-X016
SMD-6, option 7	MOC8101-X017T	MOC8102-X017T (1)	-	-
SMD-6, option 9	-	-	-	MOC8104-X019T

Notes

- Additional options may be possible, please contact sales office

(1) Also available in tubes; do not put T on end

For technical questions, contact: optocoupleranswers@vishay.com

THIS DOCUMENT IS SUBJECT TO CHANGE WITHOUT NOTICE. THE PRODUCTS DESCRIBED HEREIN AND THIS DOCUMENT ARE SUBJECT TO SPECIFIC DISCLAIMERS, SET FORTH AT www.vishay.com/doc?91000

ABSOLUTE MAXIMUM RATINGS (T_{amb} = 25 °C, unless otherwise specified)				
PARAMETER	**TEST CONDITION**	**SYMBOL**	**VALUE**	**UNIT**
INPUT				
Reverse voltage		V_R	6.0	V
Forward continuous current		I_F	60	mA
Surge forward current	t ≤ 10 µs	I_{FSM}	2.5	A
Power dissipation		P_{diss}	100	mW
Derate linearly from 25°C			1.33	mW/°C
OUTPUT				
Collector emitter breakdown voltage		BV_{CEO}	30	V
Emitter collector breakdown voltage		BV_{ECO}	7.0	V
Collector current		I_C	50	mA
Derate linearly from 25°C			2.0	mW/°C
Power dissipation		P_{diss}	150	mW
COUPLER				
Derate linearly from 25 °C			3.33	mW/°C
Total power dissipation		P_{tot}	250	mW
Storage temperature		T_{stg}	-55 to +150	°C
Operating temperature		T_{amb}	-55 to +100	°C
Junction temperature		T_j	100	°C
Soldering temperature (1)	max. 10 s, dip soldering: distance to seating plane ≥ 1.5 mm	T_{sld}	260	°C

Notes

- Stresses in excess of the absolute maximum ratings can cause permanent damage to the device. Functional operation of the device is not implied at these or any other conditions in excess of those given in the operational sections of this document. Exposure to absolute maximum ratings for extended periods of the time can adversely affect reliability

(1) Refer to reflow profile for soldering conditions for surface mounted devices (SMD). Refer to wave profile for soldering conditions for through hole devices (DIP)

ELECTRICAL CHARACTERISTICS (T_{amb} = 25 °C, unless otherwise specified)							
PARAMETER	**TEST CONDITION**	**PART**	**SYMBOL**	**MIN.**	**TYP.**	**MAX.**	**UNIT**
INPUT							
Forward voltage	I_F = 10 mA		V_F	-	1.25	1.5	V
Breakdown voltage	I_R = 10 µA		V_{BR}	6.0	-	-	V
Reverse current	V_R = 6.0 V		I_R	-	0.01	10	µA
Capacitance	V_R = 0 V, f = 1.0 MHz		C_O	-	25	-	pF
Thermal resistance			R_{thja}	-	750	-	K/W
OUTPUT							
Collector emitter capacitance	V_{CE} = 5.0 V, f = 1.0 MHz		C_{CE}	-	5.2	-	pF
Collector emitter dark current	V_{CE} = 10 V, T_{amp} = 25 °C	MOC8101	I_{CEO1}	-	1.0	50	nA
	V_{CE} = 10 V, T_{amp} = 100 °C	MOC8102	I_{CEO1}	-	1.0	-	µA
Collector emitter breakdown voltage	I_C = 1.0 mA		BV_{CEO}	30	-	-	V
Emitter collector breakdown voltage	I_E = 100 µA		BV_{ECO}	7.0	-	-	V
Thermal resistance			R_{thja}	-	500	-	K/W
COUPLER							
Saturation voltage collector emitter	I_F = 5.0 mA		V_{CEsat}	-	0.25	0.4	V
Coupling capacitance			C_C	-	0.6	-	pF

Note

- Minimum and maximum values are testing requirements. Typical values are characteristics of the device and are the result of engineering evaluation. Typical values are for information only and are not part of the testing requirements

For technical questions, contact: optocoupleranswers@vishay.com
THIS DOCUMENT IS SUBJECT TO CHANGE WITHOUT NOTICE. THE PRODUCTS DESCRIBED HEREIN AND THIS DOCUMENT ARE SUBJECT TO SPECIFIC DISCLAIMERS, SET FORTH AT www.vishay.com/doc?91000

CURRENT TRANSFER RATIO (T_{amb} = 25 °C, unless otherwise specified)							
PARAMETER	**TEST CONDITION**	**PART**	**SYMBOL**	**MIN.**	**TYP.**	**MAX.**	**UNIT**
Current transfer ratio	V_{CE} = 10 V, I_F = 10 mA	MOC8101	CTR	50	-	80	%
		MOC8102	CTR	73	-	117	%
		MOC8103	CTR	108	-	173	%
		MOC8104	CTR	160	-	256	%

SWITCHING CHARACTERISTICS (T_{amb} = 25 °C, unless otherwise specified)						
PARAMETER	**TEST CONDITION**	**SYMBOL**	**MIN.**	**TYP.**	**MAX.**	**UNIT**
Turn-on time	V_{CC} = 10 V, I_C = 2.0 mA, R_L = 100 Ω	t_{on}	-	3.0	-	µs
Turn-off time	V_{CC} = 10 V, I_C = 2.0 mA, R_L = 100 Ω	t_{off}	-	2.3	-	µs
Rise time	V_{CC} = 10 V, I_C = 2.0 mA, R_L = 100 Ω	t_r	-	2.0	-	µs
Fall time	V_{CC} = 10 V, I_C = 2.0 mA, R_L = 100 Ω	t_f	-	2.0	-	µs
Cut off frequency		f_{co}	-	250	-	kHz

SAFETY AND INSULATION RATINGS				
PARAMETER	**TEST CONDITION**	**SYMBOL**	**VALUE**	**UNIT**
Climatic classification	According to IEC 68 part 1		55 / 100 / 21	
Comparative tracking index		CTI	175	
Maximum rated withstanding isolation voltage	t = 1 min	V_{ISO}	4420	V_{RMS}
Maximum transient isolation voltage		V_{IOTM}	10 000	V
Maximum repetitive peak isolation voltage		V_{IORM}	890	V
Isolation resistance	V_{IO} = 500 V, T_{amb} = 25 °C	R_{IO}	≥ 10^{12}	Ω
	V_{IO} = 500 V, T_{amb} = 100 °C	R_{IO}	≥ 10^{11}	Ω
Output safety power		P_{SO}	400	mW
Input safety current		I_{SI}	275	mA
Input safety temperature		T_{SI}	175	°C
Creepage distance	Standard DIP-6		≥ 7	mm
Clearance distance	Standard DIP-6		≥ 7	mm
Creepage distance	400 mil DIP-6		≥ 8	mm
Clearance distance	400 mil DIP-6		≥ 8	mm
Insulation thickness		DTI	≥ 0.4	mm

Note

- As per IEC 60747-5-5, § 7.4.3.8.2, this optocoupler is suitable for “safe electrical insulation” only within the safety ratings. Compliance with the safety ratings shall be ensured by means of protective circuits

For technical questions, contact: optocoupleranswers@vishay.com
THIS DOCUMENT IS SUBJECT TO CHANGE WITHOUT NOTICE. THE PRODUCTS DESCRIBED HEREIN AND THIS DOCUMENT ARE SUBJECT TO SPECIFIC DISCLAIMERS, SET FORTH AT www.vishay.com/doc?91000

TYPICAL CHARACTERISTICS (T_{amb} = 25 °C, unless otherwise specified)

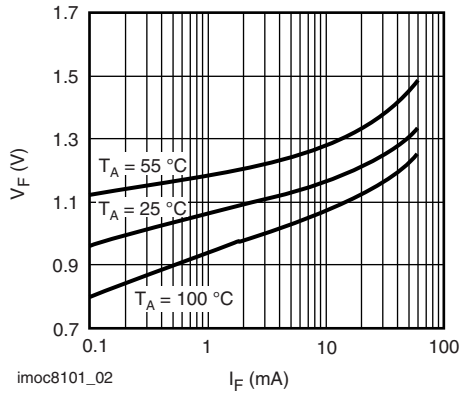

Fig. 1 - Forward Voltage vs. Forward Current

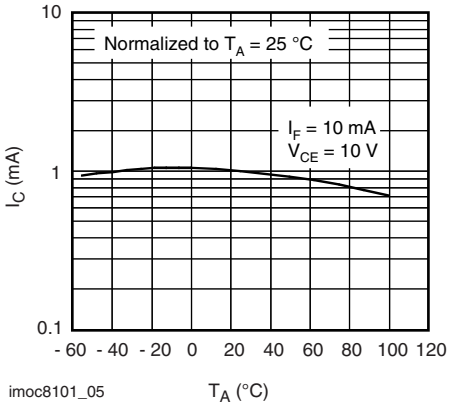

Fig. 4 - Collector Current vs. Ambient Temperature

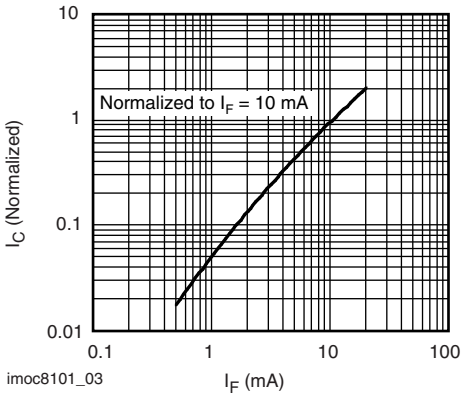

Fig. 2 - Collector Current vs. LED Forward Current

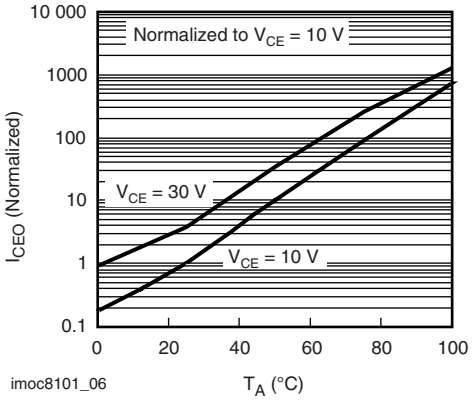

Fig. 5 - Collector Emitter Dark Current vs. Ambient Temperature

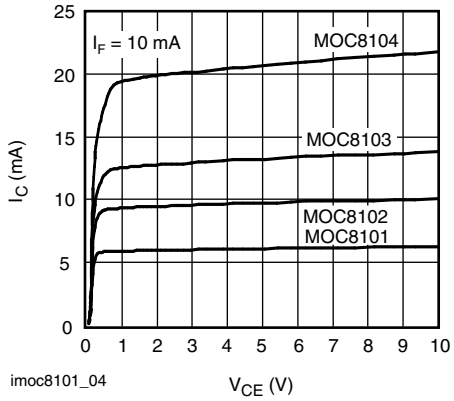

Fig. 3 - Collector Current vs. Collector Emitter Voltage

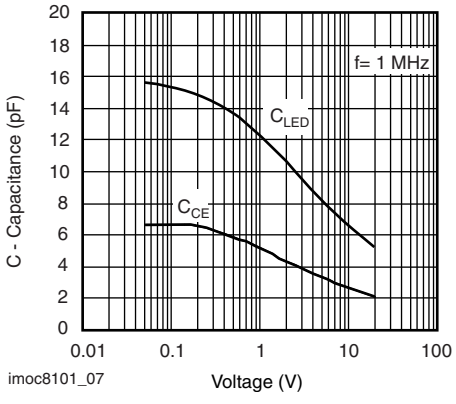

Fig. 6 - Capacitance vs. Voltage

For technical questions, contact: optocoupleranswers@vishay.com
THIS DOCUMENT IS SUBJECT TO CHANGE WITHOUT NOTICE. THE PRODUCTS DESCRIBED HEREIN AND THIS DOCUMENT ARE SUBJECT TO SPECIFIC DISCLAIMERS, SET FORTH AT www.vishay.com/doc?91000

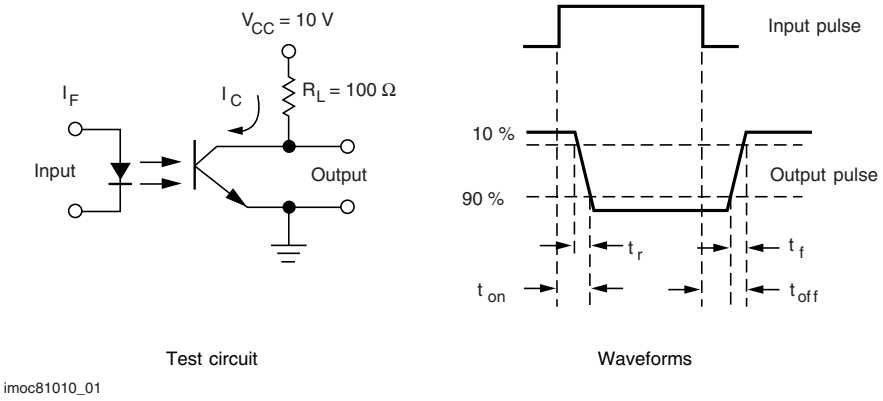

Fig. 7 - Switching Time Test Circuit and Waveforms

PACKAGE DIMENSIONS in millimeters

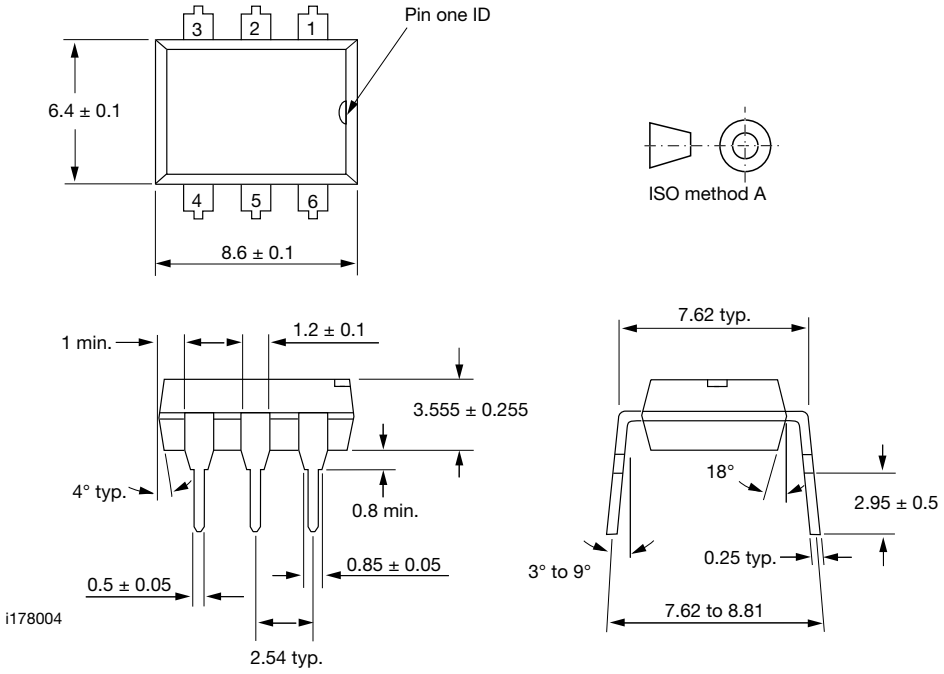

Option 6

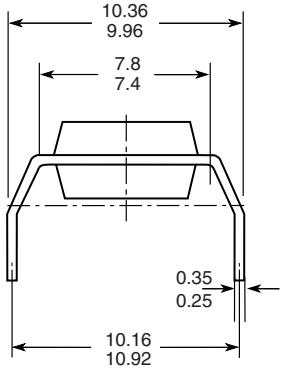

Option 7

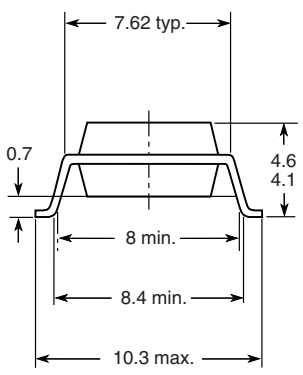

Option 9

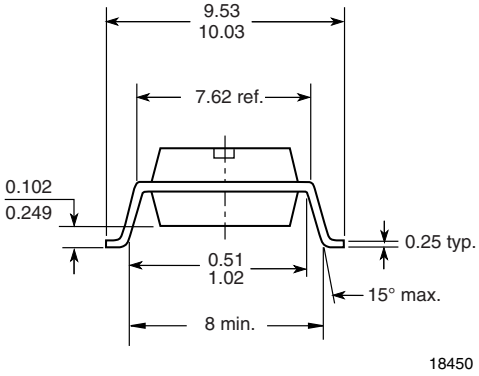

For technical questions, contact: optocoupleranswers@vishay.com
THIS DOCUMENT IS SUBJECT TO CHANGE WITHOUT NOTICE. THE PRODUCTS DESCRIBED HEREIN AND THIS DOCUMENT ARE SUBJECT TO SPECIFIC DISCLAIMERS, SET FORTH AT www.vishay.com/doc?91000

PACKAGE MARKING (example)

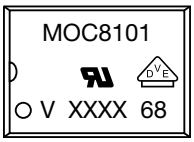

Fig. 8 - Example of MOC8101-X017T

Notes

- XXXX = LMC (lot marking code)
- VDE logo is only marked on option 1 parts
- Tape and reel suffix (T) is not part of the package marking

For technical questions, contact: optocoupleranswers@vishay.com
THIS DOCUMENT IS SUBJECT TO CHANGE WITHOUT NOTICE. THE PRODUCTS DESCRIBED HEREIN AND THIS DOCUMENT ARE SUBJECT TO SPECIFIC DISCLAIMERS, SET FORTH AT www.vishay.com/doc?91000

Disclaimer

ALL PRODUCT, PRODUCT SPECIFICATIONS AND DATA ARE SUBJECT TO CHANGE WITHOUT NOTICE TO IMPROVE RELIABILITY, FUNCTION OR DESIGN OR OTHERWISE.

Vishay Intertechnology, Inc., its affiliates, agents, and employees, and all persons acting on its or their behalf (collectively, “Vishay”), disclaim any and all liability for any errors, inaccuracies or incompleteness contained in any datasheet or in any other disclosure relating to any product.

Vishay makes no warranty, representation or guarantee regarding the suitability of the products for any particular purpose or the continuing production of any product. To the maximum extent permitted by applicable law, Vishay disclaims (i) any and all liability arising out of the application or use of any product, (ii) any and all liability, including without limitation special, consequential or incidental damages, and (iii) any and all implied warranties, including warranties of fitness for particular purpose, non-infringement and merchantability.

Statements regarding the suitability of products for certain types of applications are based on Vishay's knowledge of typical requirements that are often placed on Vishay products in generic applications. Such statements are not binding statements about the suitability of products for a particular application. It is the customer's responsibility to validate that a particular product with the properties described in the product specification is suitable for use in a particular application. Parameters provided in datasheets and / or specifications may vary in different applications and performance may vary over time. All operating parameters, including typical parameters, must be validated for each customer application by the customer's technical experts. Product specifications do not expand or otherwise modify Vishay's terms and conditions of purchase, including but not limited to the warranty expressed therein.

Hyperlinks included in this datasheet may direct users to third-party websites. These links are provided as a convenience and for informational purposes only. Inclusion of these hyperlinks does not constitute an endorsement or an approval by Vishay of any of the products, services or opinions of the corporation, organization or individual associated with the third-party website. Vishay disclaims any and all liability and bears no responsibility for the accuracy, legality or content of the third-party website or for that of subsequent links.

Vishay products are not designed for use in life-saving or life-sustaining applications or any application in which the failure of the Vishay product could result in personal injury or death unless specifically qualified in writing by Vishay. Customers using or selling Vishay products not expressly indicated for use in such applications do so at their own risk. Please contact authorized Vishay personnel to obtain written terms and conditions regarding products designed for such applications.

No license, express or implied, by estoppel or otherwise, to any intellectual property rights is granted by this document or by any conduct of Vishay. Product names and markings noted herein may be trademarks of their respective owners.

© 2024 VISHAY INTERTECHNOLOGY, INC. ALL RIGHTS RESERVED

THIS DOCUMENT IS SUBJECT TO CHANGE WITHOUT NOTICE. THE PRODUCTS DESCRIBED HEREIN AND THIS DOCUMENT ARE SUBJECT TO SPECIFIC DISCLAIMERS, SET FORTH AT www.vishay.com/doc?91000