Optocoupler, Phototransistor Output, High Reliability, 5000 V_{RMS}, 110 °C Rated

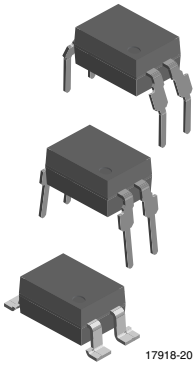

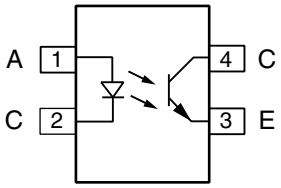

FEATURES

- Operating temperature from - 55 °C to + 110 °C
- Good CTR linearity depending on forward current
- Isolation test voltage, 5000 V_{RMS}
- High collector emitter voltage, V_{CEO} = 70 V
- Low saturation voltage
- Fast switching times
- Low CTR degradation
- Temperature stable
- Low coupling capacitance
- End stackable, 0.100" (2.54 mm) spacing
- High common mode interference immunity
- Material categorization: for definitions of compliance please see www.vishay.com/doc?99912

Pb-free

e3

RoHS COMPLIANT

HALOGEN FREE GREEN (5-2008)

DESCRIPTION

The 110 °C rated SFH1617A (DIP) feature a high current transfer ratio, low coupling capacitance and high isolation voltage. These couplers have a GaAs infrared diode emitter, which is optically coupled to a silicon planar phototransistor detector, and is incorporated in a plastic DIP-4 package.

The coupling devices are designed for signal transmission between two electrically separated circuits.

The couplers are end-stackable with 2.54 mm spacing.

Creepage and clearance distances of > 8.0 mm are achieved with option 6. This version complies with IEC 60950 (DIN VDE 0805) for reinforced insulation up to an operation voltage of 400 V_{RMS} or DC. Specifications subject to change.

APPLICATIONS

- AC adapter
- SMPS
- PLC
- Factory automation
- Game consoles

AGENCY APPROVALS

- UL1577, file no. E52744
- cUL tested to CSA 22.2 bulletin 5A
- DIN EN 60747-5-2 (VDE 0884)/DIN EN 60747-5-5 (pending) available with option 1
- BSI EN 60950; EN 60065
- FIMKO
- CQC (pending)

ORDERING INFORMATION

S	F	H	1	6	1	7	A	-	#	X	0	#	#	T
PART NUMBER									CTR BIN	PACKAGE OPTION				TAPE AND REEL

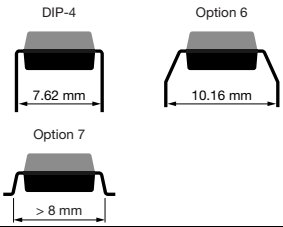

AGENCY CERTIFIED / PACKAGE	CTR (%)			
UL, cUL, BSI, FIMKO	**40 to 80**	**63 to 125**	**100 to 200**	**160 to 320**
DIP-4	-	SFH1617A-2	SFH1617A-3	-
VDE, UL, cUL, BSI, FIMKO	**40 to 80**	**63 to 125**	**100 to 200**	**160 to 320**
DIP-4, 400 mil, option 6	-	-	SFH1617A-3X016	-
SMD-4, option 7	-	SFH1617A-2X017T	-	-

Note

- Additional options may be possible, please contact sales office

For technical questions, contact: optocoupleranswers@vishay.com

THIS DOCUMENT IS SUBJECT TO CHANGE WITHOUT NOTICE. THE PRODUCTS DESCRIBED HEREIN AND THIS DOCUMENT ARE SUBJECT TO SPECIFIC DISCLAIMERS, SET FORTH AT www.vishay.com/doc?91000

ABSOLUTE MAXIMUM RATINGS (T_{amb} = 25 °C, unless otherwise specified)				
PARAMETER	**TEST CONDITION**	**SYMBOL**	**VALUE**	**UNIT**
INPUT				
Reverse voltage		V_R	6.0	V
DC forward current		I_F	60	mA
Surge forward current	t ≤ 10 µs	I_{FSM}	2.5	A
LED power dissipation		P_{diss}	70	mW
OUTPUT				
Collector emitter voltage		V_{CEO}	70	V
Emitter collector voltage		V_{ECO}	7.0	V
Collector current		I_C	50	mA
Collector peak current	t_p/T = 0.5, t_p ≤ 10 ms	I_{CM}	100	mA
Output power dissipation		P_{diss}	150	mW
COUPLER				
Isolation test voltage between emitter and detector, refer to climate DIN 40046, part 2, Nov. 74		V_{ISO}	5000	V_{RMS}
Isolation resistance	V_{IO} = 500 V, T_{amb} = 25 °C	R_{IO}	≥ 10^{12}	Ω
	V_{IO} = 500 V, T_{amb} = 100 °C	R_{IO}	≥ 10^{11}	Ω
Storage temperature range		T_{stg}	-55 to +150	°C
Ambient temperature range		T_{amb}	-55 to +110	°C
Soldering temperature (1)	2 mm from case, ≤ 10 s	T_{sld}	260	°C

Notes

- Stresses in excess of the absolute maximum ratings can cause permanent damage to the device. Functional operation of the device is not implied at these or any other conditions in excess of those given in the operational sections of this document. Exposure to absolute maximum ratings for extended periods of the time can adversely affect reliability

(1) Refer to reflow profile for soldering conditions for surface mounted devices (SMD). Refer to wave profile for soldering conditions for through hole devices (DIP)

ELECTRICAL CHARACTERISTICS (T_{amb} = 25 °C, unless otherwise specified)							
PARAMETER	**TEST CONDITION**	**PART**	**SYMBOL**	**MIN.**	**TYP.**	**MAX.**	**UNIT**
INPUT							
Forward voltage	I_F = 60 mA		V_F	-	1.35	1.65	V
Reverse current	V_R = 6.0 V		I_R	-	0.01	10	µA
Capacitance	V_R = 0 V, f = 1.0 MHz		C_O	-	13	-	pF
OUTPUT							
Collector emitter capacitance	V_{CE} = 5.0 V, f = 1.0 MHz		C_{CE}	-	5.2	-	pF
Collector emitter leakage current	V_{CE} = 10 V	SFH1617A-1	I_{CEO}	-	2.0	50	nA
		SFH1617A-2	I_{CEO}	-	2.0	50	nA
		SFH1617A-3	I_{CEO}	-	5.0	100	nA
		SFH1617A-4	I_{CEO}	-	5.0	100	nA
COUPLER							
Collector emitter saturation voltage	I_F = 10 mA, f = 1.0 MHz		V_{CEsat}	-	0.25	0.4	V
Coupling capacitance			C_C	-	0.4	-	pF

Note

- Minimum and maximum values are testing requirements. Typical values are characteristics of the device and are the result of engineering evaluation. Typical values are for information only and are not part of the testing requirements

For technical questions, contact: optocoupleranswers@vishay.com
THIS DOCUMENT IS SUBJECT TO CHANGE WITHOUT NOTICE. THE PRODUCTS DESCRIBED HEREIN AND THIS DOCUMENT ARE SUBJECT TO SPECIFIC DISCLAIMERS, SET FORTH AT www.vishay.com/doc?91000

CURRENT TRANSFER RATIO (T_{amb} = 25 °C, unless otherwise specified)							
PARAMETER	**TEST CONDITION**	**PART**	**SYMBOL**	**MIN.**	**TYP.**	**MAX.**	**UNIT**
I_C/I_F	I_F = 10 mA, V_{CE} = 5.0 V	SFH1617A-1	CTR	40	-	80	%
		SFH1617A-2	CTR	63	-	125	%
		SFH1617A-3	CTR	100	-	200	%
		SFH1617A-4	CTR	160	-	320	%
	I_F = 1.0 mA, V_{CE} = 5.0 V	SFH1617A-1	CTR	13	30	-	%
		SFH1617A-2	CTR	22	45	-	%
		SFH1617A-3	CTR	34	70	-	%
		SFH1617A-4	CTR	56	90	-	%

SWITCHING CHARACTERISTICS (T_{amb} = 25 °C, unless otherwise specified)							
PARAMETER	**TEST CONDITION**	**PART**	**SYMBOL**	**MIN.**	**TYP.**	**MAX.**	**UNIT**
NON-SATURATED							
Turn-on time	I_F = 10 mA, V_{CC} = 5.0 V, R_L = 75 Ω		t_{on}	-	3.0	-	µs
Rise time	I_F = 10 mA, V_{CC} = 5.0 V, R_L = 75 Ω		t_r	-	2.0	-	µs
Turn-off time	I_F = 10 mA, V_{CC} = 5.0 V, R_L = 75 Ω		t_{off}	-	2.3	-	µs
Fall time	I_F = 10 mA, V_{CC} = 5.0 V, R_L = 75 Ω		t_f	-	2.0	-	µs
Cut-off frequency	I_F = 10 mA, V_{CC} = 5.0 V		f_{ctr}	-	100	-	kHz
SATURATED							
Turn-on time	I_F = 20 mA	SFH1617A-1	t_{on}	-	3.0	-	µs
	I_F = 10 mA	SFH1617A-2	t_{on}	-	4.2	-	µs
		SFH1617A-3	t_{on}	-	4.2	-	µs
	I_F = 5.0 mA	SFH1617A-4	t_{on}	-	6.0	-	µs
Rise time	I_F = 20 mA	SFH1617A-1	t_r	-	2.0	-	µs
	I_F = 10 mA	SFH1617A-2	t_r	-	3.0	-	µs
		SFH1617A-3	t_r	-	3.0	-	µs
	I_F = 5.0 mA	SFH1617A-4	t_r	-	4.6	-	µs
Turn-off time	I_F = 20 mA	SFH1617A-1	t_{off}	-	18	-	µs
	I_F = 10 mA	SFH1617A-2	t_{off}	-	23	-	µs
		SFH1617A-3	t_{off}	-	23	-	µs
	I_F = 5.0 mA	SFH1617A-4	t_{off}	-	25	-	µs
Fall time	I_F = 20 mA	SFH1617A-1	t_f	-	11	-	µs
	I_F = 10 mA	SFH1617A-2	t_f	-	14	-	µs
		SFH1617A-3	t_f	-	14	-	µs
	I_F = 5.0 mA	SFH1617A-4	t_f	-	15	-	µs

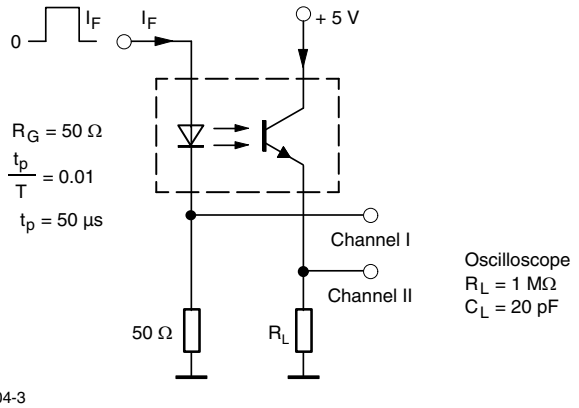

Fig. 1 - Test Circuit, Non-Saturated Operation

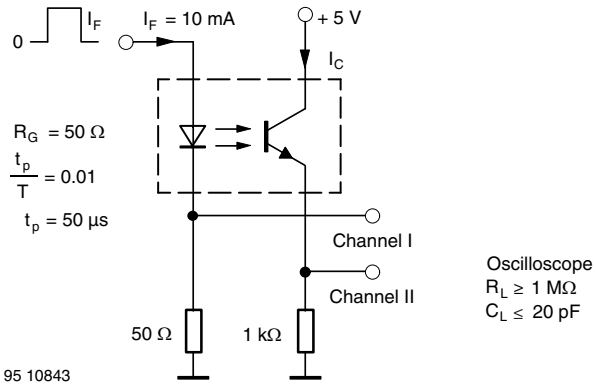

Fig. 2 - Test Circuit, Saturated Operation

For technical questions, contact: optocoupleranswers@vishay.com
THIS DOCUMENT IS SUBJECT TO CHANGE WITHOUT NOTICE. THE PRODUCTS DESCRIBED HEREIN AND THIS DOCUMENT ARE SUBJECT TO SPECIFIC DISCLAIMERS, SET FORTH AT www.vishay.com/doc?91000

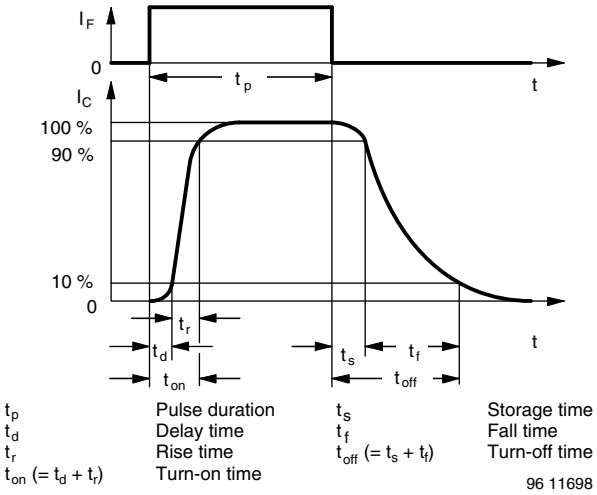

Fig. 3 - Switching Times

SAFETY AND INSULATION RATINGS						
PARAMETER	**TEST CONDITION**	**SYMBOL**	**MIN.**	**TYP.**	**MAX.**	**UNIT**
Climatic classification	According to IEC 68 part 1		-	55 / 110 / 21	-	
Comparative tracking index		CTI	175	-	399	
Rated impulse voltage		V_{IOTM}	-	-	8	kV
Maximum working voltages	Recurring peak voltage	V_{IORM}	-	-	890	V
Forward current		I_{SI}	-	-	275	mA
Power dissipation		P_{SO}	-	-	400	mW
Safety temperature		T_{SI}	-	-	175	°C
Creepage distance			7.0	-	-	mm
Clearance distance			7.0	-	-	mm
Isolation distance	per IEC 60950 2.10.5.1		0.4	-	-	mm

Note

- According to DIN EN 60747-5-2 (VDE 0884). These optocouplers are suitable for “safe electrical insulation” only within the safety ratings. Compliance with the safety ratings shall be ensured by means of protective circuits

For technical questions, contact: optocoupleranswers@vishay.com
THIS DOCUMENT IS SUBJECT TO CHANGE WITHOUT NOTICE. THE PRODUCTS DESCRIBED HEREIN AND THIS DOCUMENT ARE SUBJECT TO SPECIFIC DISCLAIMERS, SET FORTH AT www.vishay.com/doc?91000

TYPICAL CHARACTERISTICS (T_{amb} = 25 °C, unless otherwise specified)

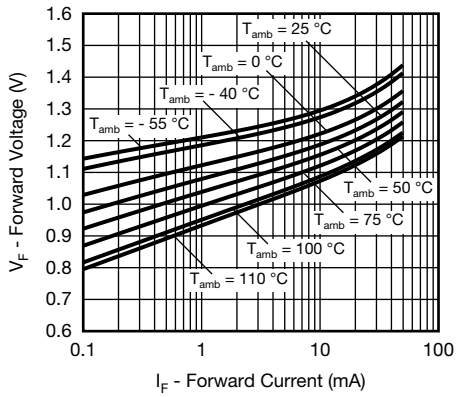

Fig. 4 - Forward Voltage vs. Forward Current

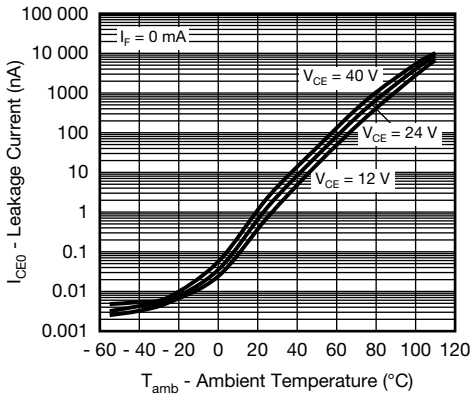

Fig. 7 - Leakage Current vs. Ambient Temperature

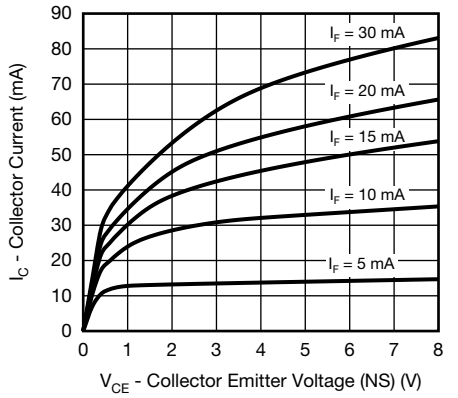

Fig. 5 - Collector Current vs. Collector Emitter Voltage (NS)

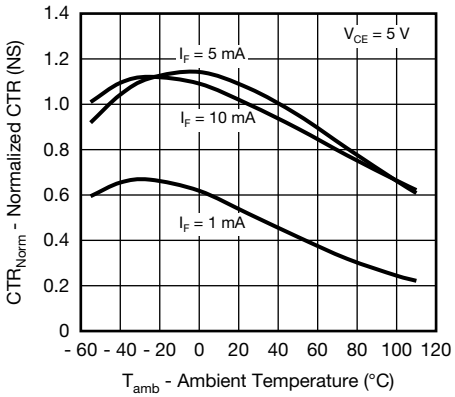

Fig. 8 - Normalized CTR (NS) vs. Ambient Temperature

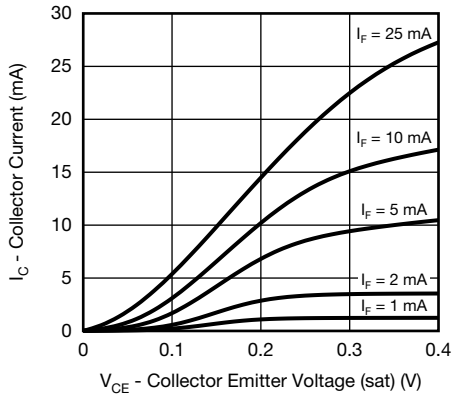

Fig. 6 - Collector Current vs. Collector Emitter Voltage (sat)

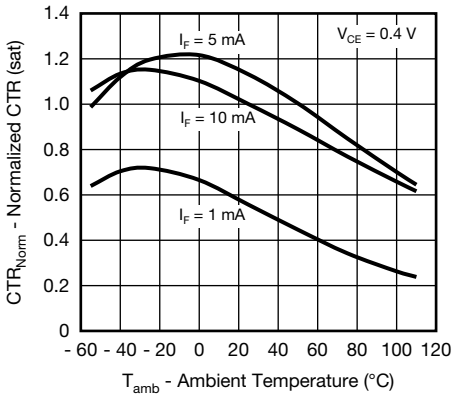

Fig. 9 - Normalized CTR (sat) vs. Ambient Temperature

For technical questions, contact: optocoupleranswers@vishay.com
THIS DOCUMENT IS SUBJECT TO CHANGE WITHOUT NOTICE. THE PRODUCTS DESCRIBED HEREIN AND THIS DOCUMENT ARE SUBJECT TO SPECIFIC DISCLAIMERS, SET FORTH AT www.vishay.com/doc?91000

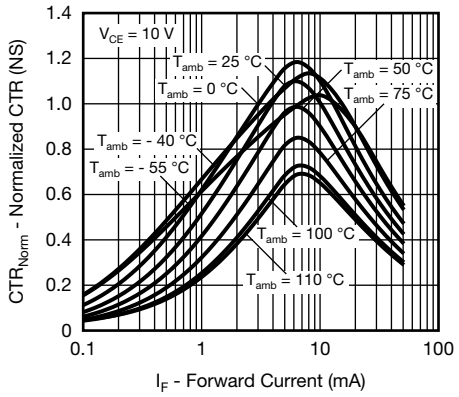

Fig. 10 - Normalized CTR (NS) vs. Forward Current

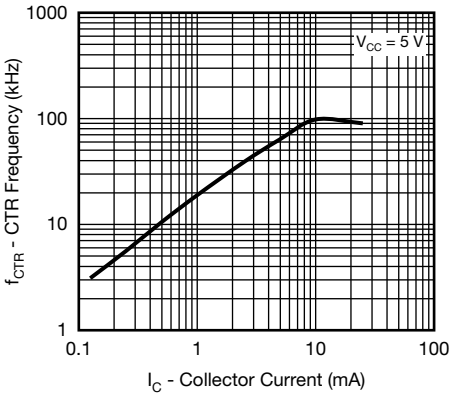

Fig. 13 - CTR Frequency vs. Collector Current

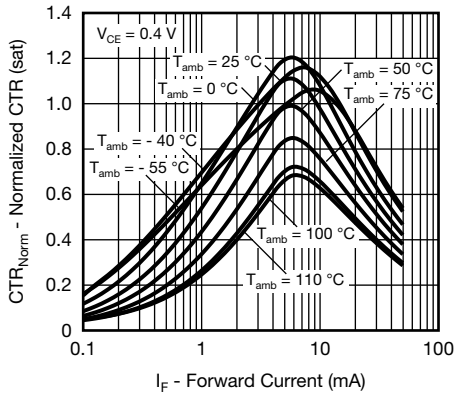

Fig. 11 - Normalized CTR (sat) vs. Forward Current

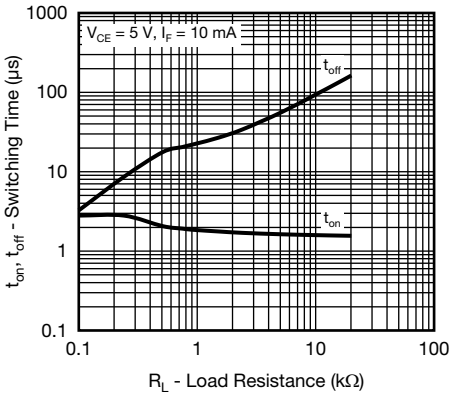

Fig. 14 - Switching Time vs. Load Resistance

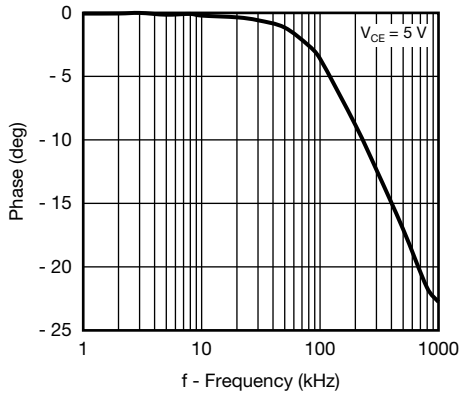

Fig. 12 - CTR Frequency vs. Phase Angle

For technical questions, contact: optocoupleranswers@vishay.com
THIS DOCUMENT IS SUBJECT TO CHANGE WITHOUT NOTICE. THE PRODUCTS DESCRIBED HEREIN AND THIS DOCUMENT ARE SUBJECT TO SPECIFIC DISCLAIMERS, SET FORTH AT www.vishay.com/doc?91000

PACKAGE DIMENISONS in millimeters

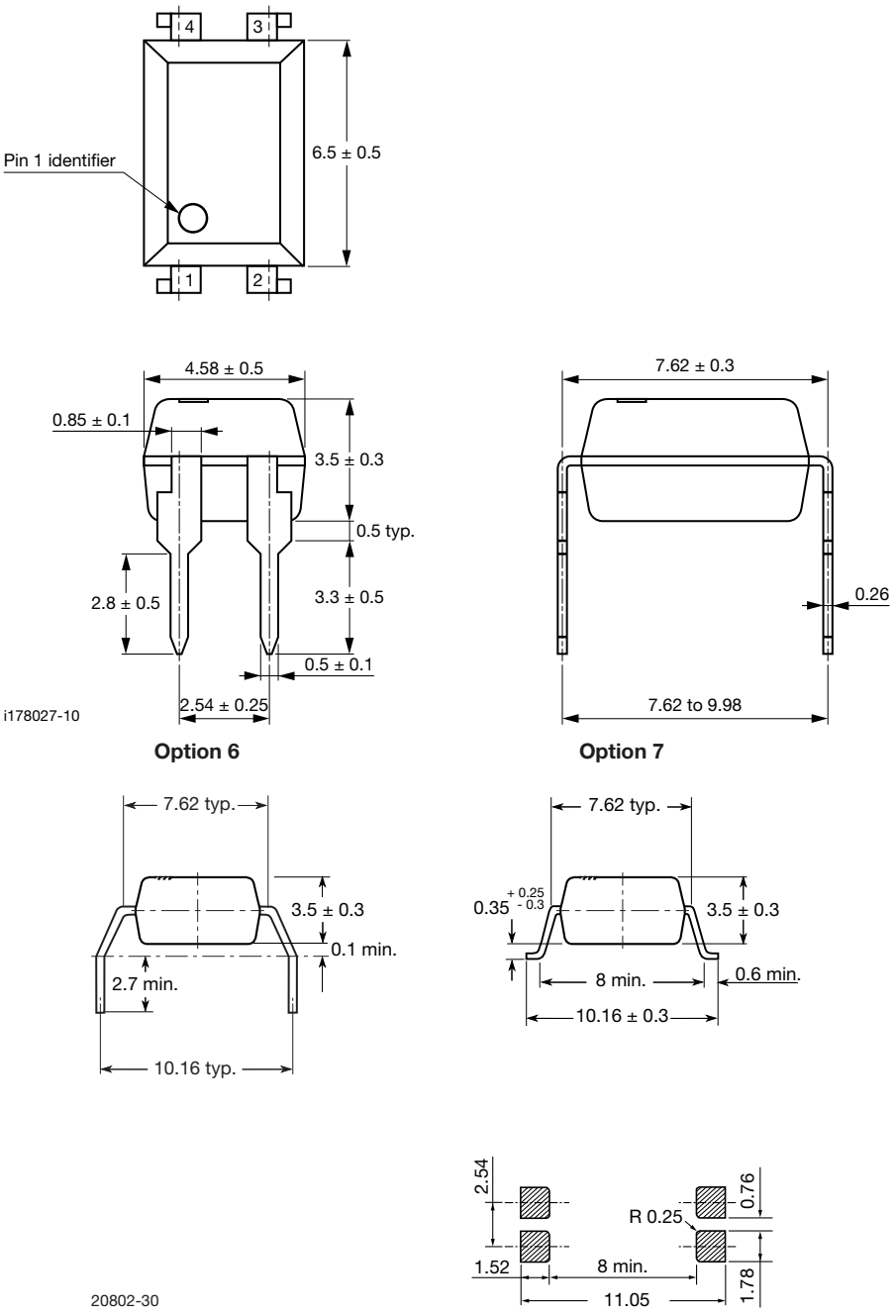

PACKAGE MARKING

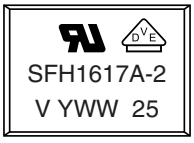

Notes

- VDE logo is only marked on option 1 parts. Option information is not marked on the part
- Tape and reel suffix (T) is not part of the package marking

For technical questions, contact: optocoupleranswers@vishay.com
THIS DOCUMENT IS SUBJECT TO CHANGE WITHOUT NOTICE. THE PRODUCTS DESCRIBED HEREIN AND THIS DOCUMENT ARE SUBJECT TO SPECIFIC DISCLAIMERS, SET FORTH AT www.vishay.com/doc?91000

Disclaimer

ALL PRODUCT, PRODUCT SPECIFICATIONS AND DATA ARE SUBJECT TO CHANGE WITHOUT NOTICE TO IMPROVE RELIABILITY, FUNCTION OR DESIGN OR OTHERWISE.

Vishay Intertechnology, Inc., its affiliates, agents, and employees, and all persons acting on its or their behalf (collectively, “Vishay”), disclaim any and all liability for any errors, inaccuracies or incompleteness contained in any datasheet or in any other disclosure relating to any product.

Vishay makes no warranty, representation or guarantee regarding the suitability of the products for any particular purpose or the continuing production of any product. To the maximum extent permitted by applicable law, Vishay disclaims (i) any and all liability arising out of the application or use of any product, (ii) any and all liability, including without limitation special, consequential or incidental damages, and (iii) any and all implied warranties, including warranties of fitness for particular purpose, non-infringement and merchantability.

Statements regarding the suitability of products for certain types of applications are based on Vishay's knowledge of typical requirements that are often placed on Vishay products in generic applications. Such statements are not binding statements about the suitability of products for a particular application. It is the customer's responsibility to validate that a particular product with the properties described in the product specification is suitable for use in a particular application. Parameters provided in datasheets and / or specifications may vary in different applications and performance may vary over time. All operating parameters, including typical parameters, must be validated for each customer application by the customer's technical experts. Product specifications do not expand or otherwise modify Vishay's terms and conditions of purchase, including but not limited to the warranty expressed therein.

Hyperlinks included in this datasheet may direct users to third-party websites. These links are provided as a convenience and for informational purposes only. Inclusion of these hyperlinks does not constitute an endorsement or an approval by Vishay of any of the products, services or opinions of the corporation, organization or individual associated with the third-party website. Vishay disclaims any and all liability and bears no responsibility for the accuracy, legality or content of the third-party website or for that of subsequent links.

Vishay products are not designed for use in life-saving or life-sustaining applications or any application in which the failure of the Vishay product could result in personal injury or death unless specifically qualified in writing by Vishay. Customers using or selling Vishay products not expressly indicated for use in such applications do so at their own risk. Please contact authorized Vishay personnel to obtain written terms and conditions regarding products designed for such applications.

No license, express or implied, by estoppel or otherwise, to any intellectual property rights is granted by this document or by any conduct of Vishay. Product names and markings noted herein may be trademarks of their respective owners.

© 2024 VISHAY INTERTECHNOLOGY, INC. ALL RIGHTS RESERVED

THIS DOCUMENT IS SUBJECT TO CHANGE WITHOUT NOTICE. THE PRODUCTS DESCRIBED HEREIN AND THIS DOCUMENT ARE SUBJECT TO SPECIFIC DISCLAIMERS, SET FORTH AT www.vishay.com/doc?91000