# High Speed Optocoupler, 1 MBd, Transistor Output

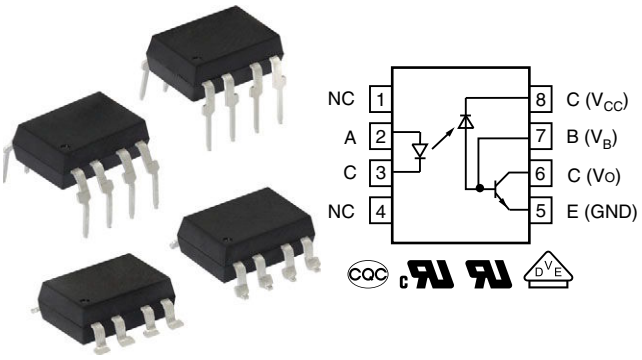


## FEATURES

- Isolation test voltage 5300 $V_{RMS}$
- TTL compatible
- High bit rates: 1 MBit/s
- High common mode interference immunity
- Bandwidth 2 MHz
- Open collector output
- External base wiring possible
- Material categorization: for definitions of compliance please see www.vishay.com/doc?99912

Pb-free

e3

RoHS COMPLIANT

## LINKS TO ADDITIONAL RESOURCES

Related Documents | Design Tools | 3D Models | Footprints | Schematics | SPICE Models

## AGENCY APPROVALS

- UL
- cUL
- DIN EN 60747-5-5 (VDE 0884-5), available with option 1
- CQC

## DESCRIPTION

The SFH6135 and SFH6136 optocouplers feature a high signal transmission rate and a high isolation resistance. They have a GaAlAs infrared emitting diode, optically coupled with an integrated photo detector which consists of a photo diode and a high-speed transistor in a DIP-8 plastic package. Signals can be transmitted between two electrically separated circuits up to frequencies of 2 MHz. The potential difference between the circuits to be coupled should not exceed the maximum permissible reference voltages.

## ORDERING INFORMATION

| S | F | H | 6 | 1 | 3 | # | - | X | 0 | # | # | T |
|---|---|---|---|---|---|---|---|---|---|---|---|---|
| PART NUMBER | | | | | | | | PACKAGE OPTION | | | | TAPE AND REEL |

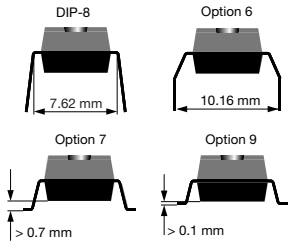


| AGENCY CERTIFIED / PACKAGE | CTR (%) | |
|---|---|---|
| **UL, cUL, CQC** | ≥ **7** | ≥ **19** |
| DIP-8 | SFH6135 | SFH6136 |
| SMD-8, option 9 | - | SFH6136-X009T |
| **UL, cUL, CQC, VDE (option 1)** | ≥ **7** | ≥ **19** |
| DIP-8 | - | SFH6136-X001 |
| DIP-8, 400 mil, option 6 | - | SFH6136-X016 |
| SMD-8, option 7 | - | SFH6136-X017T (1) |

**Notes**

- Additional options may be possible, please contact sales office

(1) Also available in tubes; do not add T to end



For technical questions, contact: optocoupleranswers@vishay.com

THIS DOCUMENT IS SUBJECT TO CHANGE WITHOUT NOTICE. THE PRODUCTS DESCRIBED HEREIN AND THIS DOCUMENT ARE SUBJECT TO SPECIFIC DISCLAIMERS, SET FORTH AT www.vishay.com/doc?91000

| **ABSOLUTE MAXIMUM RATINGS** ($T_{amb}$ = 25 °C, unless otherwise specified) | | | | |
|---|---|---|---|---|
| **PARAMETER** | **TEST CONDITION** | **SYMBOL** | **VALUE** | **UNIT** |
| **INPUT** | | | | |
| Reverse voltage | | $V_R$ | 3 | V |
| Forward current | | $I_F$ | 25 | mA |
| Peak forward current | t = 1 ms, duty cycle 50 % | $I_{FM}$ | 50 | mA |
| Maximum surge forward current | t ≤ 1 µs, 300 pulses/s | $I_{FSM}$ | 1 | A |
| Thermal resistance | | $R_{thja}$ | 700 | K/W |
| Power dissipation | | $P_{diss}$ | 45 | mW |
| **OUTPUT** | | | | |
| Supply voltage | | $V_S$ | -0.5 to 30 | V |
| Output voltage | | $V_O$ | -0.5 to 25 | V |
| Emitter base voltage | | $V_{EBO}$ | 5 | V |
| Output current | | $I_O$ | 8 | mA |
| Maximum output current | | $I_O$ | 16 | mA |
| Base current | | $I_B$ | 5 | mA |
| Thermal resistance | | $R_{thja}$ | 300 | K/W |
| Power dissipation | $T_{amb}$ = 70 °C | $P_{diss}$ | 100 | mW |
| **COUPLER** | | | | |
| Isolation test voltage | | $V_{ISO}$ | 5300 | $V_{RMS}$ |
| Pollution degree (DIN VDE 0110) | | | 2 | |
| Isolation resistance | $V_{IO}$ = 500 V, $T_{amb}$ = 25 °C | $R_{IO}$ | ≥ $10^{12}$ | Ω |
| | $V_{IO}$ = 500 V, $T_{amb}$ = 100 °C | $R_{IO}$ | ≥ $10^{11}$ | Ω |
| Storage temperature range | | $T_{stg}$ | -55 to +125 | °C |
| Ambient temperature range | | $T_{amb}$ | -55 to +100 | °C |
| Soldering temperature (1) | Max. ≤ 10 s, dip soldering ≥ 0.5 mm distance from case bottom | $T_{sld}$ | 260 | °C |

**Notes**

- Stresses in excess of the absolute maximum ratings can cause permanent damage to the device. Functional operation of the device is not implied at these or any other conditions in excess of those given in the operational sections of this document. Exposure to absolute maximum ratings for extended periods of the time can adversely affect reliability.

(1) Refer to wave profile for soldering conditions for through hole devices

| **ELECTRICAL CHARACTERISTICS** ($T_{amb}$ = 25 °C, unless otherwise specified) | | | | | | | |
|---|---|---|---|---|---|---|---|
| **PARAMETER** | **TEST CONDITION** | **PART** | **SYMBOL** | **MIN.** | **TYP.** | **MAX.** | **UNIT** |
| **INPUT** | | | | | | | |
| Forward voltage | $I_F$ = 16 mA | | $V_F$ | - | 1.6 | 1.9 | V |
| Breakdown voltage | $I_R$ = 10 µA | | $V_{BR}$ | 3 | - | - | V |
| Reverse current | $V_R$ = 3 V | | $I_R$ | - | 0.5 | 10 | µA |
| Capacitance | $V_R$ = 0 V, f = 1 MHz | | $C_O$ | - | 125 | - | pF |
| Temperature coefficient of forward voltage | $I_F$ = 16 mA | | $\Delta V_F/\Delta T_{amb}$ | - | 1.7 | - | mV/°C |
| **OUTPUT** | | | | | | | |
| Logic low supply current | $I_F$ = 16 mA, $V_O$ = open, $V_{CC}$ = 15 V | | $I_{CCL}$ | - | 150 | - | µA |
| Logic high supply current | $I_F$ = 0 V, $V_O$ = open, $V_{CC}$ = 15 V | | $I_{CCH}$ | - | 0.01 | 1 | µA |
| Output voltage, output low | $I_F$ = 16 mA, $V_{CC}$ = 4.5 V, $I_O$ = 1.1 mA | SFH6135 | $V_{OL}$ | - | 0.1 | 0.4 | V |
| | $I_F$ = 16 mA, $V_{CC}$ = 4.5 V, $I_O$ = 2.4 mA | SFH6136 | $V_{OL}$ | - | 0.1 | 0.4 | V |
| Output current, output high | $I_F$ = 0 mA, $V_O$ = $V_{CC}$ = 5.5 V | | $I_{OH}$ | - | 3 | 500 | nA |
| | $I_F$ = 0 mA, $V_O$ = $V_{CC}$ =15 V | | $I_{OH}$ | - | 0.01 | 1 | µA |


For technical questions, contact: optocoupleranswers@vishay.com
THIS DOCUMENT IS SUBJECT TO CHANGE WITHOUT NOTICE. THE PRODUCTS DESCRIBED HEREIN AND THIS DOCUMENT ARE SUBJECT TO SPECIFIC DISCLAIMERS, SET FORTH AT www.vishay.com/doc?91000

| ELECTRICAL CHARACTERISTICS ($T_{amb}$ = 25 °C, unless otherwise specified) | | | | | | | |
|---|---|---|---|---|---|---|---|
| **PARAMETER** | **TEST CONDITION** | **PART** | **SYMBOL** | **MIN.** | **TYP.** | **MAX.** | **UNIT** |
| **COUPLER** | | | | | | | |
| Capacitance (input to output) | f = 1 MHz | | $C_{IO}$ | - | 0.6 | - | pF |

**Note**

- Minimum and maximum values are testing requirements. Typical values are characteristics of the device and are the result of engineering evaluation. Typical values are for information only and are not part of the testing requirements.

| CURRENT TRANSFER RATIO | | | | | | | |
|---|---|---|---|---|---|---|---|
| **PARAMETER** | **TEST CONDITION** | **PART** | **SYMBOL** | **MIN.** | **TYP.** | **MAX.** | **UNIT** |
| Current transfer ratio | $I_F$ = 16 mA, $V_O$ = 0.4 V, $V_{CC}$ = 4.5 V | SFH6135 | CTR | 7 | 16 | - | % |
| | | SFH6136 | CTR | 19 | 35 | - | % |
| | $I_F$ = 16 mA, $V_O$ = 0.5 V, $V_{CC}$ = 4.5 V | SFH6135 | CTR | 5 | - | - | % |
| | | SFH6136 | CTR | 15 | - | - | % |

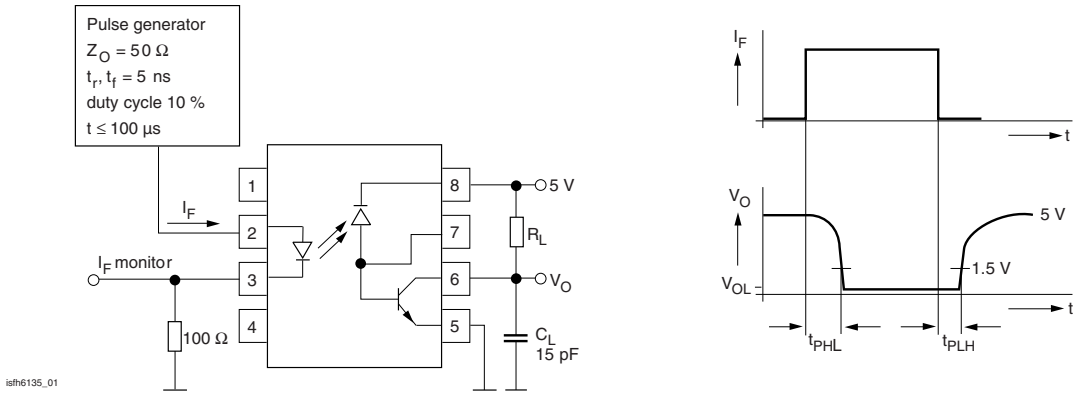


Fig. 1 - Schematics

| SWITCHING CHARACTERISTICS | | | | | | | |
|---|---|---|---|---|---|---|---|
| **PARAMETER** | **TEST CONDITION** | **PART** | **SYMBOL** | **MIN.** | **TYP.** | **MAX.** | **UNIT** |
| High to low | $I_F$ = 16 mA, $V_{CC}$ = 5 V, $R_L$ = 4.1 kΩ | SFH6135 | $t_{PHL}$ | - | 0.3 | 1.5 | µs |
| | $I_F$ = 16 mA, $V_{CC}$ = 5 V, $R_L$ = 1.9 kΩ | SFH6136 | $t_{PHL}$ | - | 0.2 | 0.8 | µs |
| Low to high | $I_F$ = 16 mA, $V_{CC}$ = 5 V, $R_L$ = 4.1 kΩ | SFH6135 | $t_{PLH}$ | - | 0.3 | 1.5 | µs |
| | $I_F$ = 16 mA, $V_{CC}$ = 5 V, $R_L$ = 1.9 kΩ | SFH6136 | $t_{PLH}$ | - | 0.2 | 0.8 | µs |

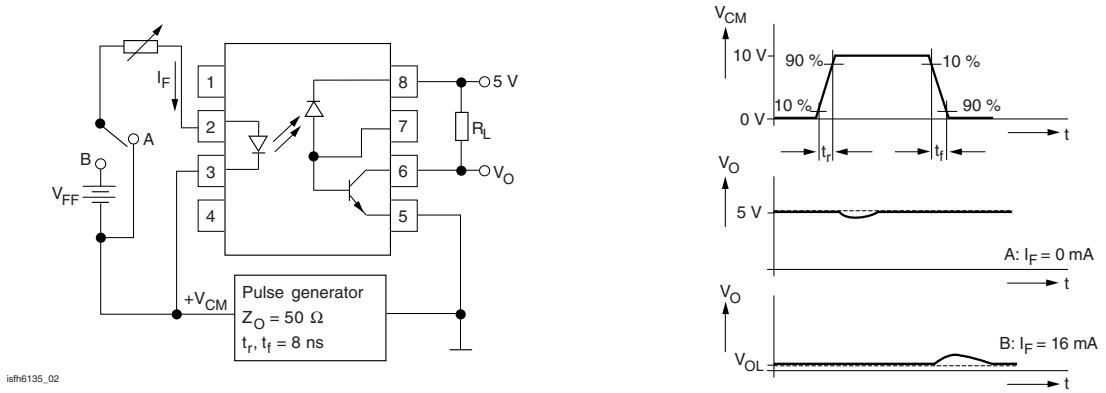


Fig. 2 - Common Mode Interference Immunity



For technical questions, contact: optocoupleranswers@vishay.com

THIS DOCUMENT IS SUBJECT TO CHANGE WITHOUT NOTICE. THE PRODUCTS DESCRIBED HEREIN AND THIS DOCUMENT ARE SUBJECT TO SPECIFIC DISCLAIMERS, SET FORTH AT www.vishay.com/doc?91000

| COMMON MODE TRANSIENT IMMUNITY | | | | | | | |
|---|---|---|---|---|---|---|---|
| **PARAMETER** | **TEST CONDITION** | **PART** | **SYMBOL** | **MIN.** | **TYP.** | **MAX.** | **UNIT** |
| High | $V_{CM}$ = 10 $V_{P-P}$, $V_{CC}$ = 5 V, $I_F$ = 0 mA, $R_L$ = 4.1 kΩ | SFH6135 | $CM_H$ | - | 1000 | - | V/µs |
| | $V_{CM}$ = 10 $V_{P-P}$, $V_{CC}$ = 5 V, $I_F$ = 0 mA, $R_L$ = 1.9 kΩ | SFH6136 | $CM_H$ | - | 1000 | - | V/µs |
| Low | $V_{CM}$ = 10 $V_{P-P}$, $V_{CC}$ = 5 V, $I_F$ = 0 mA, $R_L$ = 4.1 kΩ | SFH6135 | $CM_L$ | - | 1000 | - | V/µs |
| | $V_{CM}$ = 10 $V_{P-P}$, $V_{CC}$ = 5 V, $I_F$ = 0 mA, $R_L$ = 1.9 kΩ | SFH6136 | $CM_L$ | - | 1000 | - | V/µs |

| SAFETY AND INSULATION RATINGS | | | | | | |
|---|---|---|---|---|---|---|
| **PARAMETER** | **TEST CONDITION** | **SYMBOL** | **MIN.** | **TYP.** | **MAX.** | **UNIT** |
| Climatic classification (according to IEC 68 part 1) | | | - | 55 / 100 / 21 | - | |
| Comparative tracking index | | CTI | 175 | - | 399 | |
| $V_{IOTM}$ | | | 8000 | - | - | V |
| $V_{IORM}$ | | | 890 | - | - | V |
| $P_{SO}$ | | | - | - | 500 | mW |
| $I_{SI}$ | | | - | - | 300 | mA |
| $T_{SI}$ | | | - | - | 175 | °C |
| Creepage distance | Standard DIP-8 | | 7 | - | - | mm |
| Clearance distance | Standard DIP-8 | | 7 | - | - | mm |
| Creepage distance | 400 mil DIP-8 | | 8 | - | - | mm |
| Clearance distance | 400 mil DIP-8 | | 8 | - | - | mm |

**Note**

- As per IEC 60747-5-5, §7.4.3.8.1, this optocoupler is suitable for “safe electrical insulation” only within the safety ratings. Compliance with the safety ratings shall be ensured by means of protective circuits.

## TYPICAL CHARACTERISTICS ($T_{amb}$ = 25 °C, unless otherwise specified)

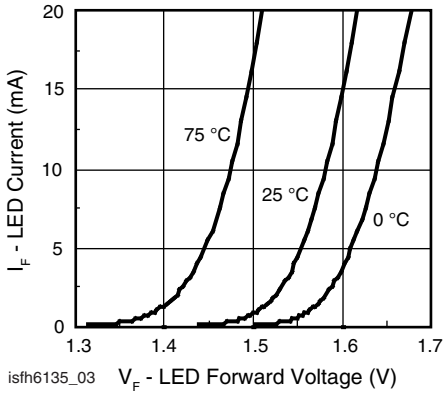


Fig. 3 - LED Forward Current vs. Forward Voltage

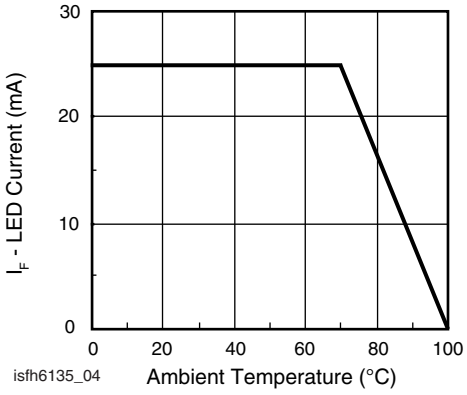


Fig. 4 - Permissible Forward LED Current vs. Temperature


For technical questions, contact: optocoupleranswers@vishay.com
THIS DOCUMENT IS SUBJECT TO CHANGE WITHOUT NOTICE. THE PRODUCTS DESCRIBED HEREIN AND THIS DOCUMENT ARE SUBJECT TO SPECIFIC DISCLAIMERS, SET FORTH AT www.vishay.com/doc?91000

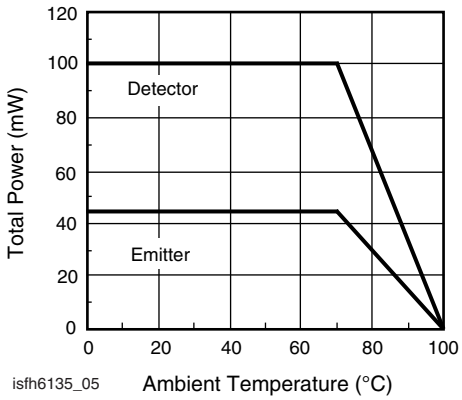


Fig. 5 - Permissible Power Dissipation vs. Temperature

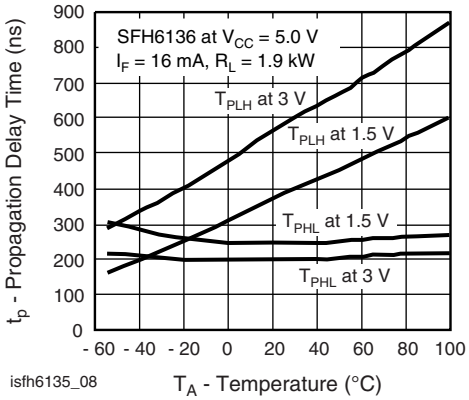


Fig. 8 - Propagation Delay vs. Ambient Temperature - SFH6136

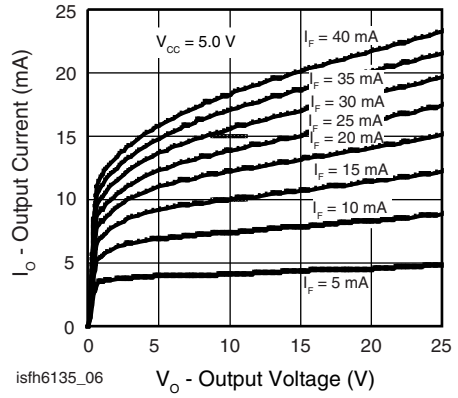


Fig. 6 - Output Current vs. Output Voltage

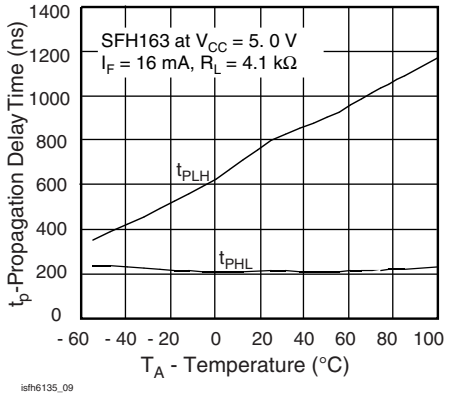


Fig. 9 - Propagation Delay vs. Ambient Temperature - SFH6135

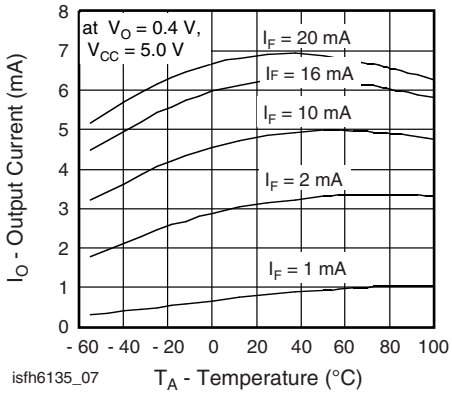


Fig. 7 - Output Current vs. Temperature

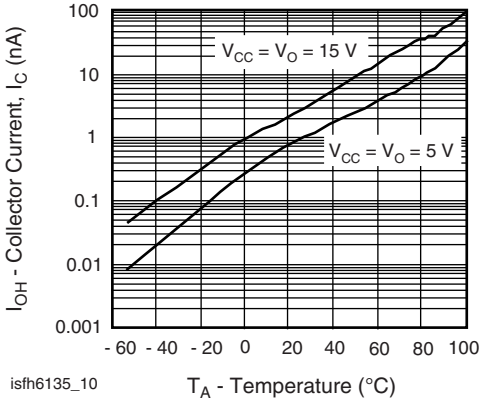


Fig. 10 - Logic High Output Current vs. Temperature


For technical questions, contact: optocoupleranswers@vishay.com
THIS DOCUMENT IS SUBJECT TO CHANGE WITHOUT NOTICE. THE PRODUCTS DESCRIBED HEREIN AND THIS DOCUMENT ARE SUBJECT TO SPECIFIC DISCLAIMERS, SET FORTH AT www.vishay.com/doc?91000

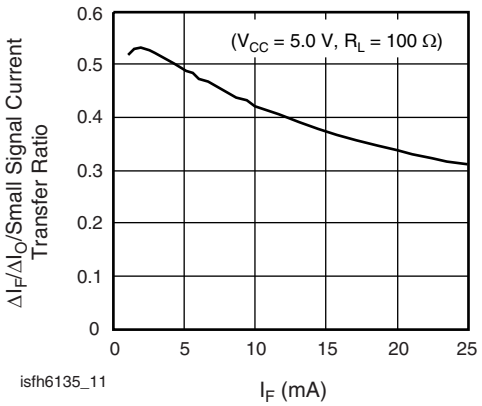


Fig. 11 - Small Signal Current Transfer Ratio vs. Quiescent Input Current

## PACKAGE DIMENSIONS (in millimeters)

### DIP-8

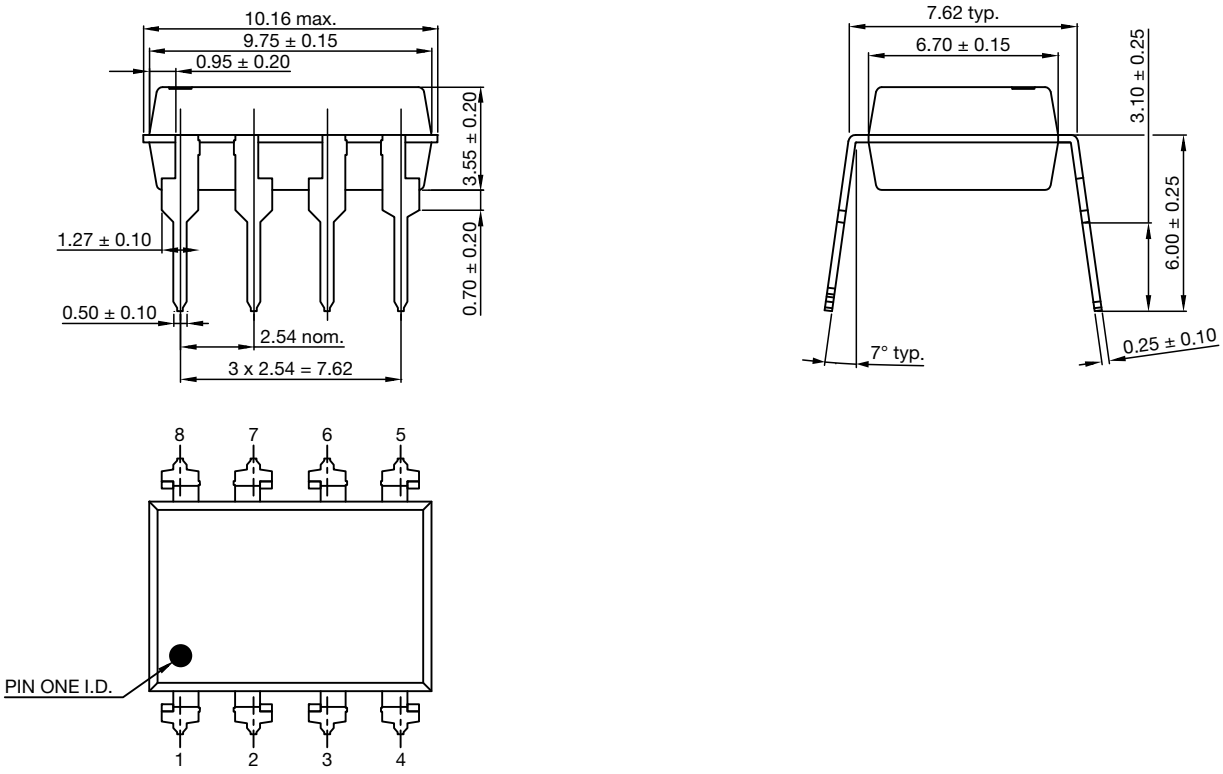



For technical questions, contact: optocoupleranswers@vishay.com
THIS DOCUMENT IS SUBJECT TO CHANGE WITHOUT NOTICE. THE PRODUCTS DESCRIBED HEREIN AND THIS DOCUMENT ARE SUBJECT TO SPECIFIC DISCLAIMERS, SET FORTH AT www.vishay.com/doc?91000

**DIP-8, 400 mil (option 6)**

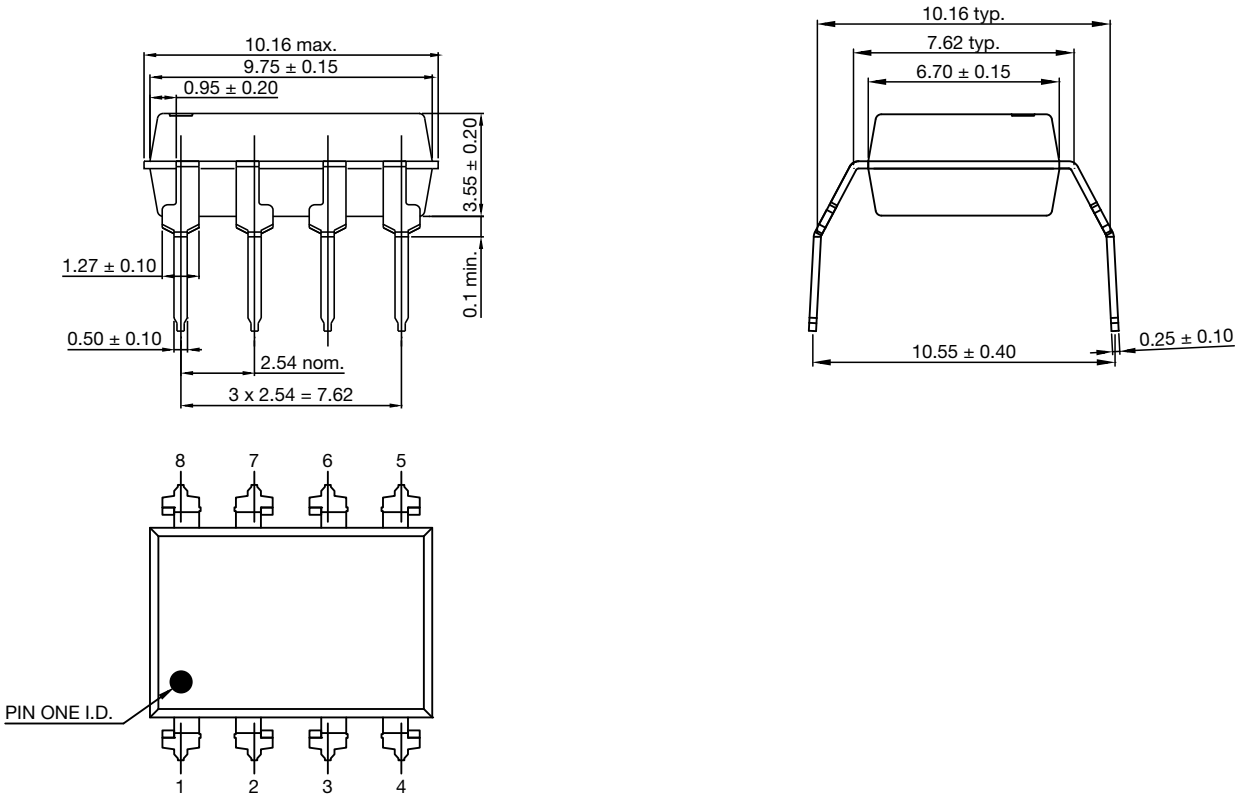


**SMD-8 (option 7)**

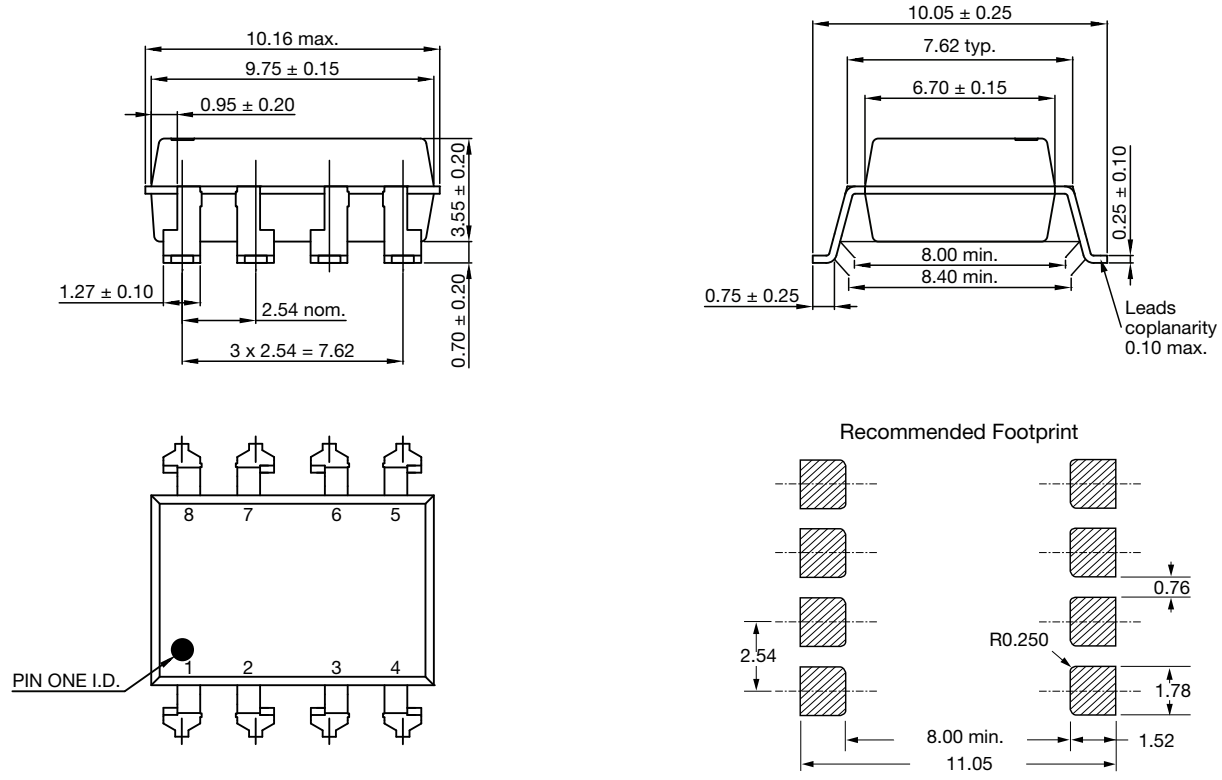



For technical questions, contact: optocoupleranswers@vishay.com
THIS DOCUMENT IS SUBJECT TO CHANGE WITHOUT NOTICE. THE PRODUCTS DESCRIBED HEREIN AND THIS DOCUMENT ARE SUBJECT TO SPECIFIC DISCLAIMERS, SET FORTH AT www.vishay.com/doc?91000

**SMD-8 (option 9)**

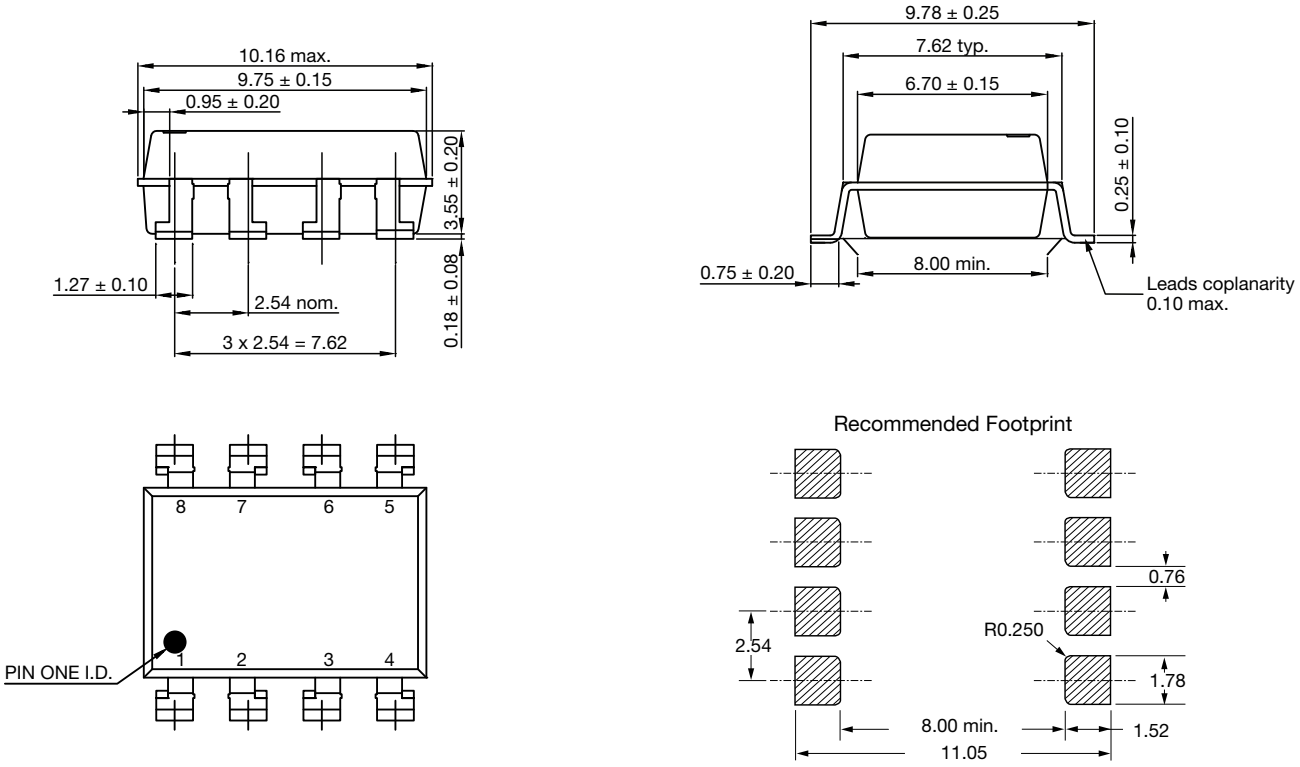


## PACKAGE MARKING

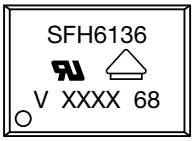


Fig. 12 - Example of SFH6136-X017T

**Notes**

- XXXX = LMC (lot marking code)
- VDE logo is only marked on option 1 parts
- Tape and reel suffix (T) is not part of the package marking


For technical questions, contact: optocoupleranswers@vishay.com
THIS DOCUMENT IS SUBJECT TO CHANGE WITHOUT NOTICE. THE PRODUCTS DESCRIBED HEREIN AND THIS DOCUMENT ARE SUBJECT TO SPECIFIC DISCLAIMERS, SET FORTH AT www.vishay.com/doc?91000

## PACKING INFORMATION (in millimeters)

### Tube

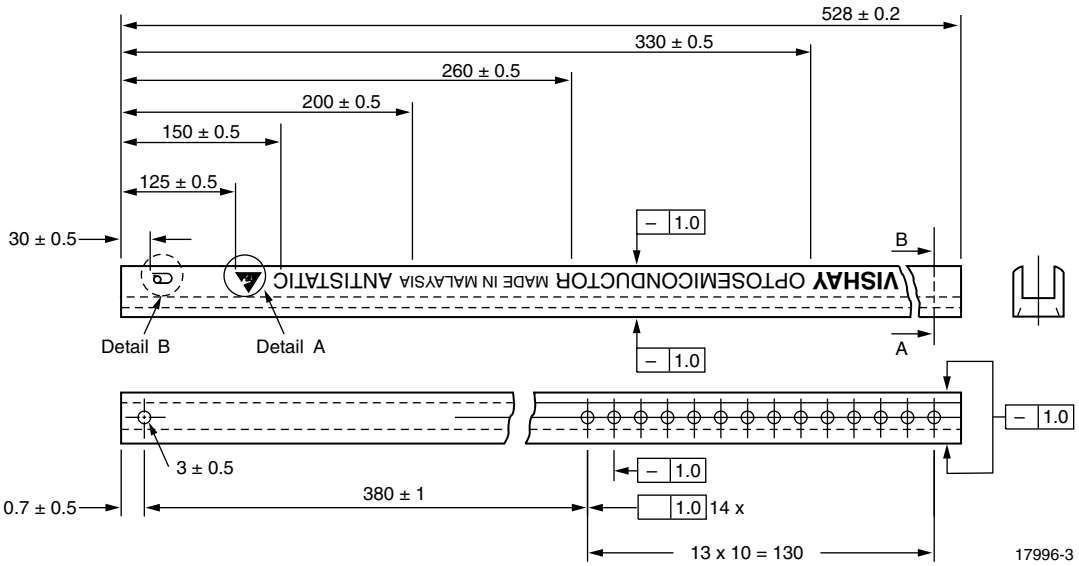


Fig. 13 - Shipping Tube Specifications for DIP-8 Packages

| DEVICES PER TUBS | | | |
|---|---|---|---|
| **TYPE** | **UNITS/TUBE** | **TUBES/BOX** | **UNITS/BOX** |
| DIP-8 | 50 | 40 | 2000 |

### DIP-8

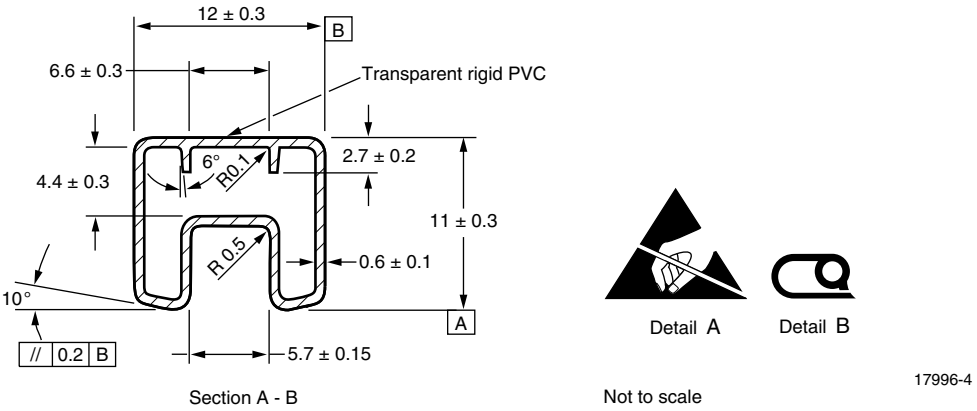


Fig. 14 - Tube Shipping Medium


For technical questions, contact: optocoupleranswers@vishay.com
THIS DOCUMENT IS SUBJECT TO CHANGE WITHOUT NOTICE. THE PRODUCTS DESCRIBED HEREIN AND THIS DOCUMENT ARE SUBJECT TO SPECIFIC DISCLAIMERS, SET FORTH AT www.vishay.com/doc?91000

**DIP-8, 400 mil (option 6)**

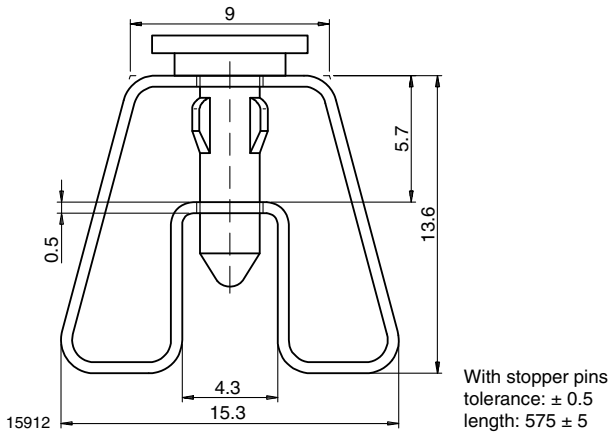


Fig. 15 - Tube Shipping Medium

**Tape and Reel**

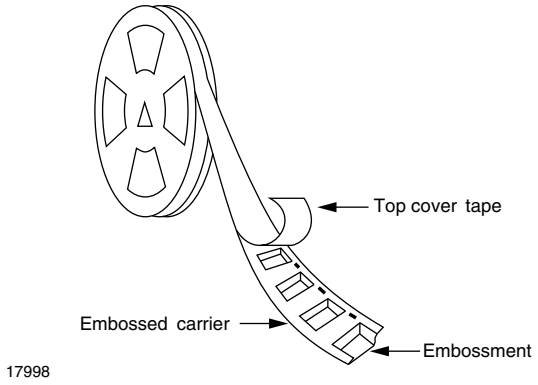


Fig. 16 - Tape and Reel Shipping Medium

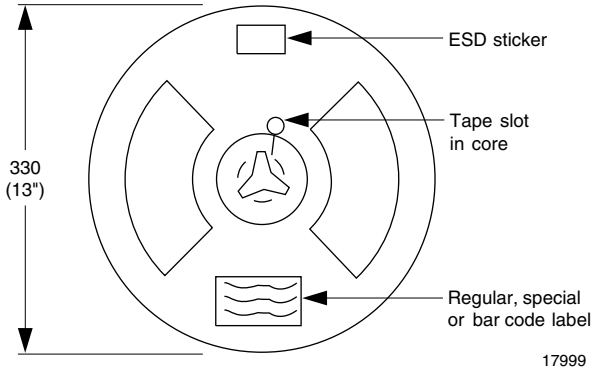


Fig. 17 - Tape and Reel Shipping Medium

**SMD-8 (option 7)**

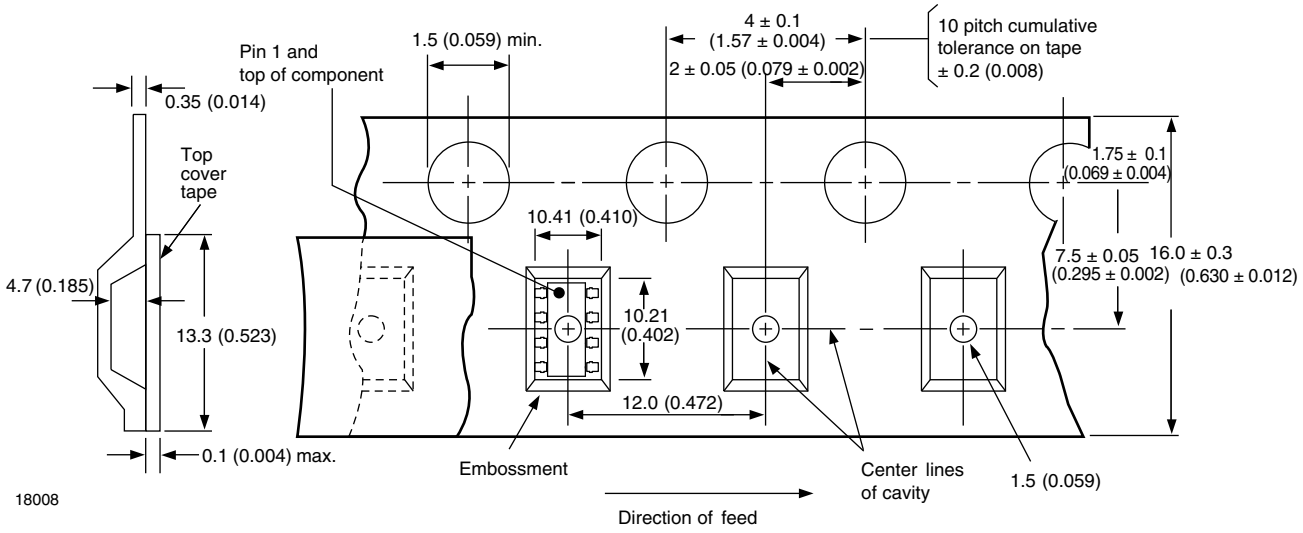


Fig. 18 - Tape and Reel Packing (1000 pieces on Reel)


For technical questions, contact: optocoupleranswers@vishay.com
THIS DOCUMENT IS SUBJECT TO CHANGE WITHOUT NOTICE. THE PRODUCTS DESCRIBED HEREIN AND THIS DOCUMENT ARE SUBJECT TO SPECIFIC DISCLAIMERS, SET FORTH AT www.vishay.com/doc?91000

**SMD-8 (option 9)**

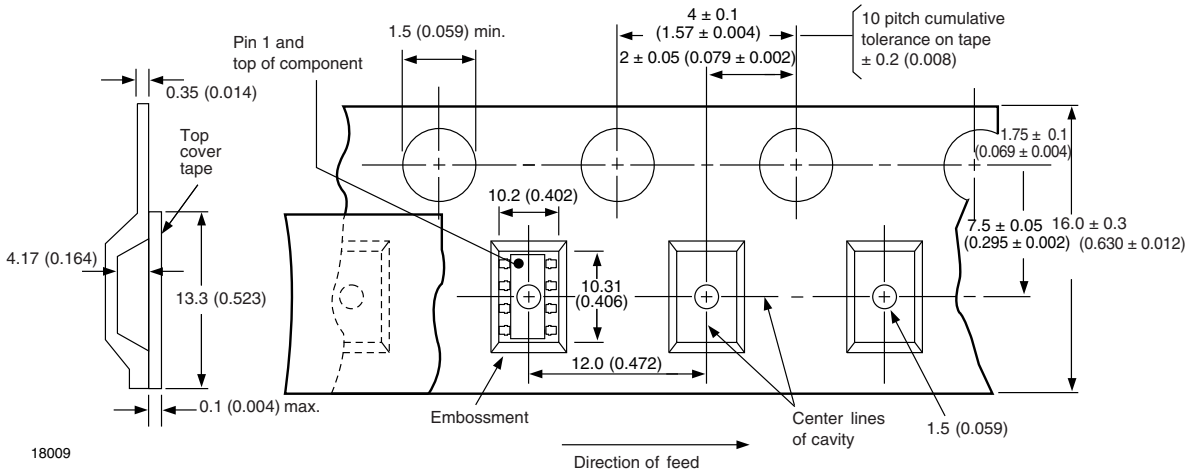


Fig. 19 - Tape and Reel Shipping Medium

## SOLDER PROFILES

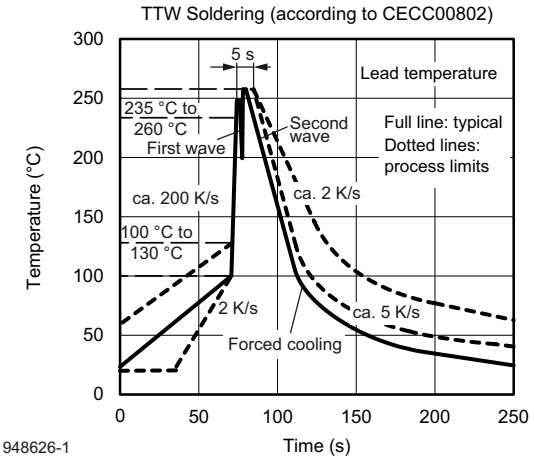


Fig. 20 - Wave Soldering Double Wave Profile According to J-STD-020 for DIP Devices

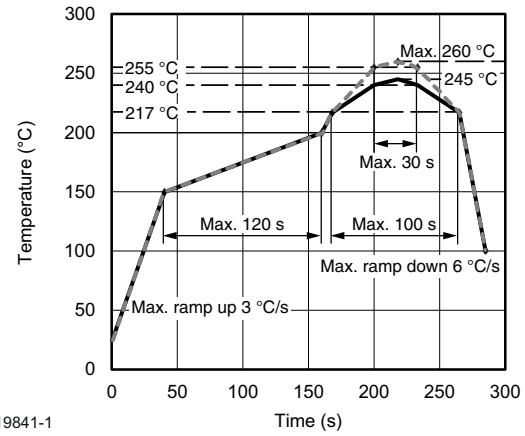


Fig. 21 - Lead (Pb)-free Reflow Solder Profile According to J-STD-020 for SMD Devices

## HANDLING AND STORAGE CONDITIONS

ESD level: HBM class 2

Floor life: unlimited

Conditions: $T_{amb}$ < 30 °C, RH < 85 %

Moisture sensitivity level 1, according to J-STD-020


For technical questions, contact: optocoupleranswers@vishay.com
THIS DOCUMENT IS SUBJECT TO CHANGE WITHOUT NOTICE. THE PRODUCTS DESCRIBED HEREIN AND THIS DOCUMENT ARE SUBJECT TO SPECIFIC DISCLAIMERS, SET FORTH AT www.vishay.com/doc?91000

# Disclaimer

ALL PRODUCT, PRODUCT SPECIFICATIONS AND DATA ARE SUBJECT TO CHANGE WITHOUT NOTICE TO IMPROVE RELIABILITY, FUNCTION OR DESIGN OR OTHERWISE.

Vishay Intertechnology, Inc., its affiliates, agents, and employees, and all persons acting on its or their behalf (collectively, “Vishay”), disclaim any and all liability for any errors, inaccuracies or incompleteness contained in any datasheet or in any other disclosure relating to any product.

Vishay makes no warranty, representation or guarantee regarding the suitability of the products for any particular purpose or the continuing production of any product. To the maximum extent permitted by applicable law, Vishay disclaims (i) any and all liability arising out of the application or use of any product, (ii) any and all liability, including without limitation special, consequential or incidental damages, and (iii) any and all implied warranties, including warranties of fitness for particular purpose, non-infringement and merchantability.

Statements regarding the suitability of products for certain types of applications are based on Vishay's knowledge of typical requirements that are often placed on Vishay products in generic applications. Such statements are not binding statements about the suitability of products for a particular application. It is the customer's responsibility to validate that a particular product with the properties described in the product specification is suitable for use in a particular application. Parameters provided in datasheets and / or specifications may vary in different applications and performance may vary over time. All operating parameters, including typical parameters, must be validated for each customer application by the customer's technical experts. Product specifications do not expand or otherwise modify Vishay's terms and conditions of purchase, including but not limited to the warranty expressed therein.

Hyperlinks included in this datasheet may direct users to third-party websites. These links are provided as a convenience and for informational purposes only. Inclusion of these hyperlinks does not constitute an endorsement or an approval by Vishay of any of the products, services or opinions of the corporation, organization or individual associated with the third-party website. Vishay disclaims any and all liability and bears no responsibility for the accuracy, legality or content of the third-party website or for that of subsequent links.

Vishay products are not designed for use in life-saving or life-sustaining applications or any application in which the failure of the Vishay product could result in personal injury or death unless specifically qualified in writing by Vishay. Customers using or selling Vishay products not expressly indicated for use in such applications do so at their own risk. Please contact authorized Vishay personnel to obtain written terms and conditions regarding products designed for such applications.

No license, express or implied, by estoppel or otherwise, to any intellectual property rights is granted by this document or by any conduct of Vishay. Product names and markings noted herein may be trademarks of their respective owners.

***© 2024 VISHAY INTERTECHNOLOGY, INC. ALL RIGHTS RESERVED***



THIS DOCUMENT IS SUBJECT TO CHANGE WITHOUT NOTICE. THE PRODUCTS DESCRIBED HEREIN AND THIS DOCUMENT ARE SUBJECT TO SPECIFIC DISCLAIMERS, SET FORTH AT www.vishay.com/doc?91000