High Speed Optocoupler, 1 MBd, Transistor Output



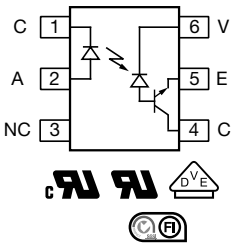

FEATURES

- High CMR of 10 kV/µs
- High speed optocoupler without base connection
- Integrated detector with photo diode and transistor
- TTL compatible
  Guaranteed DC performance overtemperature: 0 °C to 70 °C
- Open collector output
- Supply voltage up to 30 V
- Material categorization: for definitions of compliance please see www.vishay.com/doc?99912

Pb-free

e3

RoHS COMPLIANT

ADDITIONAL RESOURCES

3D Models | Design Tools | Related Documents

DESCRIPTION

The SFH636 is an optocoupler with a GaAlAs infrared emitting diode, optically coupled to an integrated photo detector consisting of a photo diode and a high speed transistor in a low pinout DIP-6 package. The device is functionally similar to 6N136 except there is no base connection and the foot print is different. Noise and common mode rejection performance is enhanced by not bringing out the base connection.

Signals can be transmitted between two electrically separated circuits up to frequencies of 2 MHz.

APPLICATIONS

- Data communications
- Programmable controllers
- IGBT logic and MOSFET driver stages
- IPM drivers

AGENCY APPROVALS

- UL1577
- cUL
- DIN EN 60747-5-5 (VDE 0884-5), available with option 1
- FIMKO

ORDERING INFORMATION

S	F	H	6	3	6	-	X	0	#	#	T
PART NUMBER							PACKAGE OPTION				TAPE AND REEL

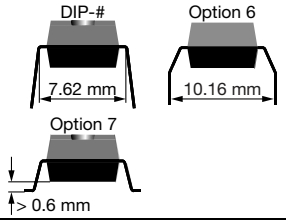

AGENCY CERTIFIED / PACKAGE	CTR (%)
UL, cUL, FIMKO	**≥ 19**
DIP-6	SFH636
SMD-6, option 7	SFH636-X007T
UL, cUL, FIMKO, VDE (Option 1)	**≥ 19**
DIP-6	SFH636-X001
DIP-6, option 6	SFH636-X016
SMD-6, option 7	SFH636-X017T

Note

- Additional options may be possible, please contact sales office

For technical questions, contact: optocoupleranswers@vishay.com

THIS DOCUMENT IS SUBJECT TO CHANGE WITHOUT NOTICE. THE PRODUCTS DESCRIBED HEREIN AND THIS DOCUMENT ARE SUBJECT TO SPECIFIC DISCLAIMERS, SET FORTH AT www.vishay.com/doc?91000

ABSOLUTE MAXIMUM RATINGS (T_{amb} = 25 °C, unless otherwise specified)				
PARAMETER	**CONDITIONS**	**SYMBOL**	**VALUE**	**UNIT**
INPUT				
Reverse voltage		V_R	3.0	V
DC forward current		I_F	25	mA
Surge forward current	$t_P \leq 1.0$ µs, 300 pulses/s	I_{FSM}	1.0	A
Power dissipation		P_{diss}	45	mW
OUTPUT				
Supply voltage		V_S	-0.5 to +30	V
Output voltage		V_O	-0.5 to +20	V
Output current		I_O	8	mA
Power dissipation		P_{diss}	100	mW
COUPLER				
Storage temperature range		T_{stg}	-55 to +150	°C
Ambient temperature range		T_{amb}	-55 to +100	°C
Junction temperature		T_j	100	°C
Soldering temperature	Max. 10 s, dip soldering: distance to seating plane ≥ 1.5 mm	T_{sld}	260	°C
Power dissipation		P_{diss}	145	mW

Note

- Stresses in excess of the absolute maximum ratings can cause permanent damage to the device. Functional operation of the device is not implied at these or any other conditions in excess of those given in the operational sections of this document. Exposure to absolute maximum ratings for extended periods of the time can adversely affect reliability.

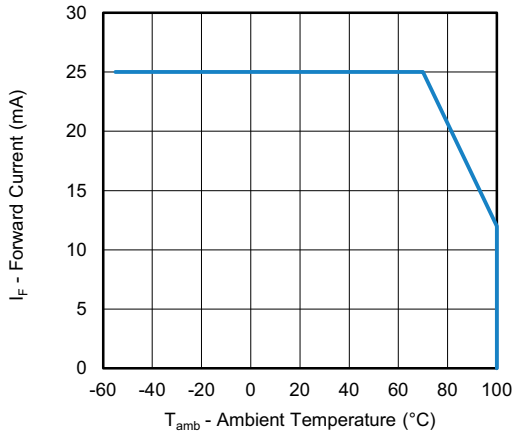

Fig. 1 - Forward Current vs. Ambient Temperature

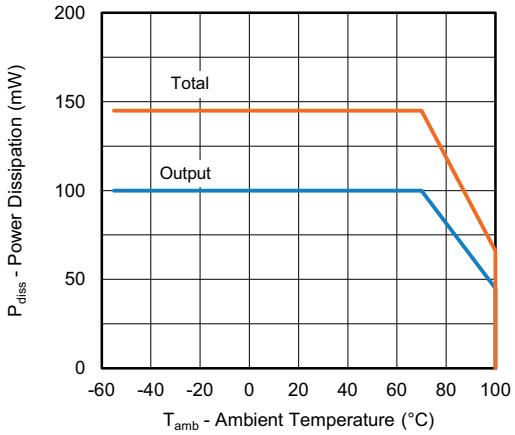

Fig. 2 - Power Dissipation vs. Ambient Temperature

For technical questions, contact: optocoupleranswers@vishay.com

THIS DOCUMENT IS SUBJECT TO CHANGE WITHOUT NOTICE. THE PRODUCTS DESCRIBED HEREIN AND THIS DOCUMENT ARE SUBJECT TO SPECIFIC DISCLAIMERS, SET FORTH AT www.vishay.com/doc?91000

ELECTRICAL CHARACTERISTICS (T_{amb} = 0 °C to 70 °C; typical values are at T_{amb} = 25 °C)						
PARAMETER	**TEST CONDITION**	**SYMBOL**	**MIN.**	**TYP.**	**MAX.**	**UNIT**
INPUT						
Forward voltage	I_F = 16 mA	V_F	-	1.3	1.8	V
Reverse current	V_R = 3 V	I_R	-	0.5	10	µA
Input capacitance	V_R = 0 V, f = 1 MHz	C_{IN}	-	20	-	pF
OUTPUT						
Low level supply current	I_F = 16 mA, V_O = open, V_{CC} = 15 V	I_{CCL}	-	150	-	µA
High level supply current	I_F = 0 V, V_O = open, V_{CC} = 15 V (1)	I_{CCH}	-	0.01	1	µA
	I_F = 0 V, V_O = open, V_{CC} = 15 V	I_{CCH}	-	0.01	2	µA
High level output current	I_F = 0 V, V_O = open, V_{CC} = 5.5 V (1)	I_{OH}	-	0.001	0.5	µA
	I_F = 0 V, V_O = open, V_{CC} = 15 V (1)	I_{OH}	-	0.001	1	µA
	I_F = 0 V, V_O = open, V_{CC} =15 V	I_{OH}	-		50	µA
Collector emitter capacitance	V_{CE} = 5 V, f = 1 MHz	C_{CE}	-	3	-	pF
COUPLER						
Coupling capacitance		C_{IO}	-	0.6	-	pF
Collector emitter saturation voltage	I_F = 16 mA, I_O = 2.4 mA, V_{CC} = 4.5 V (1)	V_{OL}	-	0.1	0.4	V

Notes

- Minimum and maximum values are testing requirements. Typical values are characteristics of the device and are the result of engineering evaluation. Typical values are for information only and are not part of the testing requirements.

(1) T_{amb} = 25 °C

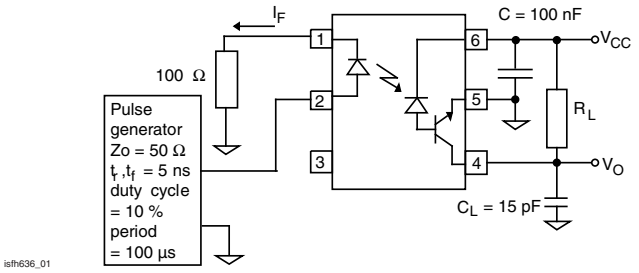

Fig. 3 - Test Setup

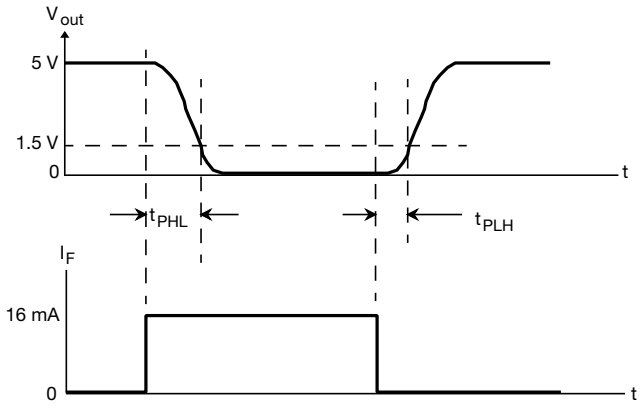

Fig. 4 - Switching Time Measurement

CURRENT TRANSFER RATIO (T_{amb} = 0 °C to 70 °C; typical values are at T_{amb} = 25 °C)						
PARAMETER	**TEST CONDITION**	**SYMBOL**	**MIN.**	**TYP.**	**MAX.**	**UNIT**
I_C/I_F	I_F = 16 mA, V_O = 0.4 V, V_{CC} = 4.5 V (1)	CTR	19	30	-	%
	I_F = 16 mA, V_O = 0.5 V, V_{CC} = 4.5 V	CTR	15	-	-	%

Note

(1) T_{amb} = 25 °C

SWITCHING CHARACTERISTICS (T_{amb} = 25 °C)						
PARAMETER	**TEST CONDITION**	**SYMBOL**	**MIN.**	**TYP.**	**MAX.**	**UNIT**
Propagation delay time (high to low)	I_F = 16 mA, V_{CC} = 5.0 V, R_L = 1.9 kΩ	t_{PHL}	-	-	0.8	µs
Propagation delay time (low to low)	I_F = 16 mA, V_{CC} = 5.0 V, R_L = 1.9 kΩ	t_{PLH}	-	-	0.8	µs

For technical questions, contact: optocoupleranswers@vishay.com

THIS DOCUMENT IS SUBJECT TO CHANGE WITHOUT NOTICE. THE PRODUCTS DESCRIBED HEREIN AND THIS DOCUMENT ARE SUBJECT TO SPECIFIC DISCLAIMERS, SET FORTH AT www.vishay.com/doc?91000

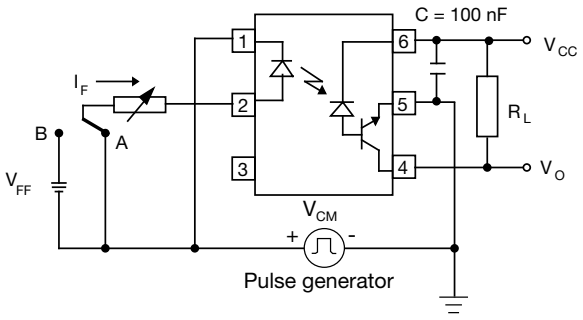

Fig. 5 - Common Mode Transient Test

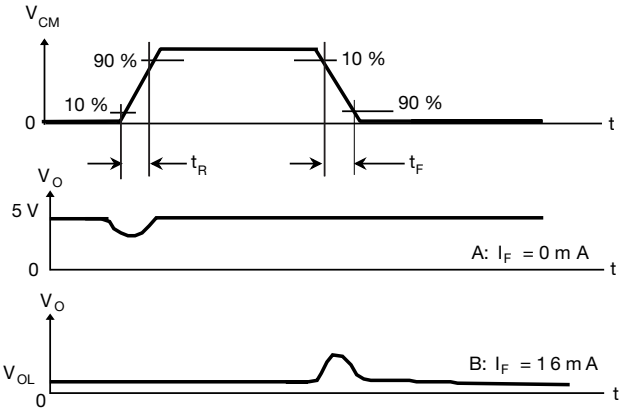

Fig. 6 - Measurement Waveform of CMR

COMMON MODE TRANSIENT IMMUNITY (T_{amb} = 25 °C)						
PARAMETER	**TEST CONDITION**	**SYMBOL**	**MIN.**	**TYP.**	**MAX.**	**UNIT**
Common mode transient immunity (high)	I_F = 0 mA, V_{CM} = 1500 V_{PP}, R_L = 1.9 kΩ, V_{CC} = 5.0 V	$\|CM_H\|$	-	10 000	-	V/µs
Common mode transient immunity (low)	I_F = 16 mA, V_{CM} = 1500 V_{PP}, R_L = 1.9 kΩ, V_{CC} = 5.0 V	$\|CM_L\|$	-	10 000	-	V/µs

SAFETY AND INSULATION RATINGS (T_{amb} = 25 °C, unless otherwise specified)				
PARAMETER	**TEST CONDITION**	**SYMBOL**	**VALUE**	**UNIT**
Climatic classification	According to IEC 68 part 1		55 / 100 / 21	
Pollution degree	According to DIN VDE 0109		2	
Comparative tracking index	Insulation group IIIa	CTI	175	
Maximum rated withstanding isolation voltage	According to UL1577, t = 1 min	V_{ISO}	4420	V_{RMS}
Tested withstanding isolation voltage	According to UL1577, t = 1 s	V_{ISO}	5300	V_{RMS}
Maximum transient isolation voltage	According to DIN EN 60747-5-5	V_{IOTM}	8000	V_{peak}
Maximum repetitive peak isolation voltage	According to DIN EN 60747-5-5	V_{IORM}	890	V_{peak}
Isolation resistance	T_{amb} = 25 °C, V_{IO} = 500 V	R_{IO}	$\geq 10^{12}$	Ω
	T_{amb} = 100 °C, V_{IO} = 500 V	R_{IO}	$\geq 10^{11}$	Ω
Output safety power		P_{SO}	700	mW
Input safety current		I_{SI}	400	mA
Input safety temperature		T_S	175	°C
Creepage distance	DIP-6		≥ 7	mm
Clearance distance	DIP-6		≥ 7	mm
Creepage distance	DIP-6, option 6		≥ 8	mm
Clearance distance	DIP-6, option 6		≥ 8	mm
Creepage distance	SMD-6, option 7		≥ 7	mm
Clearance distance	SMD-6, option 7		≥ 7	mm
Insulation thickness		DTI	≥ 0.4	mm

Note

- As per IEC 60747-5-5, § 7.4.3.8.2, this optocoupler is suitable for “safe electrical insulation” only within the safety ratings. Compliance with the safety ratings shall be ensured by means of protective circuits.

For technical questions, contact: optocoupleranswers@vishay.com

THIS DOCUMENT IS SUBJECT TO CHANGE WITHOUT NOTICE. THE PRODUCTS DESCRIBED HEREIN AND THIS DOCUMENT ARE SUBJECT TO SPECIFIC DISCLAIMERS, SET FORTH AT www.vishay.com/doc?91000

TYPICAL CHARACTERISTICS (T_{amb} = 25 °C, unless otherwise specified)

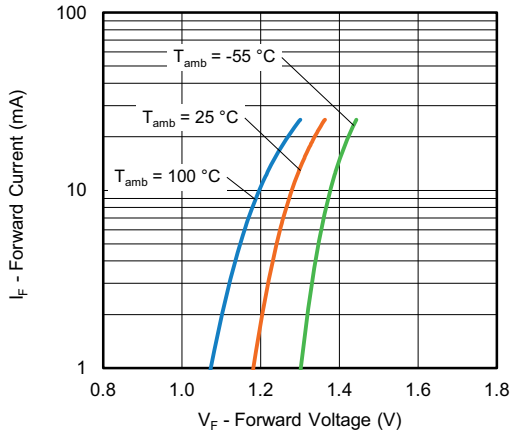

Fig. 7 - Forward Current vs. Forward Voltage

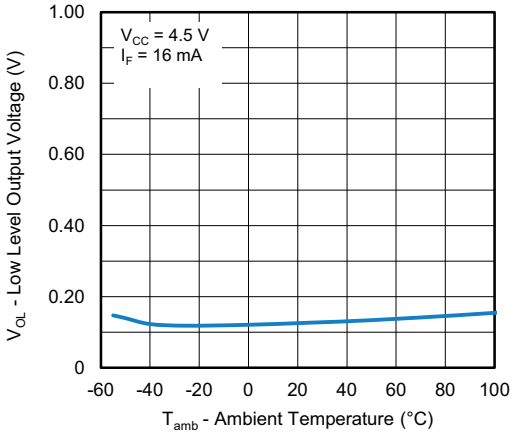

Fig. 10 - Low Level Output Voltage vs. Ambient Temperature

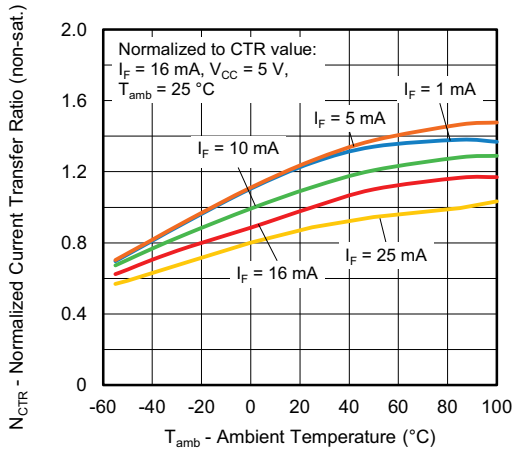

Fig. 8 - Normalized Current Transfer Ratio (non-sat.) vs. Ambient Temperature

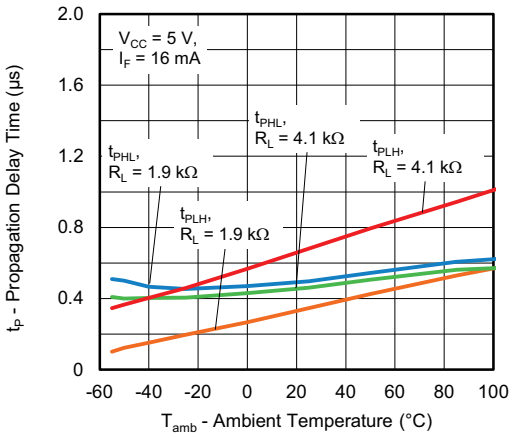

Fig. 11 - Propagation Delay Time vs. Ambient Temperature

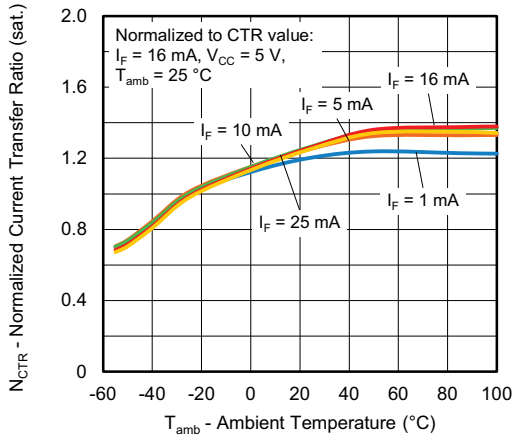

Fig. 9 - Normalized Current Transfer Ratio (sat.) vs. Ambient Temperature

For technical questions, contact: optocoupleranswers@vishay.com

THIS DOCUMENT IS SUBJECT TO CHANGE WITHOUT NOTICE. THE PRODUCTS DESCRIBED HEREIN AND THIS DOCUMENT ARE SUBJECT TO SPECIFIC DISCLAIMERS, SET FORTH AT www.vishay.com/doc?91000

PACKAGE DIMENSIONS

DIP-6

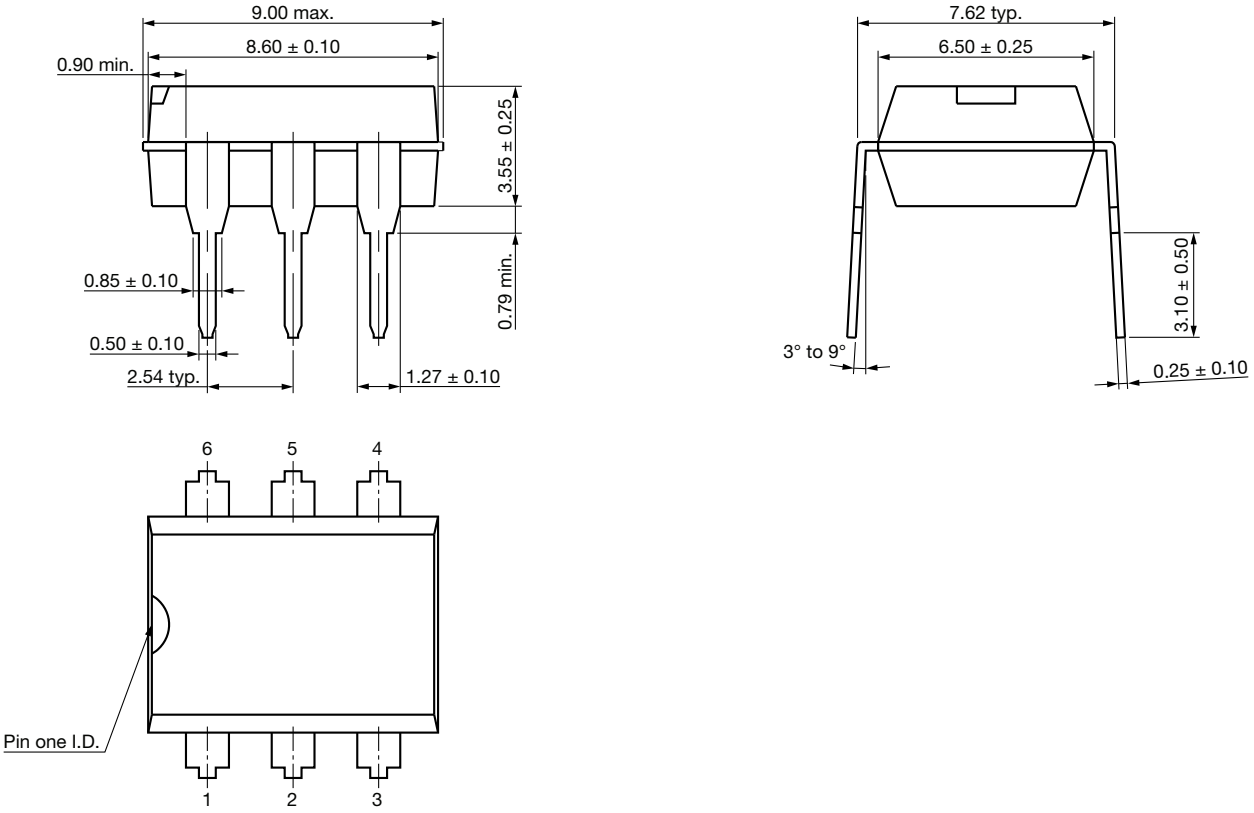

DIP-6, Option 6

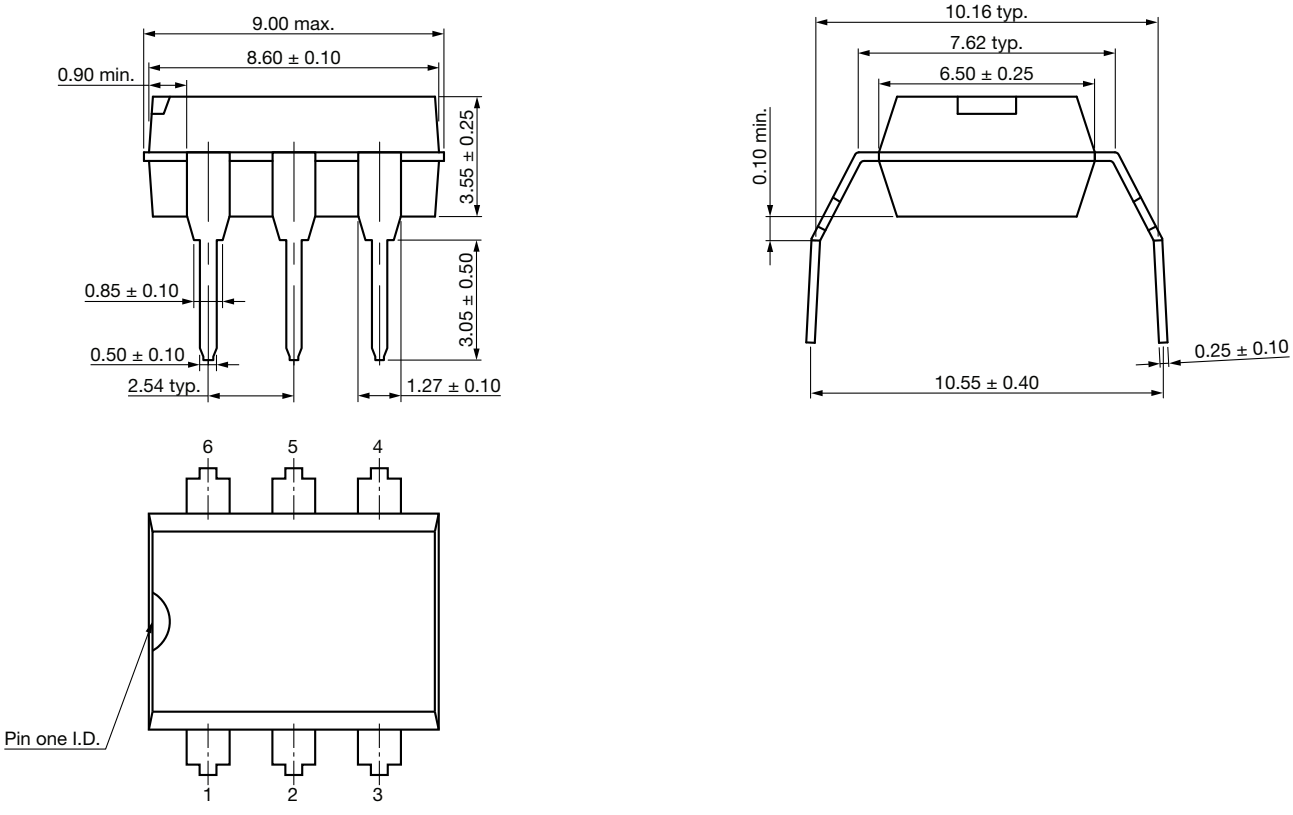

For technical questions, contact: optocoupleranswers@vishay.com

THIS DOCUMENT IS SUBJECT TO CHANGE WITHOUT NOTICE. THE PRODUCTS DESCRIBED HEREIN AND THIS DOCUMENT ARE SUBJECT TO SPECIFIC DISCLAIMERS, SET FORTH AT www.vishay.com/doc?91000

SMD-6, Option 7

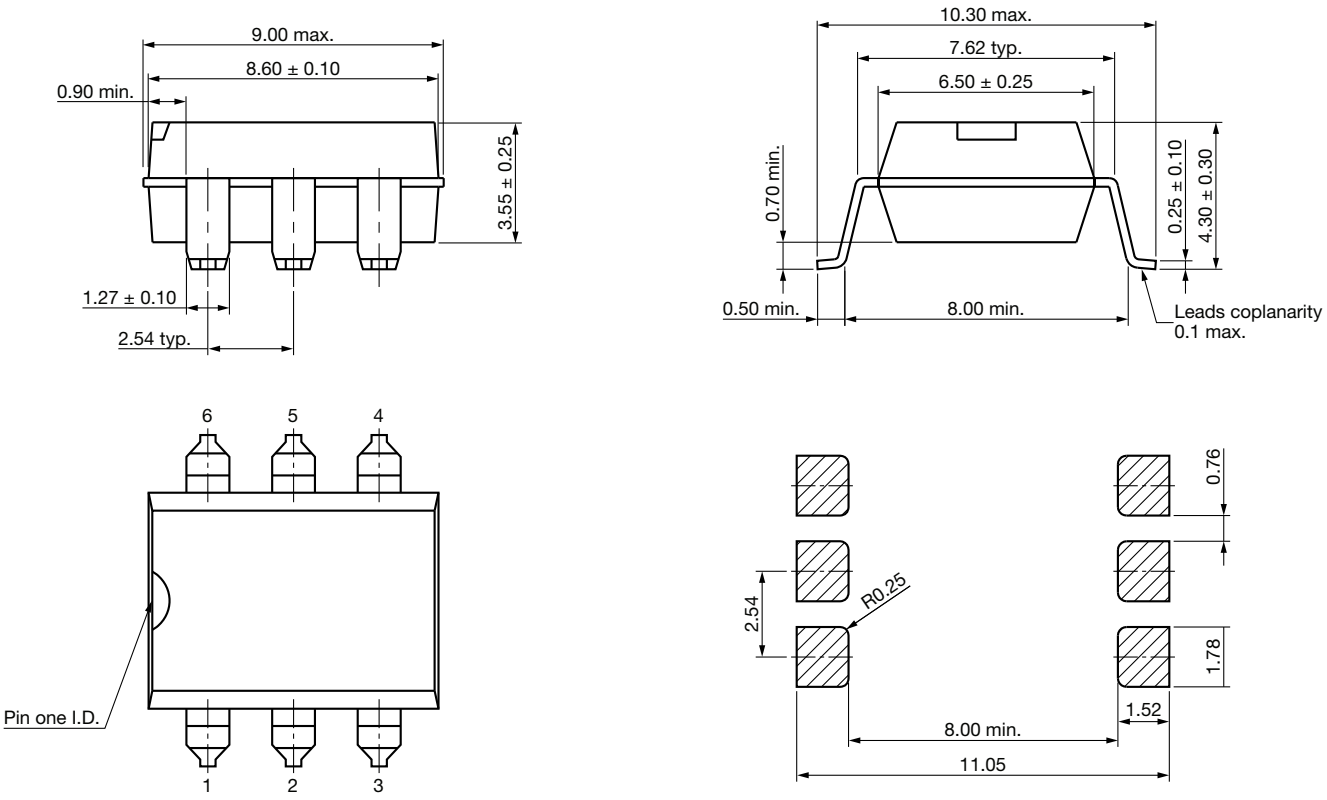

PACKAGE MARKING

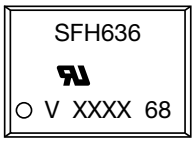

Fig. 12 - Example of SFH636

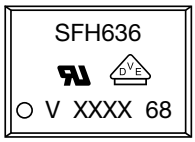

Fig. 13 - Example of SFH636-X017T

Notes

- XXXX = LMC (lot marking code)
- VDE logo is only marked on option 1 parts
- Tape and reel suffix (T) is not part of the package marking

For technical questions, contact: optocoupleranswers@vishay.com

THIS DOCUMENT IS SUBJECT TO CHANGE WITHOUT NOTICE. THE PRODUCTS DESCRIBED HEREIN AND THIS DOCUMENT ARE SUBJECT TO SPECIFIC DISCLAIMERS, SET FORTH AT www.vishay.com/doc?91000

PACKING INFORMATION (in millimeters)

Tube

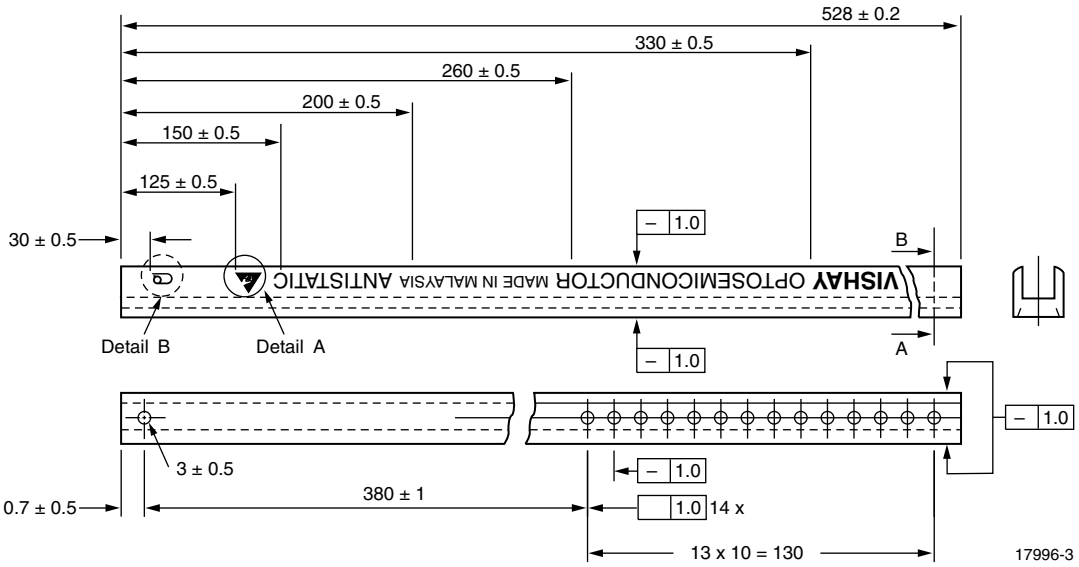

Fig. 14 - Shipping Tube Specifications for DIP-6 Packages

DEVICES PER TUBS			
TYPE	**UNITS/TUBE**	**TUBES/BOX**	**UNITS/BOX**
DIP-6	50	40	2000
DIP-6, option 6	50	40	2000

DIP-6

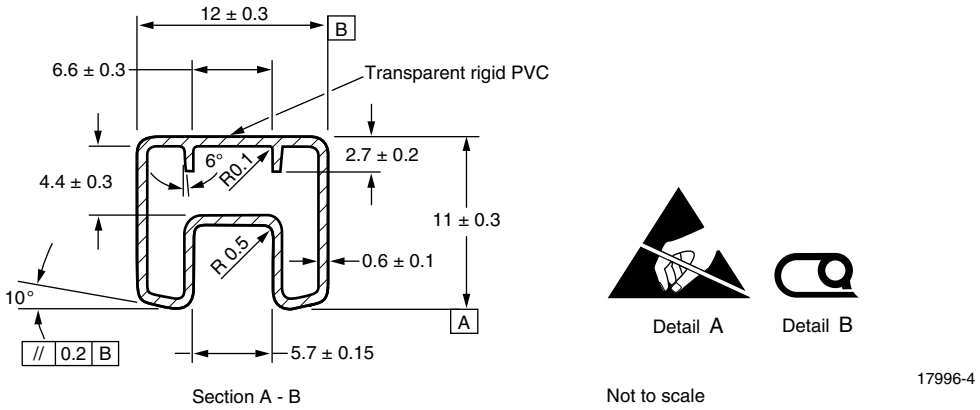

Fig. 15 - Tube Shipping Medium

For technical questions, contact: optocoupleranswers@vishay.com
THIS DOCUMENT IS SUBJECT TO CHANGE WITHOUT NOTICE. THE PRODUCTS DESCRIBED HEREIN AND THIS DOCUMENT ARE SUBJECT TO SPECIFIC DISCLAIMERS, SET FORTH AT www.vishay.com/doc?91000

DIP-6, Option 6

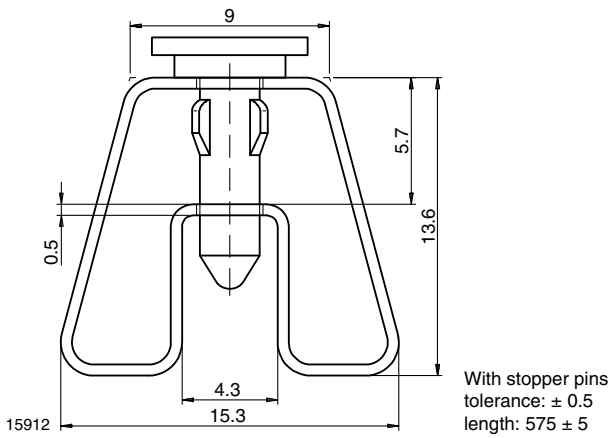

Fig. 16 - Tube Shipping Medium

Tape and Reel

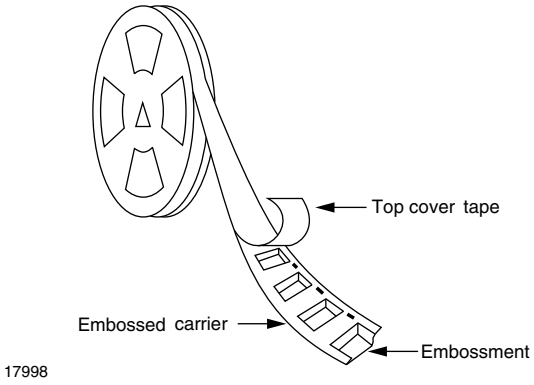

Fig. 17 - Tape and Reel Shipping Medium

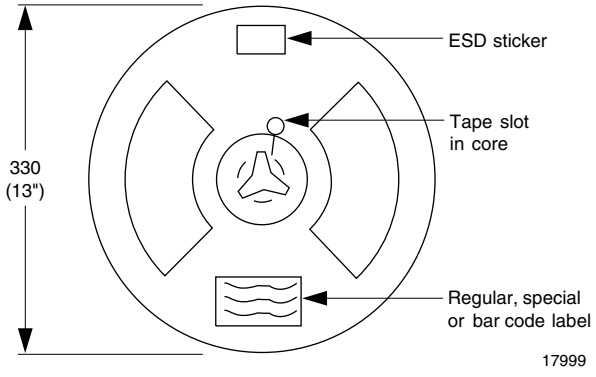

Fig. 18 - Tape and Reel Shipping Medium

SMD-6, Option 7

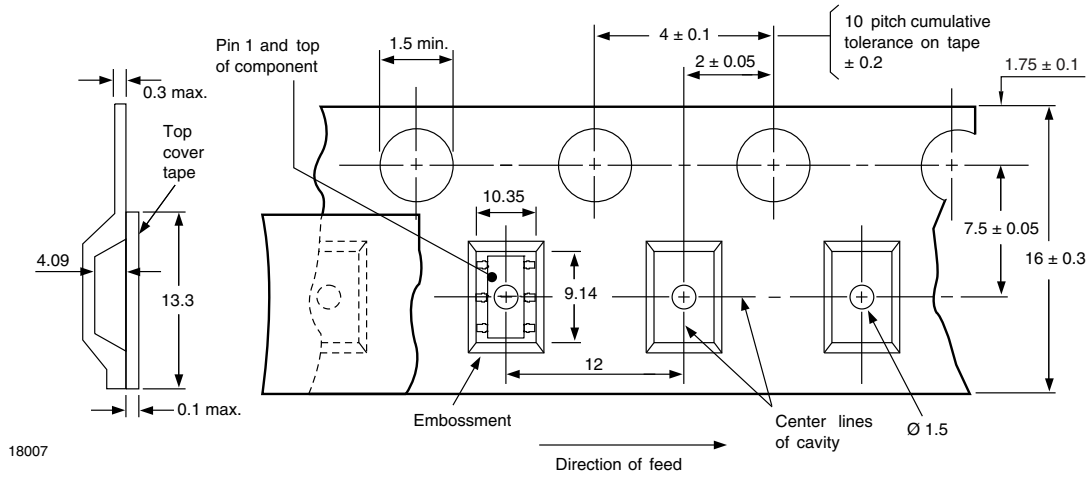

Fig. 19 - Tape and Reel Packing (1000 pieces on Reel)

For technical questions, contact: optocoupleranswers@vishay.com
THIS DOCUMENT IS SUBJECT TO CHANGE WITHOUT NOTICE. THE PRODUCTS DESCRIBED HEREIN AND THIS DOCUMENT ARE SUBJECT TO SPECIFIC DISCLAIMERS, SET FORTH AT www.vishay.com/doc?91000

SOLDER PROFILES

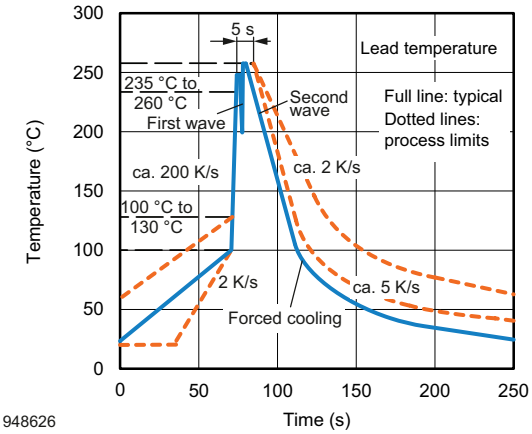

Fig. 20 - Wave Soldering Double Wave Profile According to J.STD-020 for DIP Devices

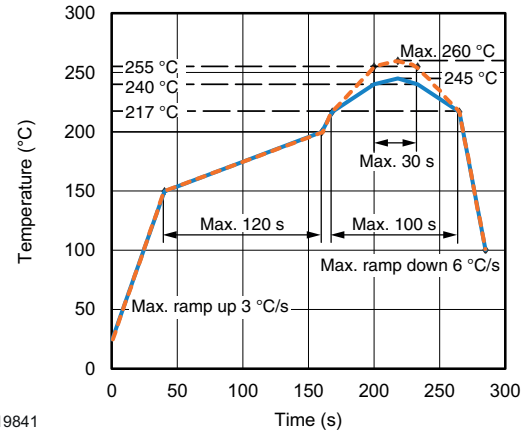

Fig. 21 - Lead (Pb)-free Reflow Solder Profile According to J-STD-020 for SMD Devices

HANDLING AND STORAGE CONDITIONS

ESD level: HBM class 2

Floor life: unlimited

Conditions: T_{amb} < 30 °C, RH < 85 %

Moisture sensitivity level 1, according to J-STD-020

For technical questions, contact: optocoupleranswers@vishay.com

THIS DOCUMENT IS SUBJECT TO CHANGE WITHOUT NOTICE. THE PRODUCTS DESCRIBED HEREIN AND THIS DOCUMENT ARE SUBJECT TO SPECIFIC DISCLAIMERS, SET FORTH AT www.vishay.com/doc?91000

Disclaimer

ALL PRODUCT, PRODUCT SPECIFICATIONS AND DATA ARE SUBJECT TO CHANGE WITHOUT NOTICE TO IMPROVE RELIABILITY, FUNCTION OR DESIGN OR OTHERWISE.

Vishay Intertechnology, Inc., its affiliates, agents, and employees, and all persons acting on its or their behalf (collectively, “Vishay”), disclaim any and all liability for any errors, inaccuracies or incompleteness contained in any datasheet or in any other disclosure relating to any product.

Vishay makes no warranty, representation or guarantee regarding the suitability of the products for any particular purpose or the continuing production of any product. To the maximum extent permitted by applicable law, Vishay disclaims (i) any and all liability arising out of the application or use of any product, (ii) any and all liability, including without limitation special, consequential or incidental damages, and (iii) any and all implied warranties, including warranties of fitness for particular purpose, non-infringement and merchantability.

Statements regarding the suitability of products for certain types of applications are based on Vishay's knowledge of typical requirements that are often placed on Vishay products in generic applications. Such statements are not binding statements about the suitability of products for a particular application. It is the customer's responsibility to validate that a particular product with the properties described in the product specification is suitable for use in a particular application. Parameters provided in datasheets and / or specifications may vary in different applications and performance may vary over time. All operating parameters, including typical parameters, must be validated for each customer application by the customer's technical experts. Product specifications do not expand or otherwise modify Vishay's terms and conditions of purchase, including but not limited to the warranty expressed therein.

Hyperlinks included in this datasheet may direct users to third-party websites. These links are provided as a convenience and for informational purposes only. Inclusion of these hyperlinks does not constitute an endorsement or an approval by Vishay of any of the products, services or opinions of the corporation, organization or individual associated with the third-party website. Vishay disclaims any and all liability and bears no responsibility for the accuracy, legality or content of the third-party website or for that of subsequent links.

Vishay products are not designed for use in life-saving or life-sustaining applications or any application in which the failure of the Vishay product could result in personal injury or death unless specifically qualified in writing by Vishay. Customers using or selling Vishay products not expressly indicated for use in such applications do so at their own risk. Please contact authorized Vishay personnel to obtain written terms and conditions regarding products designed for such applications.

No license, express or implied, by estoppel or otherwise, to any intellectual property rights is granted by this document or by any conduct of Vishay. Product names and markings noted herein may be trademarks of their respective owners.

© 2024 VISHAY INTERTECHNOLOGY, INC. ALL RIGHTS RESERVED

THIS DOCUMENT IS SUBJECT TO CHANGE WITHOUT NOTICE. THE PRODUCTS DESCRIBED HEREIN AND THIS DOCUMENT ARE SUBJECT TO SPECIFIC DISCLAIMERS, SET FORTH AT www.vishay.com/doc?91000