Optocoupler, Phototransistor Output

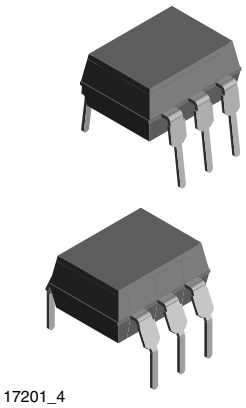

17201_4

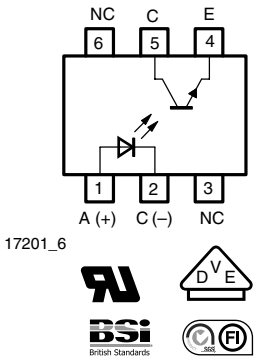

17201_6

FEATURES

- High common mode rejection
- Four CTR groups available
- Compliant to RoHS directive 2002/95/EC and in accordance to WEEE 2002/96/EC

Pb-free

e3

RoHS COMPLIANT

APPLICATIONS

- Switch-mode power supplies
- Line receiver
- Computer peripheral interface
- Microprocessor system interface
- Reinforced isolation provides circuit protection against electrical shock (safety class II)
- Circuits for safe protective separation against electrical shock according to safety class II (reinforced isolation):
  - for appl. class I - IV at mains voltage ≤ 300 V
  - for appl. class I - III at mains voltage ≤ 600 V
  according to DIN EN 60747-5-5

AGENCY APPROVALS

- UL1577, file no. E52744, double protection
- BSI IEC 60950 IEC 60065
- DIN EN 60747-5-5 (VDE 0884)
- FIMKO
- cUL tested to CSA 22.2 bulletin 5A

DESCRIPTION

The TCDT1120(G) series consists of a phototransistor optically coupled to a gallium arsenide infrared emitting diode in a 6 lead plastic dual in line package.

ORDER INFORMATION (1)	
PART	**REMARKS**
TCDT1120	CTR > 40 %, DIP-6
TCDT1122	CTR 63 % to 125 %, DIP-6
TCDT1123	CTR 100 % to 200 %, DIP-6
TCDT1124	CTR 160 % to 320 %, DIP-6
TCDT1120G	CTR > 40 %, DIP-6
TCDT1122G	CTR 63 % to 125 %, DIP-6
TCDT1123G	CTR 100 % to 200 %, DIP-6
TCDT1124G	CTR 160 % to 320 %, DIP-6

Note

(1) G = leadform 10.16 mm; G is not marked on the body.

ABSOLUTE MAXIMUM RATINGS (1)				
PARAMETER	**TEST CONDITION**	**SYMBOL**	**VALUE**	**UNIT**
INPUT				
Reverse voltage		V_R	5	V
Forward current		I_F	60	mA
Forward surge current	$t_p \leq 10$ µs	I_{FSM}	3	A
Power dissipation		P_{diss}	100	mW
Junction temperature		T_j	125	°C
OUTPUT				
Collector emitter voltage		V_{CEO}	70	V
Emitter collector voltage		V_{ECO}	7	V
Collector current		I_C	50	mA
Collector peak current	$t_p/T = 0.5$, $t_p \leq 10$ ms	I_{CM}	100	mA
Power dissipation		P_{diss}	150	mW
Junction temperature		T_j	125	°C
COUPLER				
Isolation test voltage (RMS)	t = 1 s	V_{ISO}	5000	V_{RMS}
Total power dissipation		P_{tot}	250	mW
Ambient temperature range		T_{amb}	- 55 to + 100	°C
Storage temperature range		T_{stg}	- 55 to + 125	°C
Soldering temperature (2)	2 mm from case, t ≤ 10 s	T_{sld}	260	°C

Notes

(1) T_{amb} = 25 °C, unless otherwise specified.
Stresses in excess of the absolute maximum ratings can cause permanent damage to the device. Functional operation of the device is not implied at these or any other conditions in excess of those given in the operational sections of this document. Exposure to absolute maximum ratings for extended periods of the time can adversely affect reliability.

(2) Refer to wave profile for soldering conditions for through hole devices (DIP).

ELECTRICAL CHARACTERISTCS (1)						
PARAMETER	**TEST CONDITION**	**SYMBOL**	**MIN.**	**TYP.**	**MAX.**	**UNIT**
INPUT						
Forward voltage	I_F = 50 mA	V_F		1.25	1.6	V
Junction capacitance	V_R = 0 V, f = 1 MHz	C_j		50		pF
OUTPUT						
Collector base voltage	I_C = 100 µA	V_{CBO}	90			V
Collector emitter voltage	I_C = 1 mA	V_{CEO}	90			V
Emitter collector voltage	I_E = 100 µA	V_{ECO}	7			V
Collector ermitter cut-off current	V_{CE} = 20 V, I_F = 0 A	I_{CEO}			150	nA
COUPLER						
Collector emitter saturation voltage	I_F = 10 mA, I_C = 1 mA	V_{CEsat}			0.3	V
Cut-off frequency	V_{CE} = 5 V, I_F = 10 mA, R_L = 100 Ω	f_c		110		kHz
Coupling capacitance	f = 1 MHz	C_k		0.3		pF

Note

(1) T_{amb} = 25 °C, unless otherwise specified.
Minimum and maximum values are tested requierements. Typical values are characteristics of the device and are the result of engineering evaluations. Typical values are for information only and are not part of the testing requirements.

CURRENT TRANSFER RATIO							
PARAMETER	**TEST CONDITION**	**PART**	**SYMBOL**	**MIN.**	**TYP.**	**MAX.**	**UNIT**
I_C/I_F	V_{CE} = 5 V, I_F = 1 mA	TCDT1120	CTR	10			%
		TCDT1120G					
		TCDT1122	CTR	15			%
		TCDT1122G					
		TCDT1123	CTR	30			%
		TCDT1123G					
		TCDT1124	CTR	60			%
		TCDT1124G					
	V_{CE} = 5 V, I_F = 10 mA	TCDT1120	CTR	40			%
		TCDT1120G					
		TCDT1122	CTR	63		125	%
		TCDT1122G					
		TCDT1123	CTR	100		200	%
		TCDT1123G					
		TCDT1124	CTR	160		320	%
		TCDT1124G					

MAXIMUM SAFETY RATINGS (1)						
PARAMETER	**TEST CONDITION**	**SYMBOL**	**MIN.**	**TYP.**	**MAX.**	**UNIT**
INPUT						
Forward current		I_F			130	mA
OUTPUT						
Power dissipation		P_{diss}			265	mW
COUPLER						
Rated impulse voltage		V_{IOTM}			6	kV
Safety temperature		T_{si}			150	°C

Note

(1) According to DIN EN 60747-5-5 (see figure 2). This optocoupler is suitable for safe electrical isolation only within the safety ratings. Compliance with the safety ratings shall be ensured by means of suitable protective circuits.

INSULATION RATED PARAMETERS						
PARAMETER	**TEST CONDITION**	**SYMBOL**	**MIN.**	**TYP.**	**MAX.**	**UNIT**
Partial discharge test voltage - routine test	100 %, t_{test} = 1 s	V_{pd}	1.6			kV
Partial discharge test voltage - lot test (sample test)	t_{Tr} = 60 s, t_{test} = 10 s, (see figure 2)	V_{IOTM}	6			kV
		V_{pd}	1.3			kV
Insulation resistance	V_{IO} = 500 V	R_{IO}	10^{12}			Ω
	V_{IO} = 500 V, $T_{amb} \leq$ 100 °C	R_{IO}	10^{11}			Ω
	V_{IO} = 500 V, $T_{amb} \leq$ 150 °C (construction test only)	R_{IO}	10^{9}			Ω

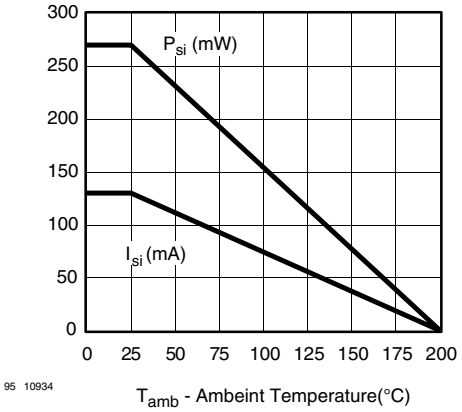

Fig. 1 - Derating Diagram

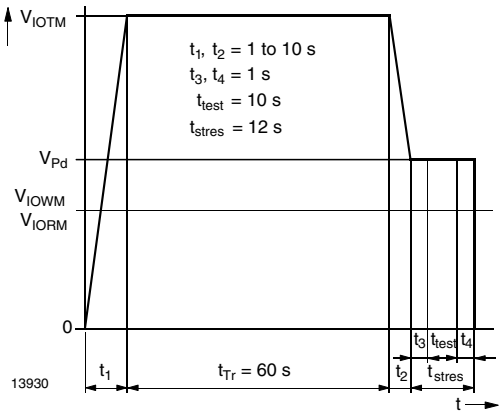

Fig. 2 - Test Pulse Diagram for Sample Test According to DIN EN 60747-5-5/DIN EN 60747-; IEC 60747

SWITCHING CHARACTERISTICS

PARAMETER	TEST CONDITION	PART	SYMBOL	MIN.	TYP.	MAX.	UNIT
Current time	V_S = 5 V, R_L = 100 Ω, (see figure 3)	TCDT1120	I_F		10		mA
		TCDT1120G					
		TCDT1123	I_F		10		mA
		TCDT1123G					
		TCDT1124	I_F		10		mA
		TCDT1124G					
Delay time	V_S = 5 V, R_L = 100 Ω, (see figure 3)	TCDT1120	t_D		2.5		µs
		TCDT1120G					
		TCDT1123	t_D		2.8		µs
		TCDT1123G					
		TCDT1124	t_D		2		µs
		TCDT1124G					
Rise time	V_S = 5 V, R_L = 100 Ω, (see figure 3)	TCDT1120	t_r		3		µs
		TCDT1120G					
		TCDT1123	t_r		4.2		µs
		TCDT1123G					
		TCDT1124	t_r		4		µs
		TCDT1124G					
Storage time	V_S = 5 V, R_L = 100 Ω, (see figure 3)	TCDT1120	t_s		0.3		µs
		TCDT1120G					
		TCDT1123	t_s		0.3		µs
		TCDT1123G					
		TCDT1124	t_s		0.3		µs
		TCDT1124G					
Fall time	V_S = 5 V, R_L = 100 Ω, (see figure 3)	TCDT1120	t_f		3.7		µs
		TCDT1120G					
		TCDT1123	t_f		4.7		µs
		TCDT1123G					
		TCDT1124	t_f		4.7		µs
		TCDT1124G					

SWITCHING CHARACTERISTICS							
PARAMETER	TEST CONDITION	PART	SYMBOL	MIN.	TYP.	MAX.	UNIT
Turn-on time	V_S = 5 V, R_L = 100 Ω, (see figure 3)	TCDT1120	t_{on}		5.5		µs
		TCDT1120G					
		TCDT1123	t_{on}		7		µs
		TCDT1123G					
		TCDT1124	t_{on}		6		µs
		TCDT1124G					
Turn-off time	V_S = 5 V, R_L = 100 Ω, (see figure 3)	TCDT1120	t_{off}		4		µs
		TCDT1120G					
		TCDT1123	t_{off}		5		µs
		TCDT1123G					
		TCDT1124	t_{off}		5		µs
		TCDT1124G					
Turn-on time	V_S = 5 V, R_L = 1 kΩ, (see figure 4)	TCDT1120	t_{on}		16.5		µs
		TCDT1120G					
		TCDT1123	t_{on}		21.5		µs
		TCDT1123G					
		TCDT1124	t_{on}		20		µs
		TCDT1124G					
Turn-off time	V_S = 5 V, R_L = 1 kΩ, (see figure 4)	TCDT1120	t_{off}		22.5		µs
		TCDT1120G					
		TCDT1123	t_{off}		37.5		µs
		TCDT1123G					
		TCDT1124	t_{off}		50		µs
		TCDT1124G					

TYPICAL CHARACTERISTICS

T_{amb} = 25 °C, unless otherwise specified

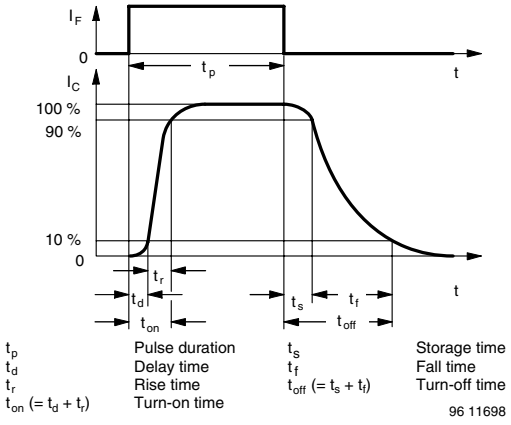

Fig. 3 - Switching Times

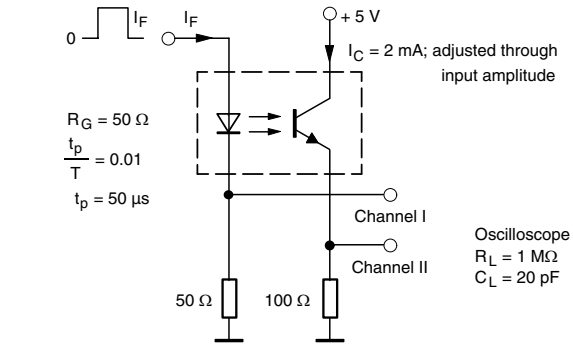

Fig. 4 - Test Circuit, Non-Saturated Operation

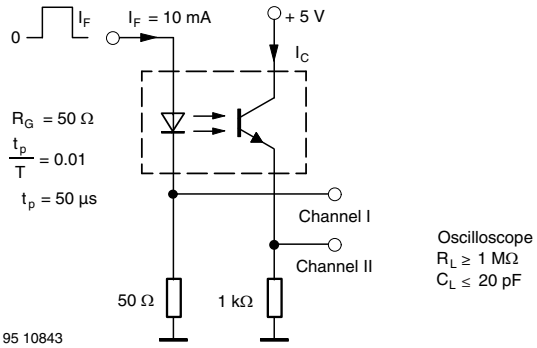

Fig. 5 - Test Circuit, Saturated Operation

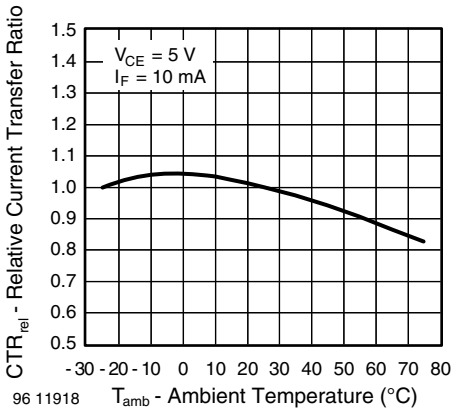

Fig. 8 - Relative Current Transfer Ratio vs. Ambient Temperature

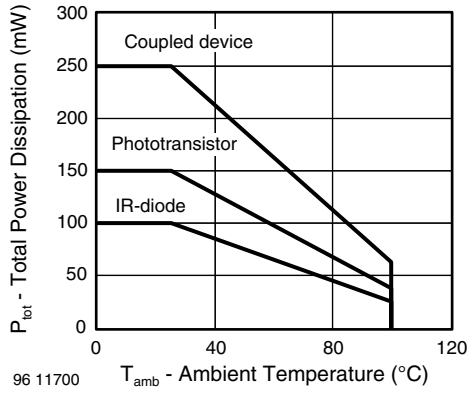

Fig. 6 - Total Power Dissipation vs. Ambient Temperature

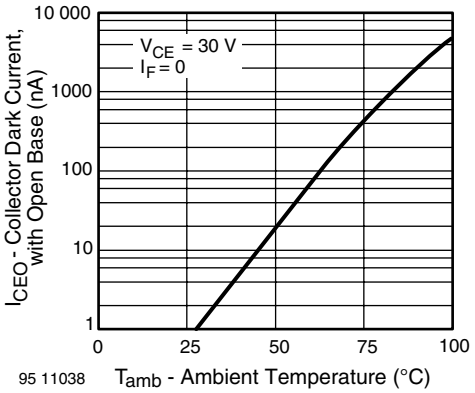

Fig. 9 - Collector Dark Current vs. Ambient Temperature

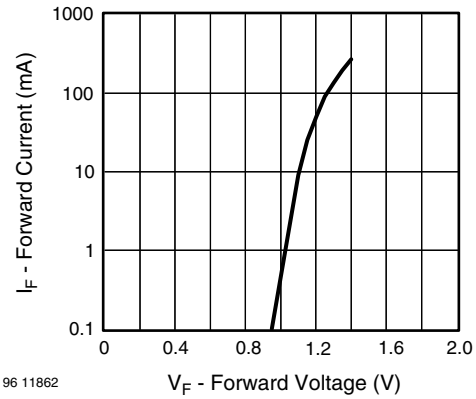

Fig. 7 - Forward Current vs. Forward Voltage

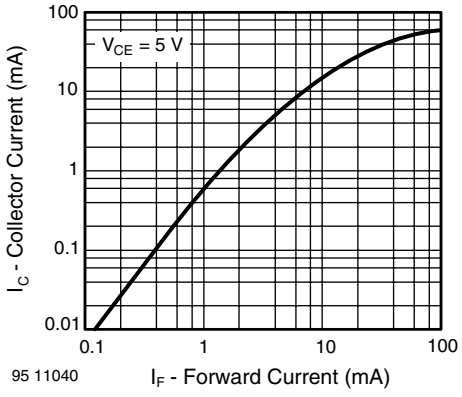

Fig. 10 - Collector Current vs. Forward Current

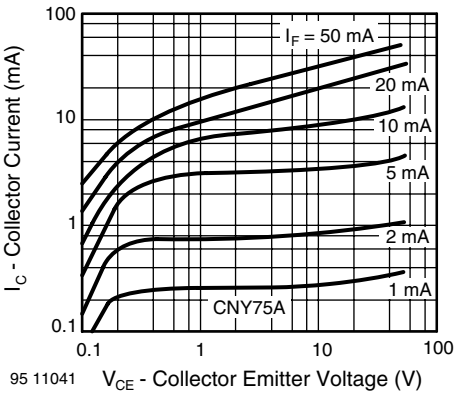

Fig. 11 - Collector Current vs. Collector Emitter Voltage

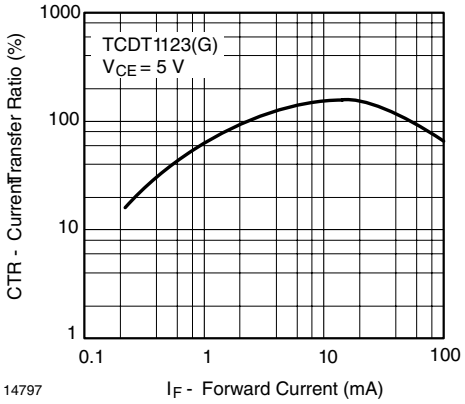

Fig. 14 - Current Transfer Ratio vs. Forward Current

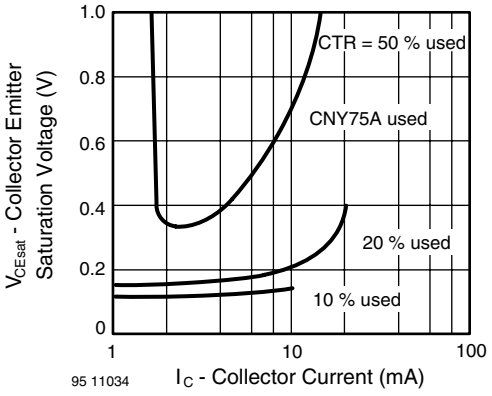

Fig. 12 - Collector Emitter Saturation Voltage vs. Collector Current

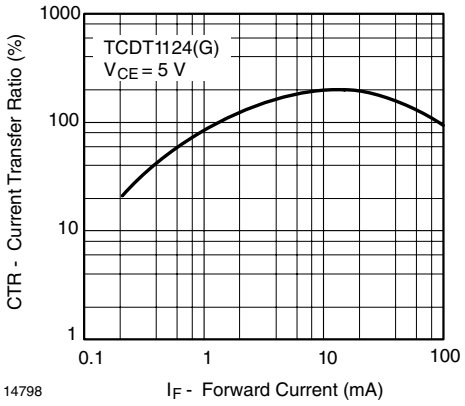

Fig. 15 - Current Transfer Ratio vs. Forward Current

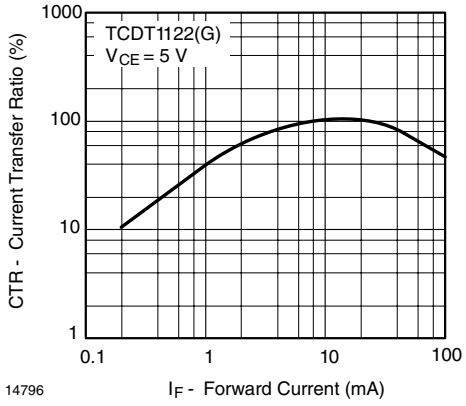

Fig. 13 - Current Transfer Ratio vs. Forward Current

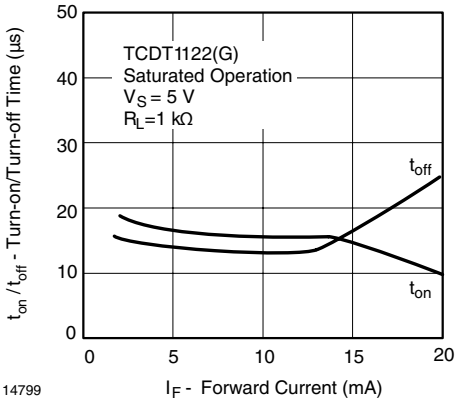

Fig. 16 - Turn-on/off Time vs. Forward Current

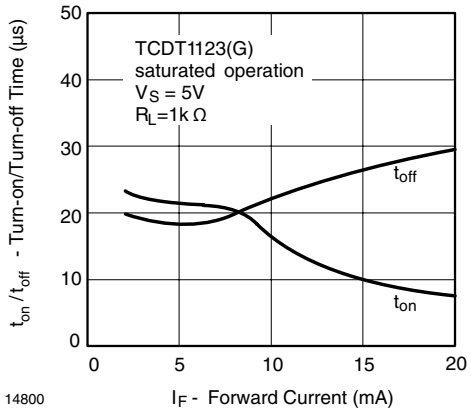

Fig. 17 - Turn-on/off Time vs. Forward Current

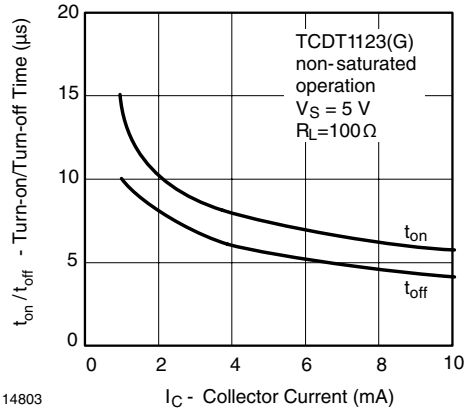

Fig. 20 - Turn-on/off Time vs. Collector Current

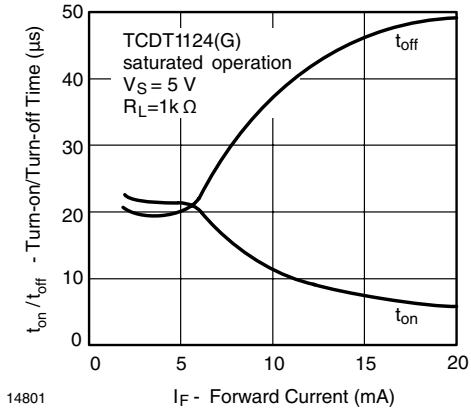

Fig. 18 - Turn-on/off Time vs. Forward Current

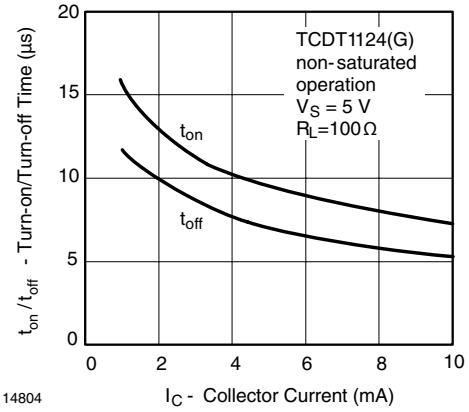

Fig. 21 - Turn-on/off Time vs. Collector Current

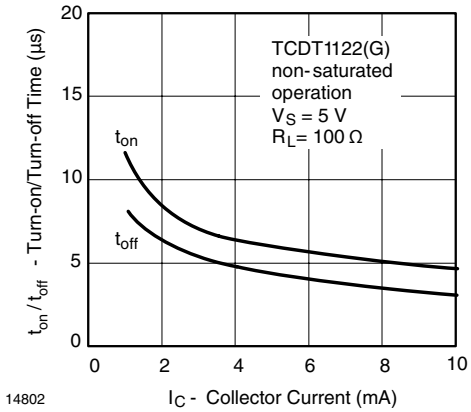

Fig. 19 - Turn-on/off Time vs. Collector Current

PACKAGE DIMENSIONS in millimeters

DIP-6

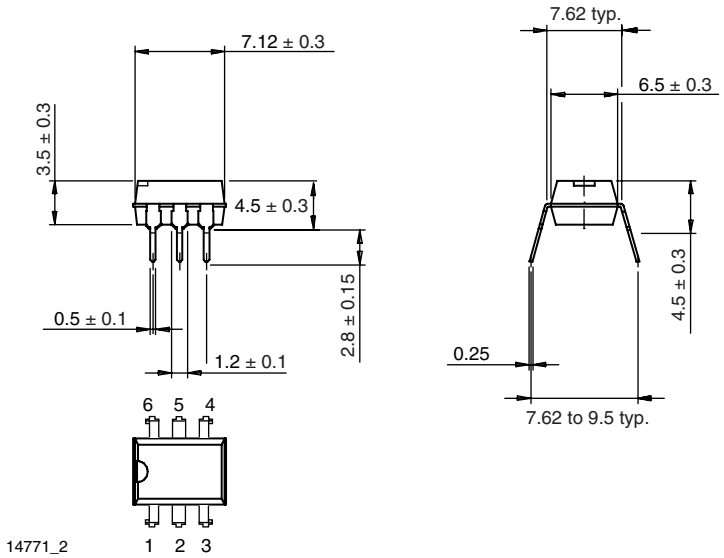

DIP-6, 400 mil

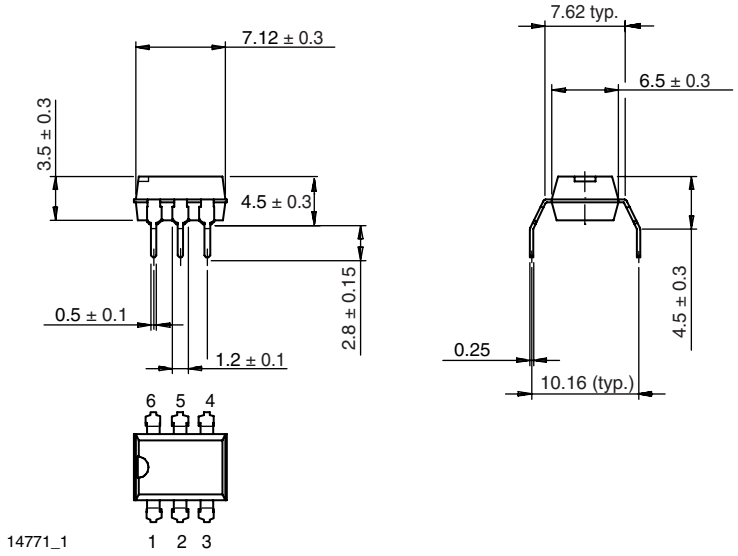

PACKAGE MARKING

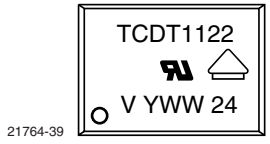

Note

Example of making used for the TCDT1122 and TCDT1122G

Disclaimer

ALL PRODUCT, PRODUCT SPECIFICATIONS AND DATA ARE SUBJECT TO CHANGE WITHOUT NOTICE TO IMPROVE RELIABILITY, FUNCTION OR DESIGN OR OTHERWISE.

Vishay Intertechnology, Inc., its affiliates, agents, and employees, and all persons acting on its or their behalf (collectively, “Vishay”), disclaim any and all liability for any errors, inaccuracies or incompleteness contained in any datasheet or in any other disclosure relating to any product.

Vishay makes no warranty, representation or guarantee regarding the suitability of the products for any particular purpose or the continuing production of any product. To the maximum extent permitted by applicable law, Vishay disclaims (i) any and all liability arising out of the application or use of any product, (ii) any and all liability, including without limitation special, consequential or incidental damages, and (iii) any and all implied warranties, including warranties of fitness for particular purpose, non-infringement and merchantability.

Statements regarding the suitability of products for certain types of applications are based on Vishay's knowledge of typical requirements that are often placed on Vishay products in generic applications. Such statements are not binding statements about the suitability of products for a particular application. It is the customer's responsibility to validate that a particular product with the properties described in the product specification is suitable for use in a particular application. Parameters provided in datasheets and / or specifications may vary in different applications and performance may vary over time. All operating parameters, including typical parameters, must be validated for each customer application by the customer's technical experts. Product specifications do not expand or otherwise modify Vishay's terms and conditions of purchase, including but not limited to the warranty expressed therein.

Hyperlinks included in this datasheet may direct users to third-party websites. These links are provided as a convenience and for informational purposes only. Inclusion of these hyperlinks does not constitute an endorsement or an approval by Vishay of any of the products, services or opinions of the corporation, organization or individual associated with the third-party website. Vishay disclaims any and all liability and bears no responsibility for the accuracy, legality or content of the third-party website or for that of subsequent links.

Vishay products are not designed for use in life-saving or life-sustaining applications or any application in which the failure of the Vishay product could result in personal injury or death unless specifically qualified in writing by Vishay. Customers using or selling Vishay products not expressly indicated for use in such applications do so at their own risk. Please contact authorized Vishay personnel to obtain written terms and conditions regarding products designed for such applications.

No license, express or implied, by estoppel or otherwise, to any intellectual property rights is granted by this document or by any conduct of Vishay. Product names and markings noted herein may be trademarks of their respective owners.

© 2024 VISHAY INTERTECHNOLOGY, INC. ALL RIGHTS RESERVED

THIS DOCUMENT IS SUBJECT TO CHANGE WITHOUT NOTICE. THE PRODUCTS DESCRIBED HEREIN AND THIS DOCUMENT ARE SUBJECT TO SPECIFIC DISCLAIMERS, SET FORTH AT www.vishay.com/doc?91000