Optocoupler, Phototransistor Output, SOP-6L5, 110 °C Rated, Half Pitch, Long Mini-Flat Package

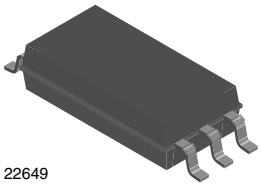

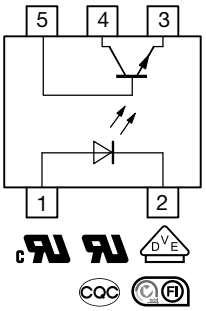

FEATURES

- SMD low profile 5 pin package
- Isolation test voltage 5000 V_{RMS}
- CTR flexibility available see order information
- Special construction
- Extra low coupling capacitance
- Connected base
- DC input with transistor output
- Temperature range -55 °C to 110 °C
- Creepage distance > 8 mm
- Material categorization: for definitions of compliance please see www.vishay.com/doc?99912

Pb-free

e3

RoHS COMPLIANT

HALOGEN FREE

GREEN (5-2008)

LINKS TO ADDITIONAL RESOURCES

Product Page | Design Tools | SPICE Models | Related Documents

DESCRIPTION

The TCLT111. series consists of a phototransistor optically coupled to a gallium arsenide infrared-emitting diode in a 5-lead SOP-6L package.

APPLICATIONS

- Switchmode power supplies
- Computer peripheral interface
- Microprocessor system interface

AGENCY APPROVALS

- UL
- cUL
- DIN EN 60747-5-5 (VDE 0884-5)
- FIMKO
- BSI
- CQC GB4943.1
- CQC GB8898

ORDERING INFORMATION

T	C	L	T	1	1	1	#

PART NUMBER

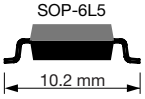

AGENCY CERTIFIED / PACKAGE	CTR (%)									
	5 mA	10 mA				5 mA				
UL, cUL, VDE, FIMKO, CQC	50 to 600	40 to 80	63 to 125	100 to 200	160 to 320	50 to 150	100 to 300	80 to 160	130 to 260	200 to 400
SOP-6L5	TCLT1110	TCLT1111	TCLT1112	TCLT1113	TCLT1114	TCLT1115	TCLT1116	TCLT1117	TCLT1118	TCLT1119

For technical questions, contact: optocoupleranswers@vishay.com

THIS DOCUMENT IS SUBJECT TO CHANGE WITHOUT NOTICE. THE PRODUCTS DESCRIBED HEREIN AND THIS DOCUMENT ARE SUBJECT TO SPECIFIC DISCLAIMERS, SET FORTH AT www.vishay.com/doc?91000

ABSOLUTE MAXIMUM RATINGS (T_{amb} = 25 °C, unless otherwise specified)				
PARAMETER	**TEST CONDITION**	**SYMBOL**	**VALUE**	**UNIT**
INPUT				
Reverse voltage		V_R	6	V
Forward current		I_F	60	mA
Forward surge current	$t_p \leq 10$ µs	I_{FSM}	1.5	A
Power dissipation		P_{diss}	100	mW
Junction temperature		T_j	125	°C
OUTPUT				
Collector emitter voltage		V_{CEO}	70	V
Emitter collector voltage		V_{ECO}	7	V
Collector current		I_C	50	mA
Collector peak current	$t_p/T = 0.5$, $t_p \leq 10$ ms	I_{CM}	100	mA
Power dissipation		P_{diss}	150	mW
Junction temperature		T_j	125	°C
COUPLER				
Total power dissipation		P_{tot}	250	mW
Operating ambient temperature range		T_{amb}	-55 to +110	°C
Storage temperature range		T_{stg}	-55 to +125	°C
Soldering temperature [1]		T_{sld}	260	°C

Notes

- Stresses in excess of the absolute Maximum Ratings can cause permanent damage to the device. Functional operation of the device is not implied at these or any other conditions in excess of those given in the operational sections of this document. Exposure to absolute Maximum Rating for extended periods of the time can adversely affect reliability.

(1) Wave soldering three cycles are allowed. Also refer to “Assembly Instruction” (www.vishay.com/doc?80054).

ELECTRICAL CHARACTERISTICS (T_{amb} = 25 °C, unless otherwise specified)						
PARAMETER	**TEST CONDITION**	**SYMBOL**	**MIN.**	**TYP.**	**MAX.**	**UNIT**
input						
Forward voltage	I_F = 50 mA	V_F	-	1.25	1.6	V
Junction capacitance	V_R = 0 V, f = 1 MHz	C_j	-	50	-	pF
output						
Collector emitter voltage	I_C = 1 mA	V_{CEO}	80	-	-	V
Emitter collector voltage	I_E = 100 µA	V_{ECO}	7	-	-	V
Collector emitter leakage current	V_{CE} = 20 V, I_F = 0 A	I_{CEO}	-	10	100	nA
coupler						
Collector emitter saturation voltage	I_F = 10 mA, I_C = 1 mA	V_{CEsat}	-	-	0.3	V
Cut-off frequency	V_{CE} = 5 V, I_F = 10 mA, R_L = 100 Ω	f_c	-	110	-	kHz
Coupling capacitance	f = 1 MHz	C_k	-	0.3	-	pF

Note

- Minimum and maximum values are testing requirements. Typical values are characteristics of the device and are the result of engineering evaluation. Typical values are for information only and are not part of the testing requirements.

For technical questions, contact: optocoupleranswers@vishay.com

THIS DOCUMENT IS SUBJECT TO CHANGE WITHOUT NOTICE. THE PRODUCTS DESCRIBED HEREIN AND THIS DOCUMENT ARE SUBJECT TO SPECIFIC DISCLAIMERS, SET FORTH AT www.vishay.com/doc?91000

CURRENT TRANSFER RATIO (T_{amb} = 25 °C, unless otherwise specified)							
PARAMETER	**TEST CONDITION**	**PART**	**SYMBOL**	**MIN.**	**TYP.**	**MAX.**	**UNIT**
I_C/I_F	V_{CE} = 5 V, I_F = 5 mA	TCLT1110	CTR	50	-	600	%
	V_{CE} = 5 V, I_F = 10 mA	TCLT1111	CTR	40	-	80	%
		TCLT1112	CTR	63	-	125	%
		TCLT1113	CTR	100	-	200	%
		TCLT1114	CTR	160	-	320	%
	V_{CE} = 5 V, I_F = 1 mA	TCLT1111	CTR	13	30	-	%
		TCLT1112	CTR	22	45	-	%
		TCLT1113	CTR	34	70	-	%
		TCLT1114	CTR	56	100	-	%
	V_{CE} = 5 V, I_F = 5 mA	TCLT1115	CTR	50	-	150	%
		TCLT1116	CTR	100	-	300	%
		TCLT1117	CTR	80	-	160	%
		TCLT1118	CTR	130	-	260	%
		TCLT1119	CTR	200	-	400	%

SAFETY AND INSULATION RATINGS				
PARAMETER	**TEST CONDITION**	**SYMBOL**	**VALUE**	**UNIT**
Tested withstanding isolation voltage	According to UL1577, t = 1 s	V_{ISO}	5000	V_{RMS}
Maximum transient isolation voltage	According to DIN EN 60747-5-5	V_{IOTM}	8000	V_{peak}
Maximum repetitive peak isolation voltage	According to DIN EN 60747-5-5	V_{IORM}	890	V_{peak}
Partial discharge test voltage - lot test (sample test)	t_{Tr} = 60 s, t_{test} = 10 s, (see figure 2)	V_{pd}	13 000	V
Isolation resistance	T_{amb} = 25 °C, V_{IO} = 500 V	R_{IO}	$\geq 10^{12}$	Ω
	T_{amb} = 100 °C, V_{IO} = 500 V	R_{IO}	$\geq 10^{11}$	Ω
	T_{amb} = 150 °C, V_{IO} = 500 V (construction test only)	R_{IO}	$\geq 10^{9}$	Ω
Output safety power		P_{SO}	265	mW
Input safety current		I_{SI}	130	mA
Input safety temperature		T_S	150	°C
Creepage distance	DIP-6, option 6		≥ 8	mm
Clearance distance	DIP-6, option 6		≥ 8	mm
Insulation distance (internal)			0.75	mm

Note

- As per IEC 60747-5-5, § 7.4.3.8.2, this optocoupler is suitable for “safe electrical insulation” only within the safety ratings. Compliance with the safety ratings shall be ensured by means of protective circuits.

For technical questions, contact: optocoupleranswers@vishay.com
THIS DOCUMENT IS SUBJECT TO CHANGE WITHOUT NOTICE. THE PRODUCTS DESCRIBED HEREIN AND THIS DOCUMENT ARE SUBJECT TO SPECIFIC DISCLAIMERS, SET FORTH AT www.vishay.com/doc?91000

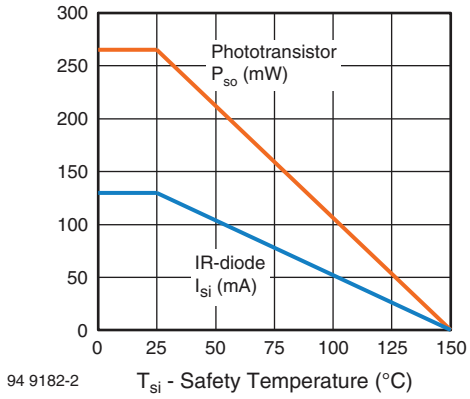

Fig. 1 - Derating Diagram

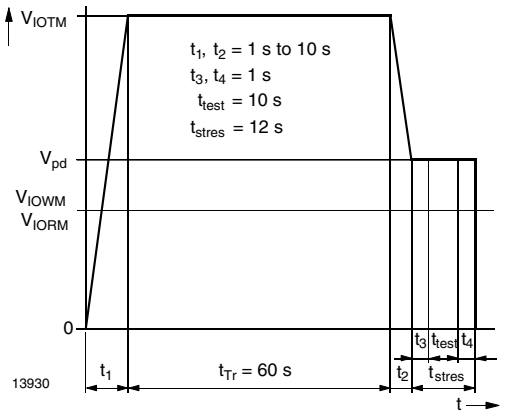

Fig. 2 - Test Pulse Diagram for Sample Test According to DIN EN 60747-5-5 (VDE 0884-5); IEC 60747-5-5

SWITCHING CHARACTERISTICS (T_{amb} = 25 °C, unless otherwise specified)						
PARAMETER	**TEST CONDITION**	**SYMBOL**	**MIN.**	**TYP.**	**MAX.**	**UNIT**
Delay time	V_S = 5 V, I_C = 2 mA, R_L = 100 Ω, (see Fig. 3)	t_d	-	3	-	µs
Rise time	V_S = 5 V, I_C = 2 mA, R_L = 100 Ω, (see Fig. 3)	t_r	-	3	-	µs
Fall time	V_S = 5 V, I_C = 2 mA, R_L = 100 Ω, (see Fig. 3)	t_f	-	4.7	-	µs
Storage time	V_S = 5 V, I_C = 2 mA, R_L = 100 Ω, (see Fig. 3)	t_s	-	0.3	-	µs
Turn-on time	V_S = 5 V, I_C = 2 mA, R_L = 100 Ω, (see Fig. 3)	t_{on}	-	6	-	µs
Turn-off time	V_S = 5 V, I_C = 2 mA, R_L = 100 Ω, (see Fig. 3)	t_{off}	-	5	-	µs
Turn-on time	V_S = 5 V, I_F = 10 mA, R_L = 1 kΩ, (see Fig. 4)	t_{on}	-	9	-	µs
Turn-off time	V_S = 5 V, I_F = 10 mA, R_L = 1 kΩ, (see Fig. 4)	t_{off}	-	10	-	µs

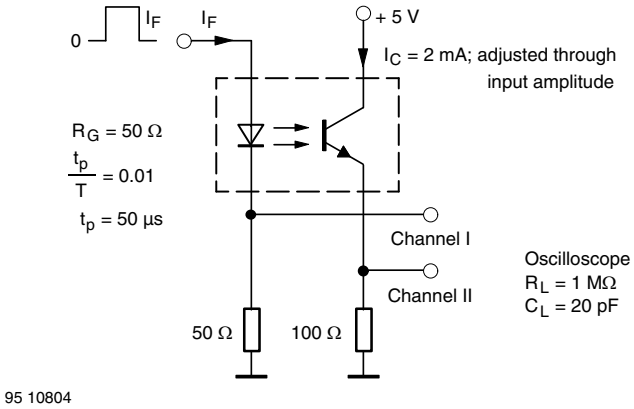

Fig. 3 - Test Circuit, Non-Saturated Operation

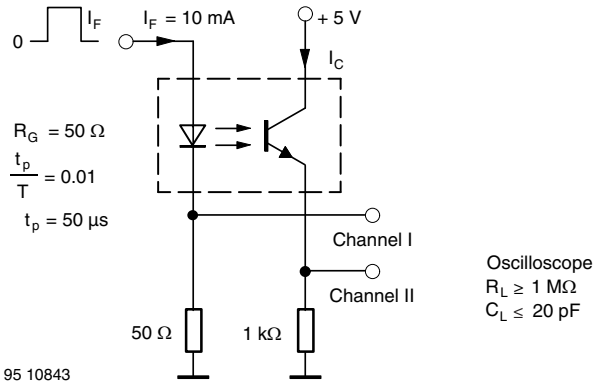

Fig. 4 - Test Circuit, Saturated Operation

For technical questions, contact: optocoupleranswers@vishay.com
THIS DOCUMENT IS SUBJECT TO CHANGE WITHOUT NOTICE. THE PRODUCTS DESCRIBED HEREIN AND THIS DOCUMENT ARE SUBJECT TO SPECIFIC DISCLAIMERS, SET FORTH AT www.vishay.com/doc?91000

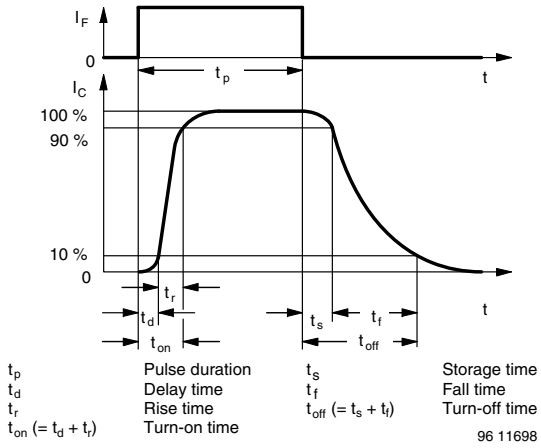

Fig. 5 - Switching Times

PACKAGE DIMENSIONS in millimeters

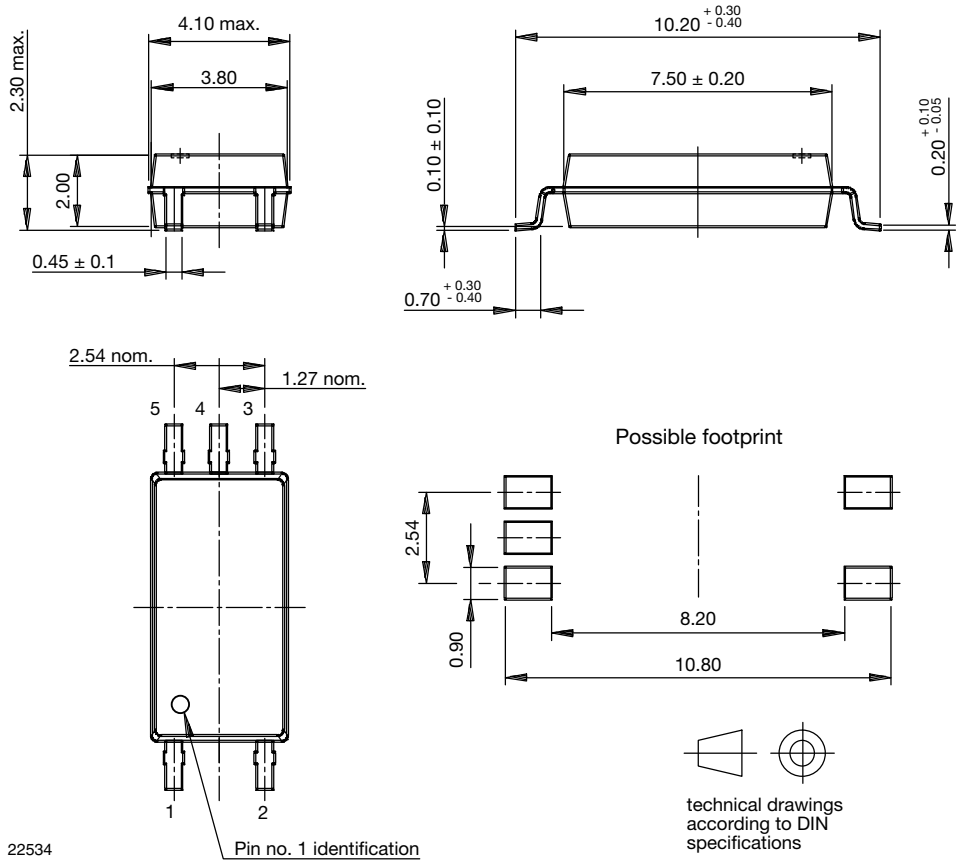

For technical questions, contact: optocoupleranswers@vishay.com

THIS DOCUMENT IS SUBJECT TO CHANGE WITHOUT NOTICE. THE PRODUCTS DESCRIBED HEREIN AND THIS DOCUMENT ARE SUBJECT TO SPECIFIC DISCLAIMERS, SET FORTH AT www.vishay.com/doc?91000

PACKAGE MARKING

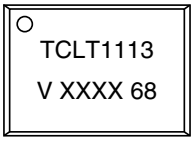

Note

- XXXX = LMC (lot marking code)

TAPE AND REEL DIMENSIONS (in millimeters)

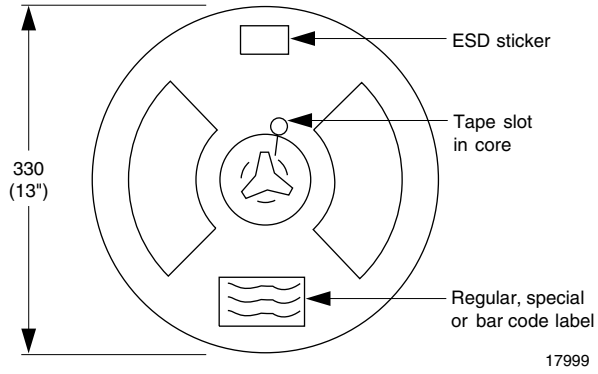

Fig. 6 - Reel Dimensions

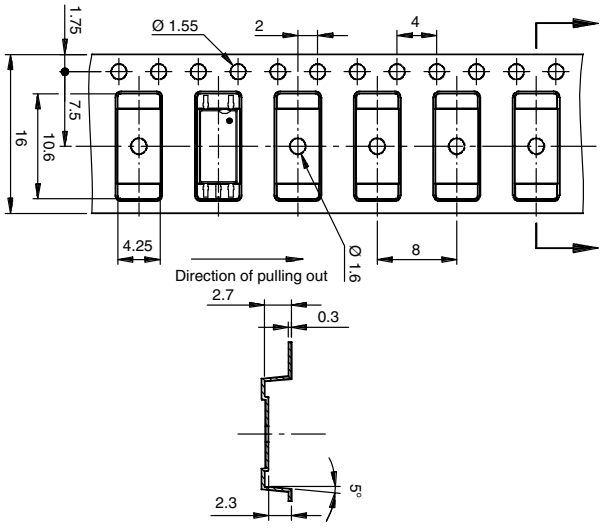

Fig. 7 - Tape Packing

SOLDER PROFILE

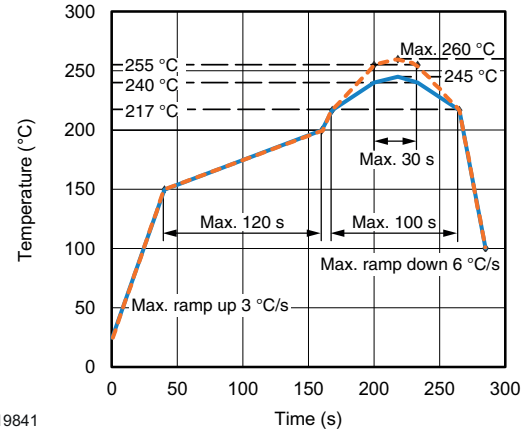

Fig. 8 - Lead (Pb)-free Reflow Solder Profile according to J-STD-020

HANDLING AND STORAGE CONDITIONS

ESD level: HBM class 2

Floor life: unlimited

Conditions: T_{amb} < 30 °C, RH < 85 %

Moisture sensitivity level 1, according to J-STD-020

For technical questions, contact: optocoupleranswers@vishay.com

THIS DOCUMENT IS SUBJECT TO CHANGE WITHOUT NOTICE. THE PRODUCTS DESCRIBED HEREIN AND THIS DOCUMENT ARE SUBJECT TO SPECIFIC DISCLAIMERS, SET FORTH AT www.vishay.com/doc?91000

Disclaimer

ALL PRODUCT, PRODUCT SPECIFICATIONS AND DATA ARE SUBJECT TO CHANGE WITHOUT NOTICE TO IMPROVE RELIABILITY, FUNCTION OR DESIGN OR OTHERWISE.

Vishay Intertechnology, Inc., its affiliates, agents, and employees, and all persons acting on its or their behalf (collectively, “Vishay”), disclaim any and all liability for any errors, inaccuracies or incompleteness contained in any datasheet or in any other disclosure relating to any product.

Vishay makes no warranty, representation or guarantee regarding the suitability of the products for any particular purpose or the continuing production of any product. To the maximum extent permitted by applicable law, Vishay disclaims (i) any and all liability arising out of the application or use of any product, (ii) any and all liability, including without limitation special, consequential or incidental damages, and (iii) any and all implied warranties, including warranties of fitness for particular purpose, non-infringement and merchantability.

Statements regarding the suitability of products for certain types of applications are based on Vishay's knowledge of typical requirements that are often placed on Vishay products in generic applications. Such statements are not binding statements about the suitability of products for a particular application. It is the customer's responsibility to validate that a particular product with the properties described in the product specification is suitable for use in a particular application. Parameters provided in datasheets and / or specifications may vary in different applications and performance may vary over time. All operating parameters, including typical parameters, must be validated for each customer application by the customer's technical experts. Product specifications do not expand or otherwise modify Vishay's terms and conditions of purchase, including but not limited to the warranty expressed therein.

Hyperlinks included in this datasheet may direct users to third-party websites. These links are provided as a convenience and for informational purposes only. Inclusion of these hyperlinks does not constitute an endorsement or an approval by Vishay of any of the products, services or opinions of the corporation, organization or individual associated with the third-party website. Vishay disclaims any and all liability and bears no responsibility for the accuracy, legality or content of the third-party website or for that of subsequent links.

Vishay products are not designed for use in life-saving or life-sustaining applications or any application in which the failure of the Vishay product could result in personal injury or death unless specifically qualified in writing by Vishay. Customers using or selling Vishay products not expressly indicated for use in such applications do so at their own risk. Please contact authorized Vishay personnel to obtain written terms and conditions regarding products designed for such applications.

No license, express or implied, by estoppel or otherwise, to any intellectual property rights is granted by this document or by any conduct of Vishay. Product names and markings noted herein may be trademarks of their respective owners.

© 2024 VISHAY INTERTECHNOLOGY, INC. ALL RIGHTS RESERVED

THIS DOCUMENT IS SUBJECT TO CHANGE WITHOUT NOTICE. THE PRODUCTS DESCRIBED HEREIN AND THIS DOCUMENT ARE SUBJECT TO SPECIFIC DISCLAIMERS, SET FORTH AT www.vishay.com/doc?91000