Infrared Emitting Diode, 875 nm, GaAlAs

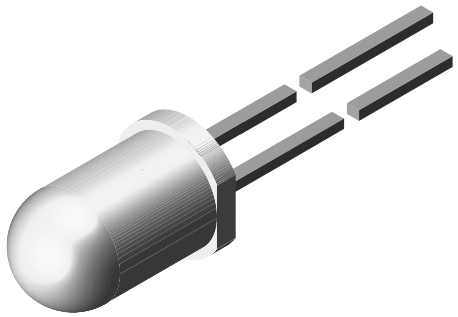

FEATURES

- Package type: leaded
- Package form: T-1¾
- Dimensions (in mm): Ø 5
- Peak wavelength: λ_p = 875 nm
- High reliability
- Angle of half intensity: φ = ± 12°
- Low forward voltage
- Suitable for high pulse current operation
- Good spectral matching with Si photodetectors
- Material categorization: for definitions of compliance please see www.vishay.com/doc?99912

Pb

e3

RoHS COMPLIANT

HALOGEN FREE GREEN (5-2008)

DESCRIPTION

The TSHA620. series are infrared, 875 nm emitting diodes in GaAlAs technology, molded in a clear, untinted plastic package.

APPLICATIONS

- Infrared remote control and free air data transmission systems
- This emitter series is dedicated to systems with panes in transmission space between emitter and detector, because of the low absorbtion of 875 nm radiation in glass

PRODUCT SUMMARY				
COMPONENT	I_e (mW/sr)	φ (°)	λ_p (nm)	t_r (ns)
TSHA6200	40	± 12	875	600
TSHA6201	50	± 12	875	600
TSHA6202	60	± 12	875	600
TSHA6203	65	± 12	875	600

Note

- Test conditions see table “Basic Characteristics“

ORDERING INFORMATION			
ORDERING CODE	PACKAGING	REMARKS	PACKAGE FORM
TSHA6200	Bulk	MOQ: 4000 pcs, 4000 pcs/bulk	T-1¾
TSHA6201	Bulk	MOQ: 4000 pcs, 4000 pcs/bulk	T-1¾
TSHA6202	Bulk	MOQ: 4000 pcs, 4000 pcs/bulk	T-1¾
TSHA6203	Bulk	MOQ: 4000 pcs, 4000 pcs/bulk	T-1¾

Note

- MOQ: minimum order quantity

For technical questions, contact: emittertechsupport@vishay.com

THIS DOCUMENT IS SUBJECT TO CHANGE WITHOUT NOTICE. THE PRODUCTS DESCRIBED HEREIN AND THIS DOCUMENT ARE SUBJECT TO SPECIFIC DISCLAIMERS, SET FORTH AT www.vishay.com/doc?91000

ABSOLUTE MAXIMUM RATINGS (T_{amb} = 25 °C, unless otherwise specified)				
PARAMETER	**TEST CONDITION**	**SYMBOL**	**VALUE**	**UNIT**
Reverse voltage		V_R	5	V
Forward current		I_F	100	mA
Peak forward current	t_p/T = 0.5, t_p = 100 µs	I_{FM}	200	mA
Surge forward current	t_p = 100 µs	I_{FSM}	2.5	A
Power dissipation		P_V	180	mW
Junction temperature		T_j	100	°C
Operating temperature range		T_{amb}	-40 to +85	°C
Storage temperature range		T_{stg}	-40 to +100	°C
Soldering temperature	t ≤ 5 s, 2 mm from case	T_{sd}	260	°C
Thermal resistance junction to ambient	J-STD-051, leads 7 mm, soldered on PCB	R_{thJA}	230	K/W

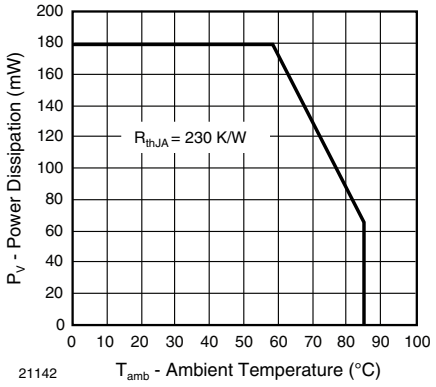

Fig. 1 - Power Dissipation Limit vs. Ambient Temperature

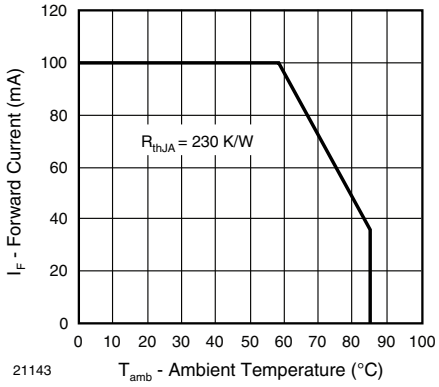

Fig. 2 - Forward Current Limit vs. Ambient Temperature

BASIC CHARACTERISTICS (T_{amb} = 25 °C, unless otherwise specified)						
PARAMETER	**TEST CONDITION**	**SYMBOL**	**MIN.**	**TYP.**	**MAX.**	**UNIT**
Forward voltage	I_F = 100 mA, t_p = 20 ms	V_F	-	1.5	1.8	V
Temperature coefficient of V_F	I_F = 100 mA	TK_{VF}	-	-1.6	-	mV/K
Reverse current	V_R = 5 V	I_R	-	-	100	µA
Junction capacitance	V_R = 0 V, f = 1 MHz, E = 0	C_j	-	20	-	pF
Temperature coefficient of ϕ_e	I_F = 20 mA	$TK\phi_e$	-	-0.7	-	%/K
Angle of half intensity		φ	-	± 12	-	°
Peak wavelength	I_F = 100 mA	λ_p	-	875	-	nm
Spectral bandwidth	I_F = 100 mA	Δλ	-	80	-	nm
Temperature coefficient of λ_p	I_F = 100 mA	$TK\lambda_p$	-	0.2	-	nm/K
Rise time	I_F = 100 mA	t_r	-	600	-	ns
	I_F = 1 A	t_r	-	300	-	ns
Fall time	I_F = 100 mA	t_f	-	600	-	ns
	I_F = 1 A	t_f	-	300	-	ns
Virtual source diameter		d	-	3.7	-	mm

For technical questions, contact: emittertechsupport@vishay.com

THIS DOCUMENT IS SUBJECT TO CHANGE WITHOUT NOTICE. THE PRODUCTS DESCRIBED HEREIN AND THIS DOCUMENT ARE SUBJECT TO SPECIFIC DISCLAIMERS, SET FORTH AT www.vishay.com/doc?91000

TYPE DEDICATED CHARACTERISTICS (T_{amb} = 25 °C, unless otherwise specified)							
PARAMETER	TEST CONDITION	PART	SYMBOL	MIN.	TYP.	MAX.	UNIT
Forward voltage	I_F = 1 A, t_p = 100 µs	TSHA6200	V_F	-	2.8	3.5	V
		TSHA6201	V_F	-	2.8	3.5	V
		TSHA6202	V_F	-	2.8	3.5	V
		TSHA6203	V_F	-	2.8	3.5	V
Radiant intensity	I_F = 100 mA, t_p = 20 ms	TSHA6200	I_e	25	40	125	mW/sr
		TSHA6201	I_e	30	50	125	mW/sr
		TSHA6202	I_e	36	60	125	mW/sr
		TSHA6203	I_e	50	65	125	mW/sr
	I_F = 1 A, t_p = 100 µs	TSHA6200	I_e	200	330	-	mW/sr
		TSHA6201	I_e	260	400	-	mW/sr
		TSHA6202	I_e	330	460	-	mW/sr
		TSHA6203	I_e	400	530	-	mW/sr
Radiant power	I_F = 100 mA, t_p = 20 ms	TSHA6200	ϕ_e	-	22	-	mW
		TSHA6201	ϕ_e	-	23	-	mW
		TSHA6202	ϕ_e	-	24	-	mW
		TSHA6203	ϕ_e	-	25	-	mW

BASIC CHARACTERISTICS (T_{amb} = 25 °C, unless otherwise specified)

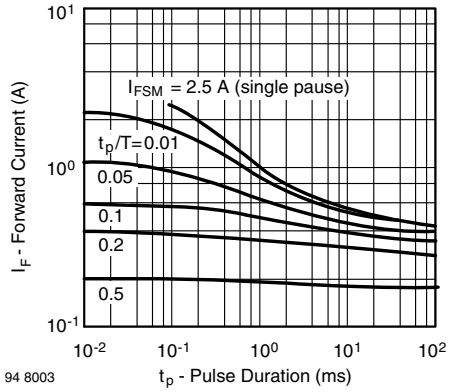

Fig. 3 - Pulse Forward Current vs. Pulse Duration

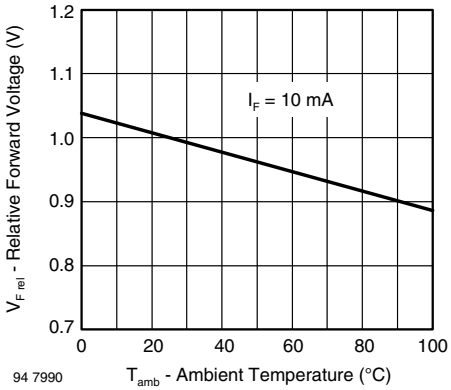

Fig. 5 - Relative Forward Voltage vs. Ambient Temperature

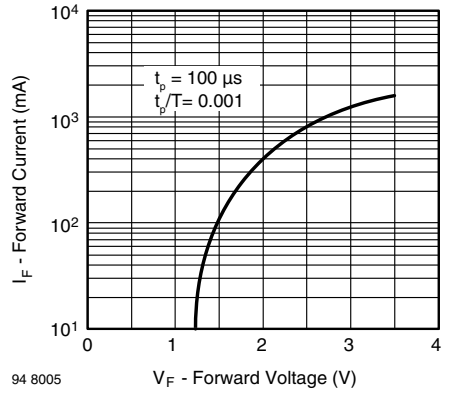

Fig. 4 - Forward Current vs. Forward Voltage

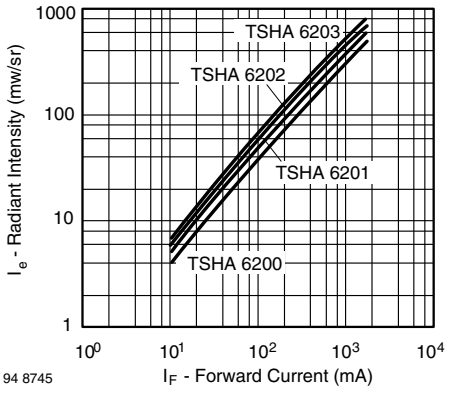

Fig. 6 - Radiant Intensity vs. Forward Current

For technical questions, contact: emittertechsupport@vishay.com

THIS DOCUMENT IS SUBJECT TO CHANGE WITHOUT NOTICE. THE PRODUCTS DESCRIBED HEREIN AND THIS DOCUMENT ARE SUBJECT TO SPECIFIC DISCLAIMERS, SET FORTH AT www.vishay.com/doc?91000

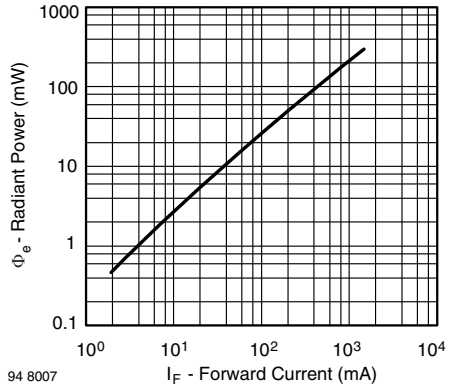

Fig. 7 - Radiant Power vs. Forward Current

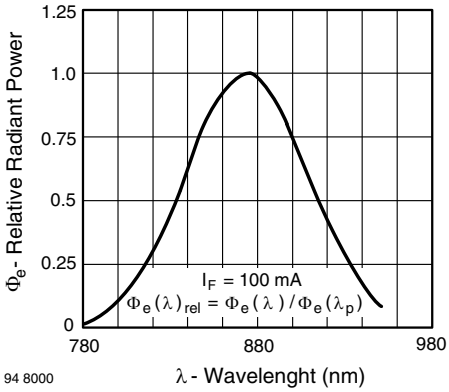

Fig. 9 - Relative Radiant Power vs. Wavelength

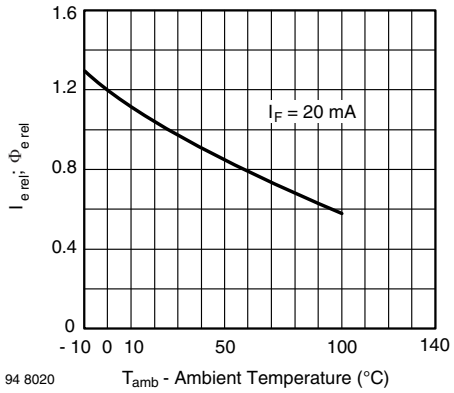

Fig. 8 - Relative Radiant Intensity/Power vs. Ambient Temperature

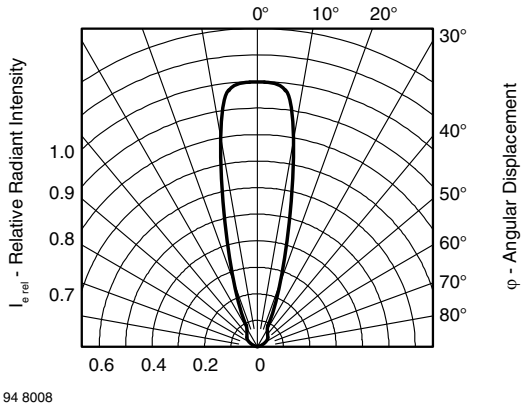

Fig. 10 - Relative Radiant Intensity vs. Angular Displacement

For technical questions, contact: emittertechsupport@vishay.com

THIS DOCUMENT IS SUBJECT TO CHANGE WITHOUT NOTICE. THE PRODUCTS DESCRIBED HEREIN AND THIS DOCUMENT ARE SUBJECT TO SPECIFIC DISCLAIMERS, SET FORTH AT www.vishay.com/doc?91000

PACKAGE DIMENSIONS in millimeters

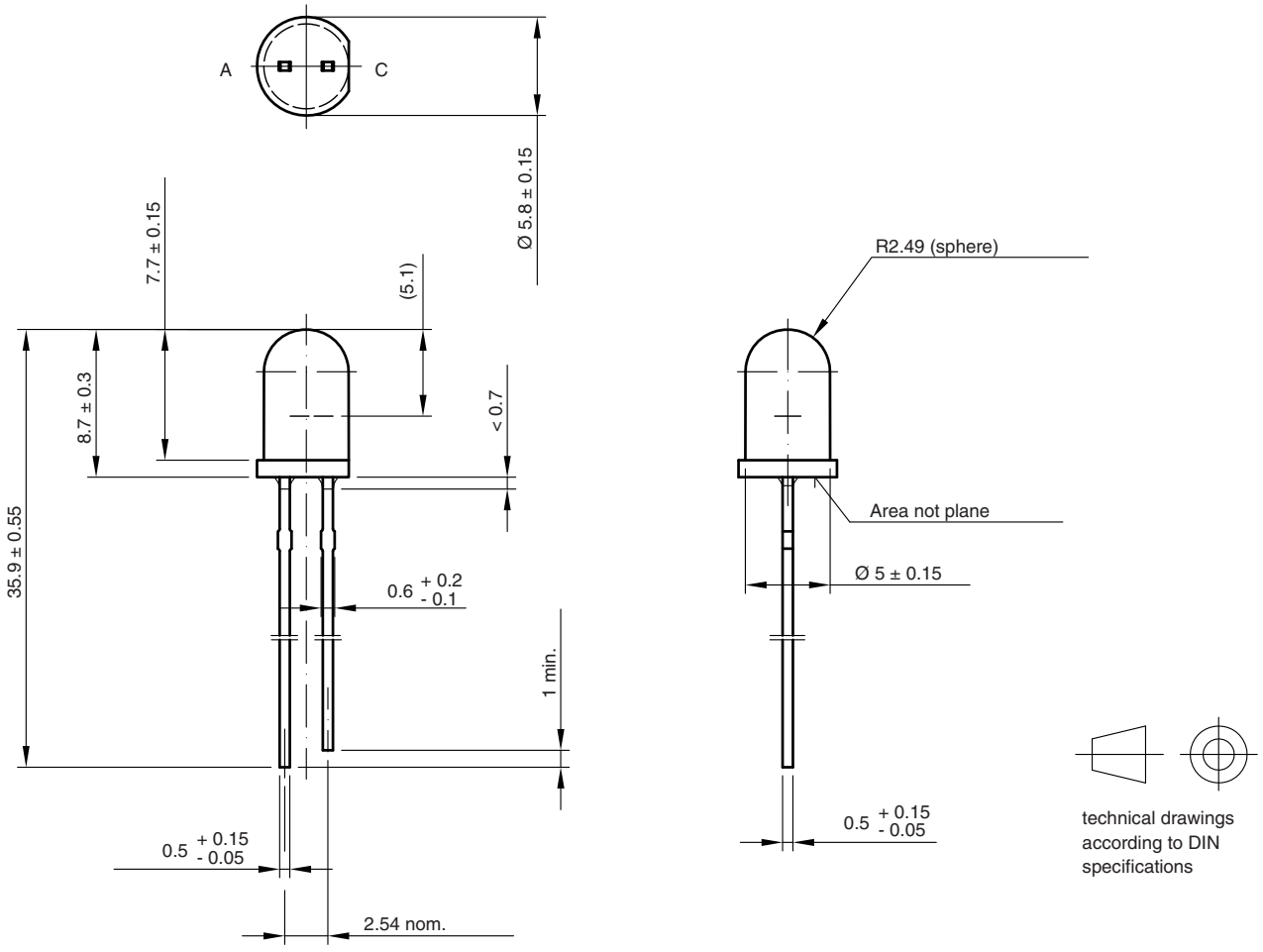

Drawing-No.: 6.544-5259.04-4
Issue: 8; 19.05.09
96 12125

For technical questions, contact: emittertechsupport@vishay.com

THIS DOCUMENT IS SUBJECT TO CHANGE WITHOUT NOTICE. THE PRODUCTS DESCRIBED HEREIN AND THIS DOCUMENT ARE SUBJECT TO SPECIFIC DISCLAIMERS, SET FORTH AT www.vishay.com/doc?91000

Disclaimer

ALL PRODUCT, PRODUCT SPECIFICATIONS AND DATA ARE SUBJECT TO CHANGE WITHOUT NOTICE TO IMPROVE RELIABILITY, FUNCTION OR DESIGN OR OTHERWISE.

Vishay Intertechnology, Inc., its affiliates, agents, and employees, and all persons acting on its or their behalf (collectively, “Vishay”), disclaim any and all liability for any errors, inaccuracies or incompleteness contained in any datasheet or in any other disclosure relating to any product.

Vishay makes no warranty, representation or guarantee regarding the suitability of the products for any particular purpose or the continuing production of any product. To the maximum extent permitted by applicable law, Vishay disclaims (i) any and all liability arising out of the application or use of any product, (ii) any and all liability, including without limitation special, consequential or incidental damages, and (iii) any and all implied warranties, including warranties of fitness for particular purpose, non-infringement and merchantability.

Statements regarding the suitability of products for certain types of applications are based on Vishay's knowledge of typical requirements that are often placed on Vishay products in generic applications. Such statements are not binding statements about the suitability of products for a particular application. It is the customer's responsibility to validate that a particular product with the properties described in the product specification is suitable for use in a particular application. Parameters provided in datasheets and / or specifications may vary in different applications and performance may vary over time. All operating parameters, including typical parameters, must be validated for each customer application by the customer's technical experts. Product specifications do not expand or otherwise modify Vishay's terms and conditions of purchase, including but not limited to the warranty expressed therein.

Hyperlinks included in this datasheet may direct users to third-party websites. These links are provided as a convenience and for informational purposes only. Inclusion of these hyperlinks does not constitute an endorsement or an approval by Vishay of any of the products, services or opinions of the corporation, organization or individual associated with the third-party website. Vishay disclaims any and all liability and bears no responsibility for the accuracy, legality or content of the third-party website or for that of subsequent links.

Vishay products are not designed for use in life-saving or life-sustaining applications or any application in which the failure of the Vishay product could result in personal injury or death unless specifically qualified in writing by Vishay. Customers using or selling Vishay products not expressly indicated for use in such applications do so at their own risk. Please contact authorized Vishay personnel to obtain written terms and conditions regarding products designed for such applications.

No license, express or implied, by estoppel or otherwise, to any intellectual property rights is granted by this document or by any conduct of Vishay. Product names and markings noted herein may be trademarks of their respective owners.

© 2024 VISHAY INTERTECHNOLOGY, INC. ALL RIGHTS RESERVED

THIS DOCUMENT IS SUBJECT TO CHANGE WITHOUT NOTICE. THE PRODUCTS DESCRIBED HEREIN AND THIS DOCUMENT ARE SUBJECT TO SPECIFIC DISCLAIMERS, SET FORTH AT www.vishay.com/doc?91000