Dual Photovoltaic MOSFET Driver Solid-State Relay

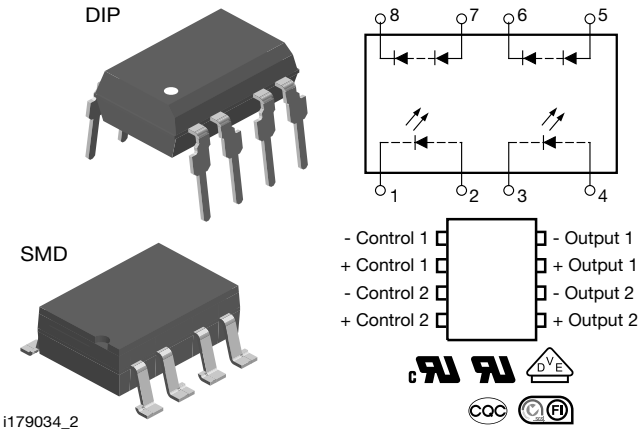

FEATURES

- High open circuit voltage, up to 15.4 V typical
- High short circuit current, up to 50 µA typical
- Isolation test voltage 5300 V_{RMS}
- Logic compatible input
- High reliability
- Material categorization: for definitions of compliance please see www.vishay.com/doc?99912

Pb-free
e3
RoHS COMPLIANT

APPLICATIONS

- High side driver
- Solid-state relays
- Floating power supply
- Power control
- Data acquisition
- ATE
- Isolated switching

LINKS TO ADDITIONAL RESOURCES

Related Documents | Design Tools | Models | Footprints | Schematics

DESCRIPTION

The VO1263AB and VO1263AAC photovoltaic MOSFET driver consists of two LEDs optically coupled to two photodiode arrays. The photodiode array provides a floating source with adequate voltage and current to drive high power MOSFET transistors. Optical coupling provides a high I/O isolation voltage. In order to turn the MOSFET off, an external resistance (gate-to-source) is required for gate discharge.

AGENCY APPROVALS

- UL
- cUL
- DIN EN 60747-5 (VDE 0884-5)
- BSI
- CQC
- FIMKO

ORDERING INFORMATION

V	O	1	2	6	3	#	#	#	T	R
PART NUMBER						ELECTR. VARIATION	PACKAGE CONFIG.		TAPE AND REEL	

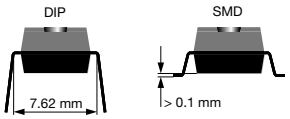

PACKAGE	UL, cUL, VDE, BSI, CQC, FIMKO
SMD-8	VO1263AAC
SMD-8, tape and reel	VO1263AACTR
DIP-8	VO1263AB

ABSOLUTE MAXIMUM RATINGS (T_{amb} = 25 °C, unless otherwise specified)

PARAMETER	TEST CONDITION	SYMBOL	VALUE	UNIT
SSR				
LED input ratings continuous forward current		I_F	50	mA
LED input ratings reverse voltage	$I_R \leq 10$ µA	V_R	5.0	V
Photodiode array reverse voltage	$I_R \leq 2.0$ µA	V_R	100	V
Ambient operating temperature range		T_{amb}	-40 to +100	°C
Storage temperature range		T_{stg}	-40 to +150	°C
Pin soldering temperature	t = 7.0 s max.	T_{sld}	270	°C

Note

- Stresses in excess of the absolute maximum ratings can cause permanent damage to the device. Functional operation of the device is not implied at these or any other conditions in excess of those given in the operational sections of this document. Exposure to absolute maximum ratings for extended periods of the time can adversely affect reliability

For technical questions, contact: optocoupleranswers@vishay.com
THIS DOCUMENT IS SUBJECT TO CHANGE WITHOUT NOTICE. THE PRODUCTS DESCRIBED HEREIN AND THIS DOCUMENT ARE SUBJECT TO SPECIFIC DISCLAIMERS, SET FORTH AT www.vishay.com/doc?91000

ELECTRICAL CHARACTERISTICS (T_{amb} = 25 °C, unless otherwise specified)						
PARAMETER	**TEST CONDITION**	**SYMBOL**	**MIN.**	**TYP.**	**MAX.**	**UNIT**
LED forward voltage	I_F = 10 mA	V_F	1.2	1.4	1.7	V
Detector reverse voltage	I_R = 2.0 µA	$V_{R(PDA)}$	-	350	-	V
Open circuit voltage (pins 5, 6 or 7, 8)	I_F = 5.0 mA	V_{OC}	-	14.2	-	V
	I_F = 10 mA	V_{OC}	10.3	14.7	16.5	V
	I_F = 15 mA	V_{OC}	-	15	-	V
	I_F = 20 mA	V_{OC}	-	15.2	-	V
	I_F = 30 mA	V_{OC}	-	15.4	-	V
Short circuit current (pins 5, 6 or 7, 8)	I_F = 5.0 mA	I_{SC}	2.7	7	-	µA
	I_F = 10 mA	I_{SC}	7	15	-	µA
	I_F = 15 mA	I_{SC}	11	24	-	µA
	I_F = 20 mA	I_{SC}	15	33	-	µA
	I_F = 30 mA	I_{SC}	21	50	-	µA

Note

- Minimum and maximum values are testing requirements. Typical values are characteristics of the device and are the result of engineering evaluations. Typical values are for information only and are not part of the testing requirements

SWITCHING CHARACTERISTICS (T_{amb} = 25 °C, unless otherwise specified)						
PARAMETER	**TEST CONDITION**	**SYMBOL**	**MIN.**	**TYP.**	**MAX.**	**UNIT**
Turn-on time	I_F = 20 mA (1)	t_{on}	-	35	-	µs
Turn-off time	I_F = 20 mA (1)	t_{off}	-	150	-	µs

Note

(1) f = 100 Hz, pulse width = 2 ms, load (R_L) = 1.0 MΩ, C_L = 15 pF; measured at 90 % rated voltage (t_{on}), 10 % rated voltage (t_{off}). Actuation speed depends upon the external t_{on} and t_{off} circuitry and the capacitance of the MOSFET

SAFETY AND INSULATION RATINGS				
PARAMETER	**TEST CONDITION**	**SYMBOL**	**VALUE**	**UNIT**
Climatic classification	According to IEC 68 part 1		40 / 100 / 21	
Pollution degree	According to DIN VDE 0109		2	
Comparative tracking index	Insulation group IIIa	CTI	175	
Maximum rated withstanding isolation voltage	According to UL1577, t = 1 min	V_{ISO}	5300	V_{RMS}
Maximum transient isolation voltage	According to DIN EN 60747-5-5	V_{IOTM}	8000	V_{peak}
Maximum repetitive peak isolation voltage	According to DIN EN 60747-5-5	V_{IORM}	890	V_{peak}
Output safety power		P_{SO}	700	mW
Input safety current		I_{SI}	300	mA
Input safety temperature		T_S	175	°C
Creepage distance	DIP-8, SMD-8		≥ 7	mm
Clearance distance			≥ 7	mm

Note

- This optocoupler is suitable for “safe electrical insulation” only within the safety ratings. Compliance with the safety ratings shall be ensured by means of suitable protective circuits

For technical questions, contact: optocoupleranswers@vishay.com
THIS DOCUMENT IS SUBJECT TO CHANGE WITHOUT NOTICE. THE PRODUCTS DESCRIBED HEREIN AND THIS DOCUMENT ARE SUBJECT TO SPECIFIC DISCLAIMERS, SET FORTH AT www.vishay.com/doc?91000

FUNCTIONAL DESCRIPTION

Fig. 1 outlines the IV characteristics of the illuminated photodiode array (PDA). For operation at voltages below V_{OC}, the PDA acts as a nearly constant current source. The actual region of operation depends upon the load.

The amount of current applied to the LED (pins 1 and 2 or 3 and 4) determines the amount of light produced for the PDA. For high temperature operation, more LED current may be required.

TYPICAL CHARACTERISTICS (T_{amb} = 25 °C, unless otherwise specified)

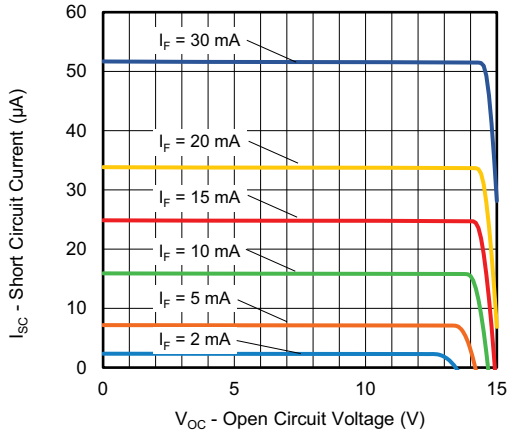

Fig. 1 - Short Circuit Current vs. Open Circuit Voltage

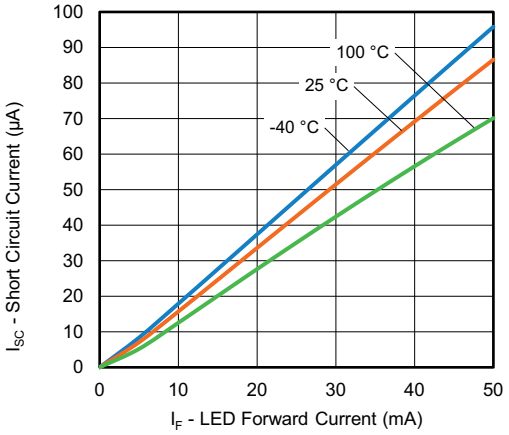

Fig. 3 - Short Circuit Current vs. LED Forward Current

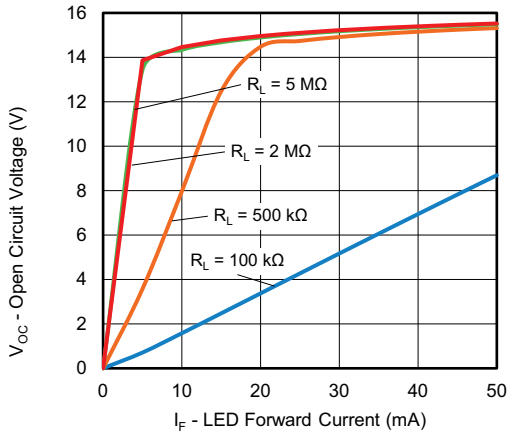

Fig. 2 - Output Voltage vs. LED Current

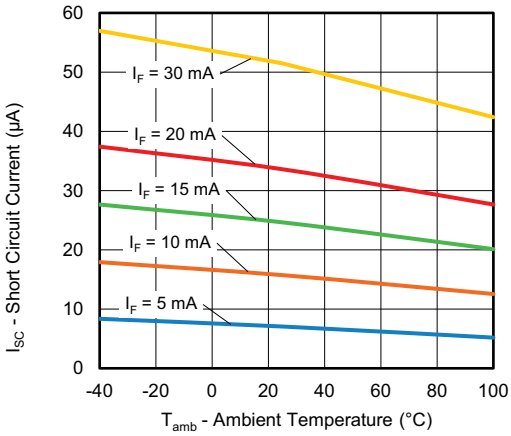

Fig. 4 - Short Circuit Current vs. Ambient Temperature

For technical questions, contact: optocoupleranswers@vishay.com
THIS DOCUMENT IS SUBJECT TO CHANGE WITHOUT NOTICE. THE PRODUCTS DESCRIBED HEREIN AND THIS DOCUMENT ARE SUBJECT TO SPECIFIC DISCLAIMERS, SET FORTH AT www.vishay.com/doc?91000

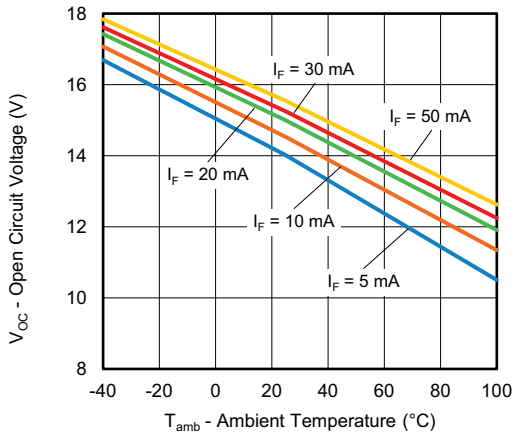

Fig. 5 - Open Circuit Voltage vs. Ambient Temperature

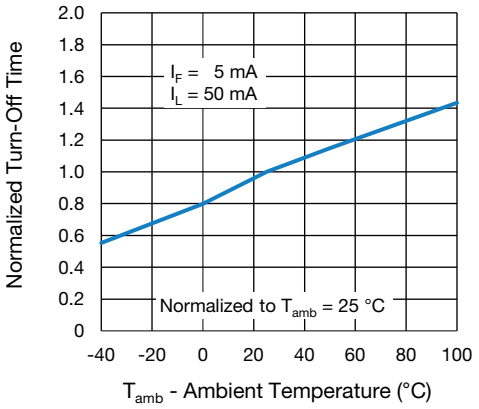

Fig. 8 - Normalized Turn-Off Time vs. Ambient Temperature

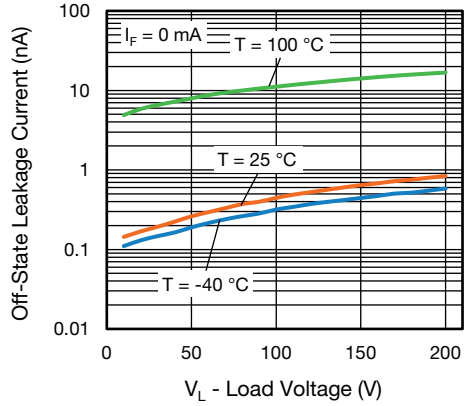

Fig. 6 - Leakage Current vs. Load Voltage

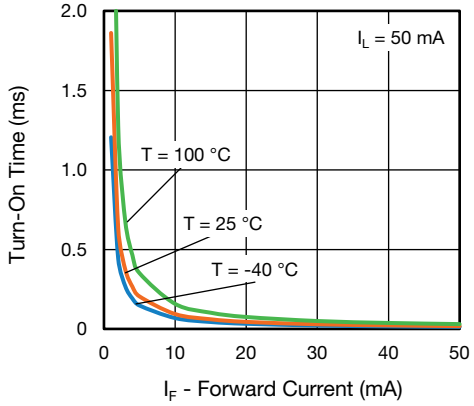

Fig. 9 - Turn-On Time vs. Forward Current

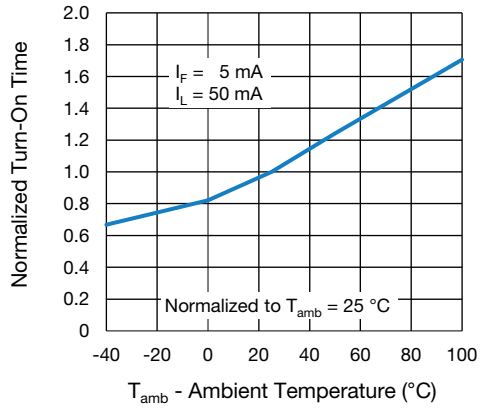

Fig. 7 - Normalized Turn-On Time vs. Ambient Temperature

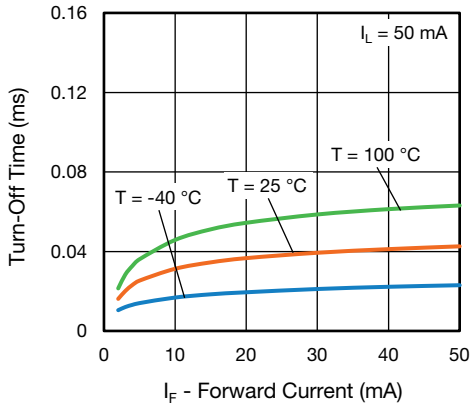

Fig. 10 - Turn-Off Time vs. Forward Current

For technical questions, contact: optocoupleranswers@vishay.com
THIS DOCUMENT IS SUBJECT TO CHANGE WITHOUT NOTICE. THE PRODUCTS DESCRIBED HEREIN AND THIS DOCUMENT ARE SUBJECT TO SPECIFIC DISCLAIMERS, SET FORTH AT www.vishay.com/doc?91000

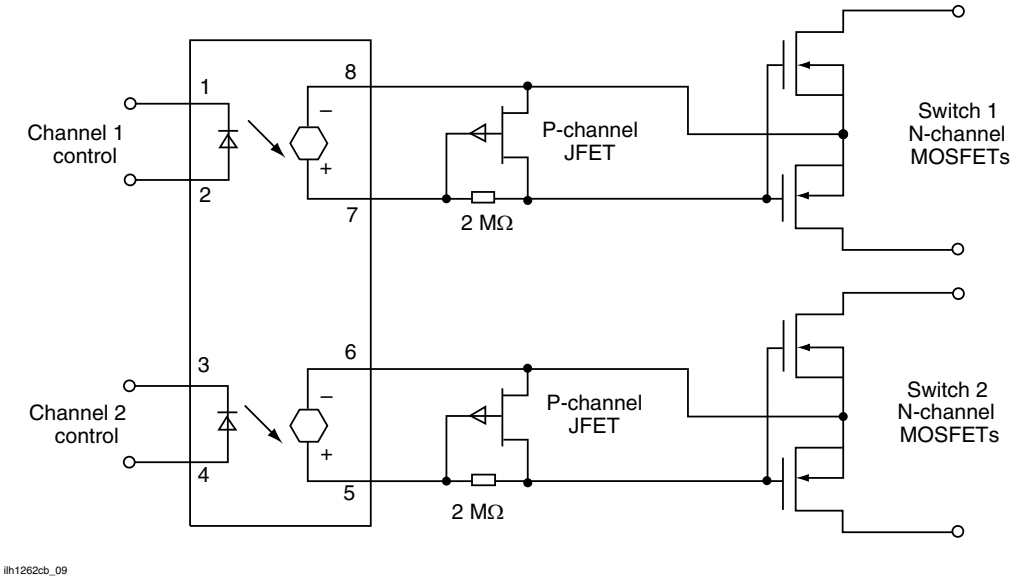

Fig. 11 - Typical Dual Form A Solid-State Relay Application

PACKAGE DIMENSIONS in millimeters

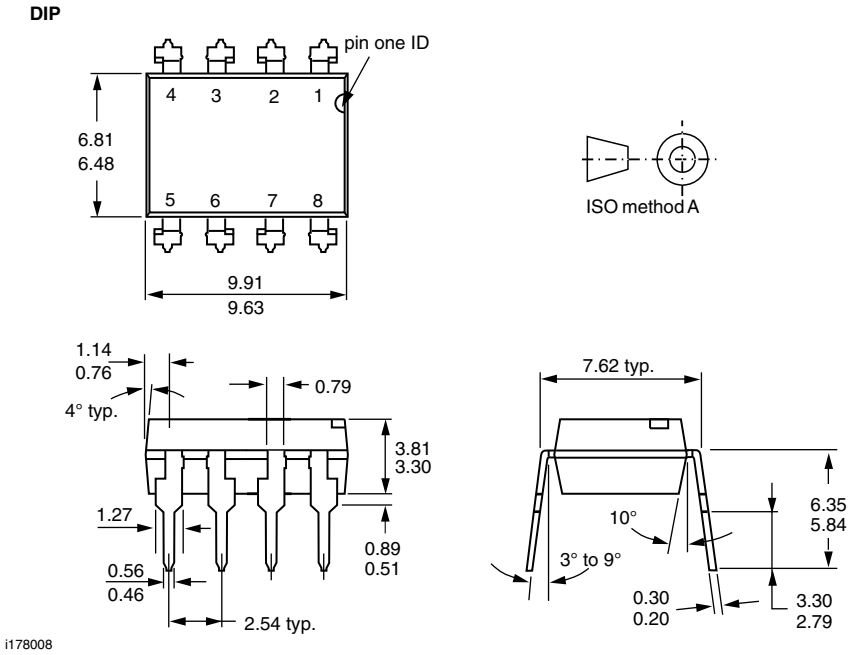

For technical questions, contact: optocoupleranswers@vishay.com
THIS DOCUMENT IS SUBJECT TO CHANGE WITHOUT NOTICE. THE PRODUCTS DESCRIBED HEREIN AND THIS DOCUMENT ARE SUBJECT TO SPECIFIC DISCLAIMERS, SET FORTH AT www.vishay.com/doc?91000

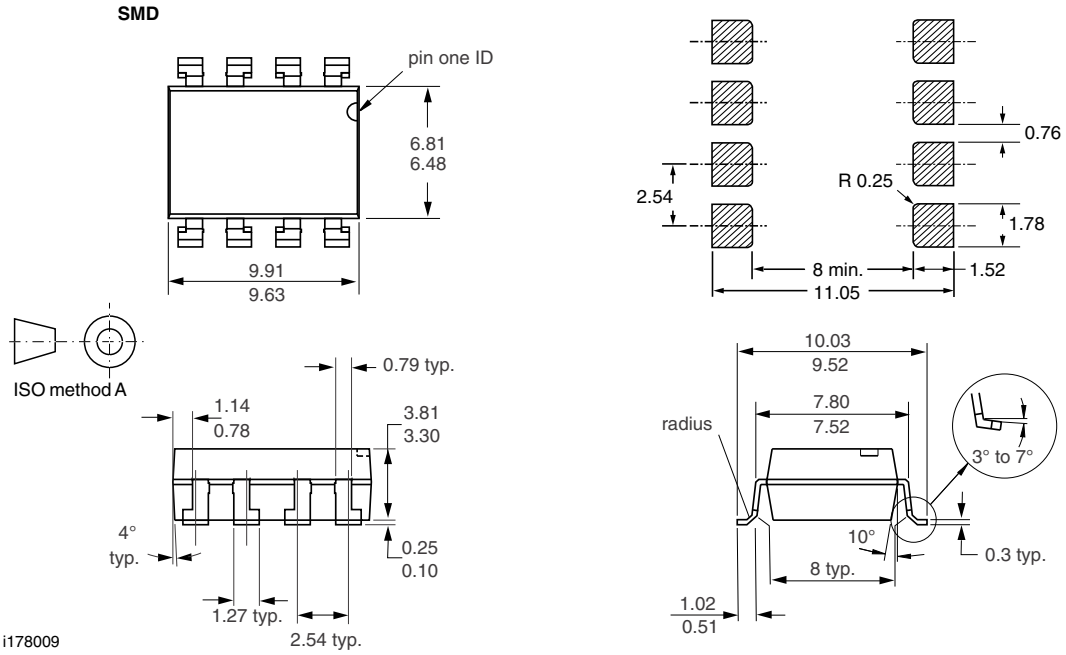

PACKAGE MARKING (example)

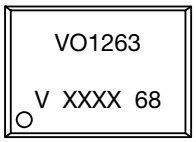

Fig. 12 - Example of VO1263AAC

Note

- XXXX = LMC (lot marking code)

SOLDER PROFILES

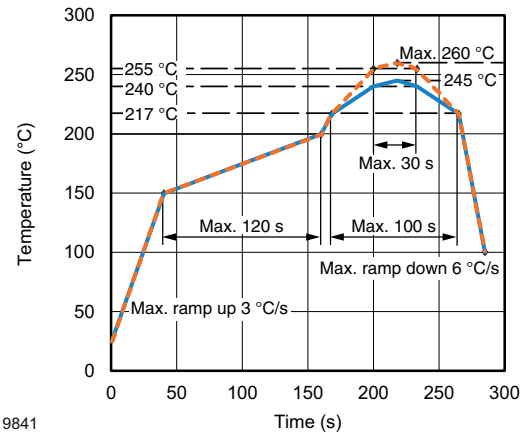

Fig. 13 - Lead (Pb)-free Reflow Solder Profile
According to J-STD-020 for SMD Devices

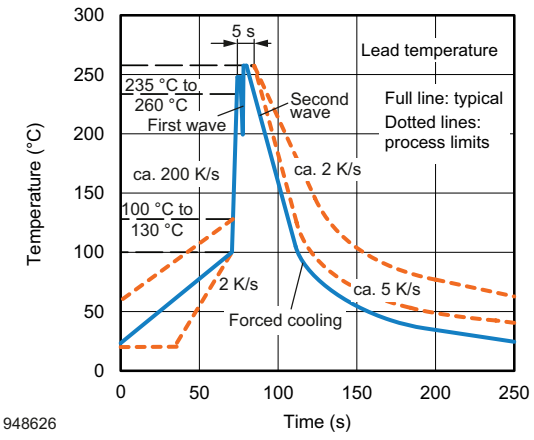

Fig. 14 - Wave Soldering Double Wave Profile
According to J-STD-020 for DIP Devices

For technical questions, contact: optocoupleranswers@vishay.com
THIS DOCUMENT IS SUBJECT TO CHANGE WITHOUT NOTICE. THE PRODUCTS DESCRIBED HEREIN AND THIS DOCUMENT ARE SUBJECT TO SPECIFIC DISCLAIMERS, SET FORTH AT www.vishay.com/doc?91000

Disclaimer

ALL PRODUCT, PRODUCT SPECIFICATIONS AND DATA ARE SUBJECT TO CHANGE WITHOUT NOTICE TO IMPROVE RELIABILITY, FUNCTION OR DESIGN OR OTHERWISE.

Vishay Intertechnology, Inc., its affiliates, agents, and employees, and all persons acting on its or their behalf (collectively, “Vishay”), disclaim any and all liability for any errors, inaccuracies or incompleteness contained in any datasheet or in any other disclosure relating to any product.

Vishay makes no warranty, representation or guarantee regarding the suitability of the products for any particular purpose or the continuing production of any product. To the maximum extent permitted by applicable law, Vishay disclaims (i) any and all liability arising out of the application or use of any product, (ii) any and all liability, including without limitation special, consequential or incidental damages, and (iii) any and all implied warranties, including warranties of fitness for particular purpose, non-infringement and merchantability.

Statements regarding the suitability of products for certain types of applications are based on Vishay's knowledge of typical requirements that are often placed on Vishay products in generic applications. Such statements are not binding statements about the suitability of products for a particular application. It is the customer's responsibility to validate that a particular product with the properties described in the product specification is suitable for use in a particular application. Parameters provided in datasheets and / or specifications may vary in different applications and performance may vary over time. All operating parameters, including typical parameters, must be validated for each customer application by the customer's technical experts. Product specifications do not expand or otherwise modify Vishay's terms and conditions of purchase, including but not limited to the warranty expressed therein.

Hyperlinks included in this datasheet may direct users to third-party websites. These links are provided as a convenience and for informational purposes only. Inclusion of these hyperlinks does not constitute an endorsement or an approval by Vishay of any of the products, services or opinions of the corporation, organization or individual associated with the third-party website. Vishay disclaims any and all liability and bears no responsibility for the accuracy, legality or content of the third-party website or for that of subsequent links.

Vishay products are not designed for use in life-saving or life-sustaining applications or any application in which the failure of the Vishay product could result in personal injury or death unless specifically qualified in writing by Vishay. Customers using or selling Vishay products not expressly indicated for use in such applications do so at their own risk. Please contact authorized Vishay personnel to obtain written terms and conditions regarding products designed for such applications.

No license, express or implied, by estoppel or otherwise, to any intellectual property rights is granted by this document or by any conduct of Vishay. Product names and markings noted herein may be trademarks of their respective owners.

© 2024 VISHAY INTERTECHNOLOGY, INC. ALL RIGHTS RESERVED

THIS DOCUMENT IS SUBJECT TO CHANGE WITHOUT NOTICE. THE PRODUCTS DESCRIBED HEREIN AND THIS DOCUMENT ARE SUBJECT TO SPECIFIC DISCLAIMERS, SET FORTH AT www.vishay.com/doc?91000