Optocoupler, Power Phototriac



23171

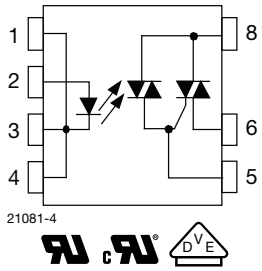

PIN	FUNCTION
1	LED cathode
2	LED anode
3	LED cathode
4	LED cathode
5	Triac gate
6	Triac T1
8	Triac T2

LINKS TO ADDITIONAL RESOURCES

Product Page | Design Tools | SPICE Models

DESCRIPTION

The VO2223 is an optically couple phototriac driving a power triac in a DIP-8 package. It provides a 5300 V of input to output isolation.

FEATURES

- Maximum trigger current (I_{FT}): 10 mA
- Isolation test voltage 5300 V_{RMS}
- Peak off-state voltage 600 V
- Load current 0.9 A_{RMS}
- dV/dt of 210 V/µs
- DIP-8 package
- Pure tin leads
- Material categorization: for definitions of compliance please see www.vishay.com/doc?99912

Pb-free

e3

RoHS COMPLIANT

APPLICATIONS

- Home appliances (air conditioners, microwave ovens, washing machines, personal hygiene systems, refrigerators, fan heaters, inductive heating cooker, water heaters, etc.)
- Industrial equipments

AGENCY APPROVALS

The safety application model number covering all products in this data sheet is VO2223. This model number should be used when consulting safety agency documents.

- UL
- cUL
- DIN EN 60747-5-5 (VDE 0884-5), available with option 1

ORDERING INFORMATION

V	O	2	2	2	3	-	X	0	0	#
PART NUMBER							PACKAGE OPTION			

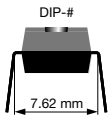

AGENCY CERTIFIED / PACKAGE	TRIGGER, CURRENT I_{FT} (mA)
UL, cUL	**10**
DIP-8	VO2223
UL, cUL, VDE (option 1)	**10**
DIP-8	VO2223-X001

For technical questions, contact: optocoupleranswers@vishay.com

THIS DOCUMENT IS SUBJECT TO CHANGE WITHOUT NOTICE. THE PRODUCTS DESCRIBED HEREIN AND THIS DOCUMENT ARE SUBJECT TO SPECIFIC DISCLAIMERS, SET FORTH AT www.vishay.com/doc?91000

ABSOLUTE MAXIMUM RATINGS (T_{amb} = 25 °C, unless otherwise specified)				
PARAMETER	**TEST CONDITION**	**SYMBOL**	**VALUE**	**UNIT**
INPUT				
LED continuous forward current		I_F	50	mA
LED reverse voltage		V_R	6	V
OUTPUT				
Repetitive peak off-state voltage	Sine wave, 50 Hz to 60 Hz, gate open	V_{DRM}	600	V
On-state RMS current		$I_{T(RMS)}$	0.9	A
Peak non-repetitive surge current (60 Hz, 1 cycle)		I_{TSM}	9	A
COUPLER				
Total power dissipation (2)		P_{diss}	1.2	W
Ambient temperature range		T_{amb}	-40 to +85	°C
Storage temperature range		T_{stg}	-40 to +125	°C
Soldering temperature (1)	t ≤ 10 s max.	T_{sld}	260	°C
Isolation test voltage	For 1 s	V_{ISO}	5300	V_{RMS}

Notes

- Stresses in excess of the absolute maximum ratings can cause permanent damage to the device. Functional operation of the device is not implied at these or any other conditions in excess of those given in the operational sections of this document. Exposure to absolute maximum ratings for extended periods of the time can adversely affect reliability.

(1) Refer to wave profile for soldering conditions for through hole devices

(2) Total power dissipation value is based on 2S2P PCB

ABSOLUTE MAXIMUM RATING CURVES

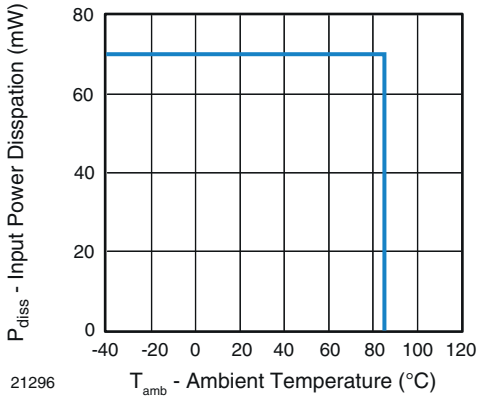

Fig. 1 - Power Dissipation vs. Temperature

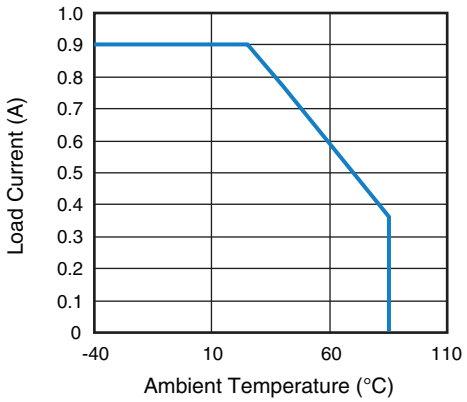

Fig. 2 - Allowable Load Current vs. Ambient Temperature

Note

- The allowable load current was calculated out under a given operating conditions and only for reference:
  LED power: Q_E = 0.015 W, θ_{BA} (4-layer) = 35 °C/W

For technical questions, contact: optocoupleranswers@vishay.com
THIS DOCUMENT IS SUBJECT TO CHANGE WITHOUT NOTICE. THE PRODUCTS DESCRIBED HEREIN AND THIS DOCUMENT ARE SUBJECT TO SPECIFIC DISCLAIMERS, SET FORTH AT www.vishay.com/doc?91000

ELECTRICAL CHARACTERISTICS (T_{amb} = 25 °C, unless otherwise specified)						
PARAMETER	**TEST CONDITION**	**SYMBOL**	**MIN.**	**TYP.**	**MAX.**	**UNIT**
INPUT						
LED trigger current	V_T = 6 V	I_{FT}	2.5	-	10	mA
LED reverse current	V_R = 5 V	I_R	-	-	10	µA
LED forward voltage	I_F = 10 mA	V_F	0.9	-	1.3	V
OUTPUT						
Peak on-state voltage	I_F = 10 mA, I_{TM} = max.	V_{TM}	-	-	2.5	V
Peak off-state current	I_F = 10 mA, V_{DRM} = 600 V	I_{DRM}	-	-	100	µA
Holding current	R_L = 100 Ω	I_H	-	-	25	mA
Critical rate of rise of off-state voltage	V_{IN} = 400 V_{RMS} (Fig. 3)	dV/dt_{cr}	-	210	-	V/µs
Critical rate of rise of commutating voltage	V_{IN} = 240 V_{RMS}, I_T = 1 A_{RMS} (Fig. 3)	dV/dt_{crq}	-	0.7	-	V/µs

Note

- Minimum and maximum values are testing requirements. Typical values are characteristics of the device and are the result of engineering evaluations. Typical values are for information only and are not part of the testing requirements.

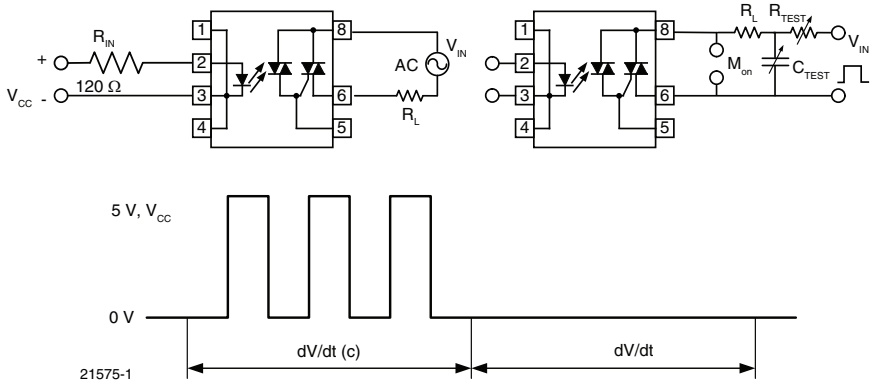

Fig. 3 - dV/dt Test Circuit

SAFETY AND INSULATION RATINGS							
PARAMETER		**TEST CONDITION**	**SYMBOL**	**MIN.**	**TYP.**	**MAX.**	**UNIT**
Climatic classification		IEC 68 part 1		-	40 / 85 / 21	-	
Pollution degree		DIN VDE0109		-	2	-	
Tracking resistance (comparative tracking index)		Insulation group IIIa	CTI	175	-	-	
Highest allowable overvoltage		Transient overvoltage	V_{IOTM}	8000	-	-	V_{peak}
Maximum working insulation voltage		Recurring peak voltage	V_{IORM}	890	-	-	V_{peak}
Insulation resistance at 25 °C		V_{IO} = 500 V	R_{IS}	-	-	≥ 10^{12}	Ω
Insulation resistance at T_S		V_{IO} = 500 V	R_{IS}	-	-	≥ 10^9	Ω
Insulation resistance at 100 °C		V_{IO} = 500 V	R_{IS}	-	-	≥ 10^{11}	Ω
Partial discharge test voltage		Method b, V_{pd} = V_{IORM} x 1.6	V_{pd}	-	-	1424	V_{peak}
Safety limiting values - maximum values allowed in the event of a failure	Case temperature		T_{SI}	-	-	165	°C
	Input current		I_{SI}	-	-	150	mA
	Output power		P_{SO}	-	-	2000	mW
Minimum external air gap (clearance distance)		Measured from input terminals to output terminals, shortest distance through air		≥ 7	-	-	mm
Minimum external tracking (creepage distance)		Measured from input terminals to output terminals, shortest distance path along body		≥ 7	-	-	mm

Note

- This phototriac coupler is suitable for “Safe Electrical Insulation” only within the safety ratings. Compliance with safety ratings shall be ensured by means of protective circuits.

For technical questions, contact: optocoupleranswers@vishay.com
THIS DOCUMENT IS SUBJECT TO CHANGE WITHOUT NOTICE. THE PRODUCTS DESCRIBED HEREIN AND THIS DOCUMENT ARE SUBJECT TO SPECIFIC DISCLAIMERS, SET FORTH AT www.vishay.com/doc?91000

TYPICAL CHARACTERISTICS (T_{amb} = 25 °C, unless otherwise specified)

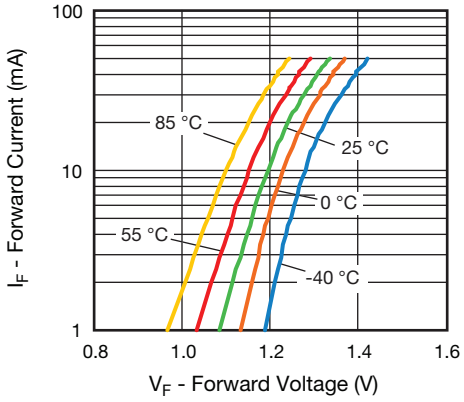

Fig. 4 - Forward Current vs. Forward Voltage

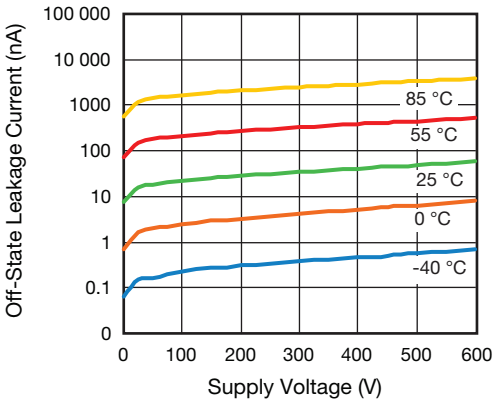

Fig. 7 - Off-State Leakage Current vs. Voltage

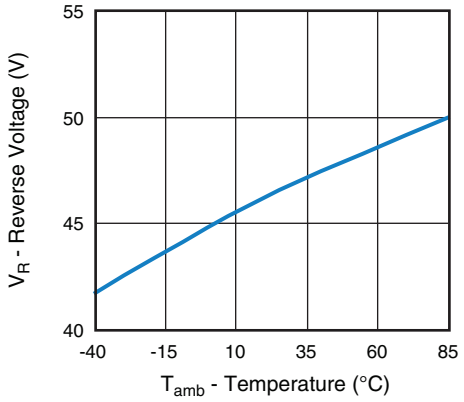

Fig. 5 - Reverse Voltage vs. Temperature

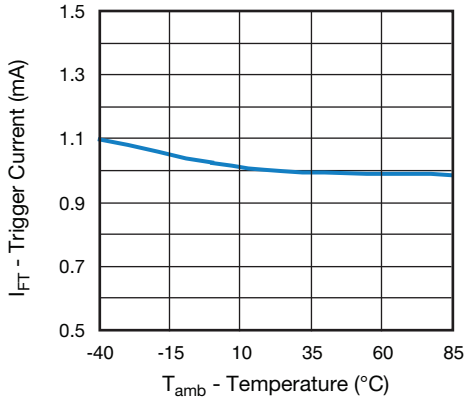

Fig. 8 - Normalized Trigger Input Current vs. Temperature

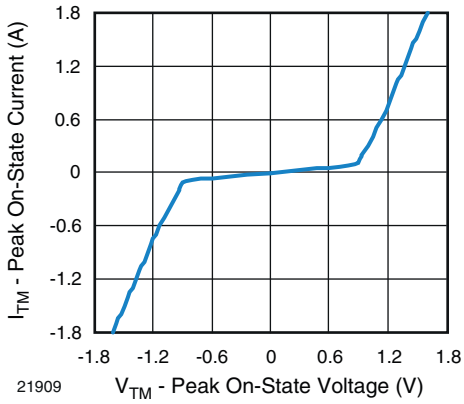

Fig. 6 - On-State Current vs. On-State Voltage

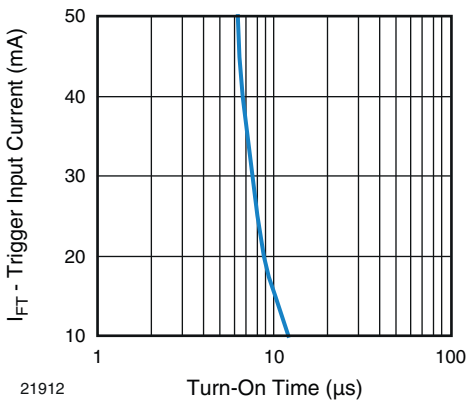

Fig. 9 - Trigger Input Current vs. Turn-On Time

For technical questions, contact: optocoupleranswers@vishay.com
THIS DOCUMENT IS SUBJECT TO CHANGE WITHOUT NOTICE. THE PRODUCTS DESCRIBED HEREIN AND THIS DOCUMENT ARE SUBJECT TO SPECIFIC DISCLAIMERS, SET FORTH AT www.vishay.com/doc?91000

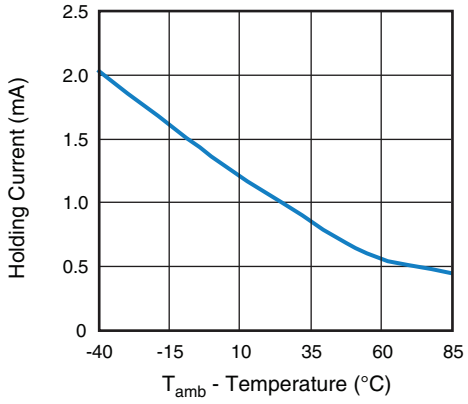

Fig. 10 - Normalized Holding Current vs. Temperature

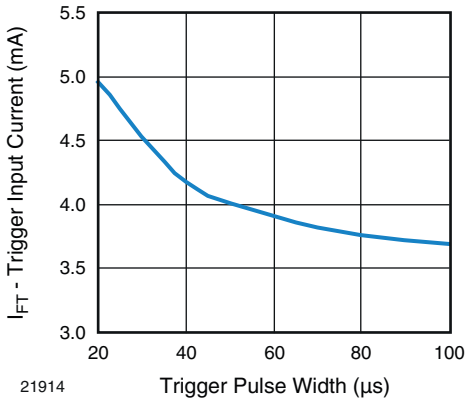

Fig. 11 - Trigger Current vs. Trigger Pulse Width

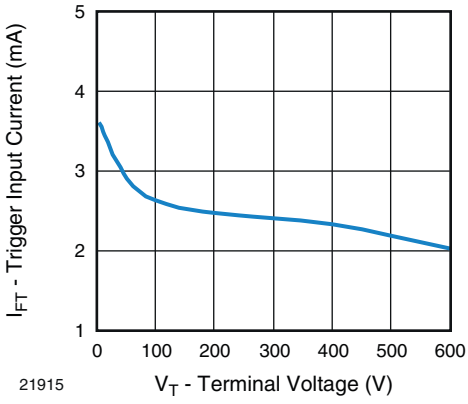

Fig. 12 - Trigger Current vs. V_{LOAD}

For technical questions, contact: optocoupleranswers@vishay.com
THIS DOCUMENT IS SUBJECT TO CHANGE WITHOUT NOTICE. THE PRODUCTS DESCRIBED HEREIN AND THIS DOCUMENT ARE SUBJECT TO SPECIFIC DISCLAIMERS, SET FORTH AT www.vishay.com/doc?91000

PACKAGE DIMENSIONS in millimeters

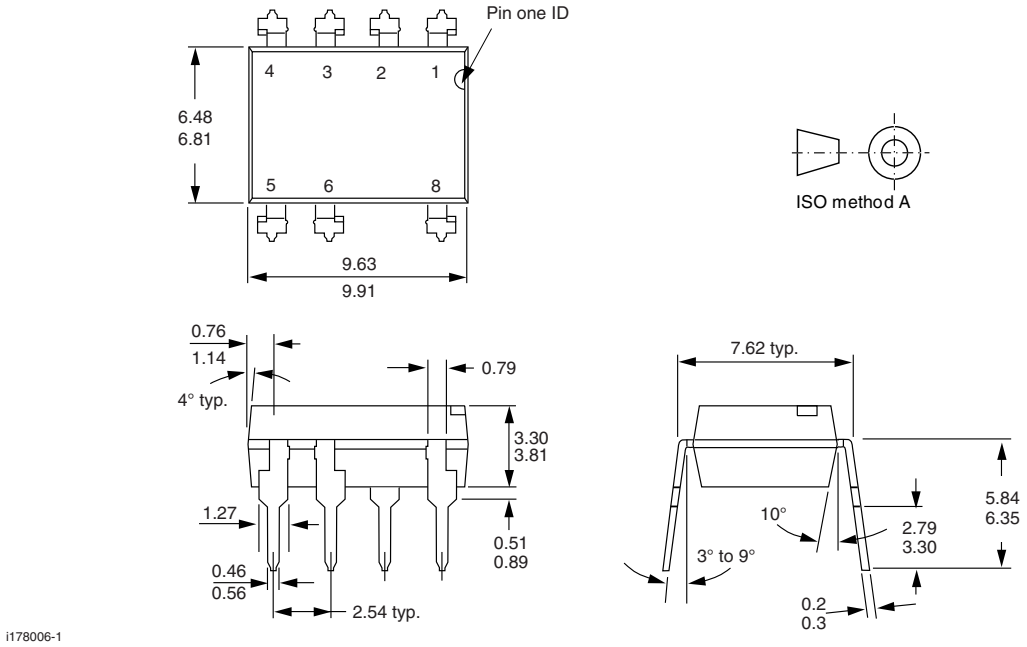

PACKAGE MARKING (Example of VO2223-X001)

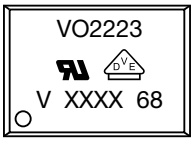

Note

- XXXX = LMC (lot marking code)

For technical questions, contact: optocoupleranswers@vishay.com
THIS DOCUMENT IS SUBJECT TO CHANGE WITHOUT NOTICE. THE PRODUCTS DESCRIBED HEREIN AND THIS DOCUMENT ARE SUBJECT TO SPECIFIC DISCLAIMERS, SET FORTH AT www.vishay.com/doc?91000

PACKING INFORMATION

DEVICE PER TUBE			
TYPE	UNITS/TUBE	TUBES/BOX	UNITS/BOX
DIP-8	50	40	2000

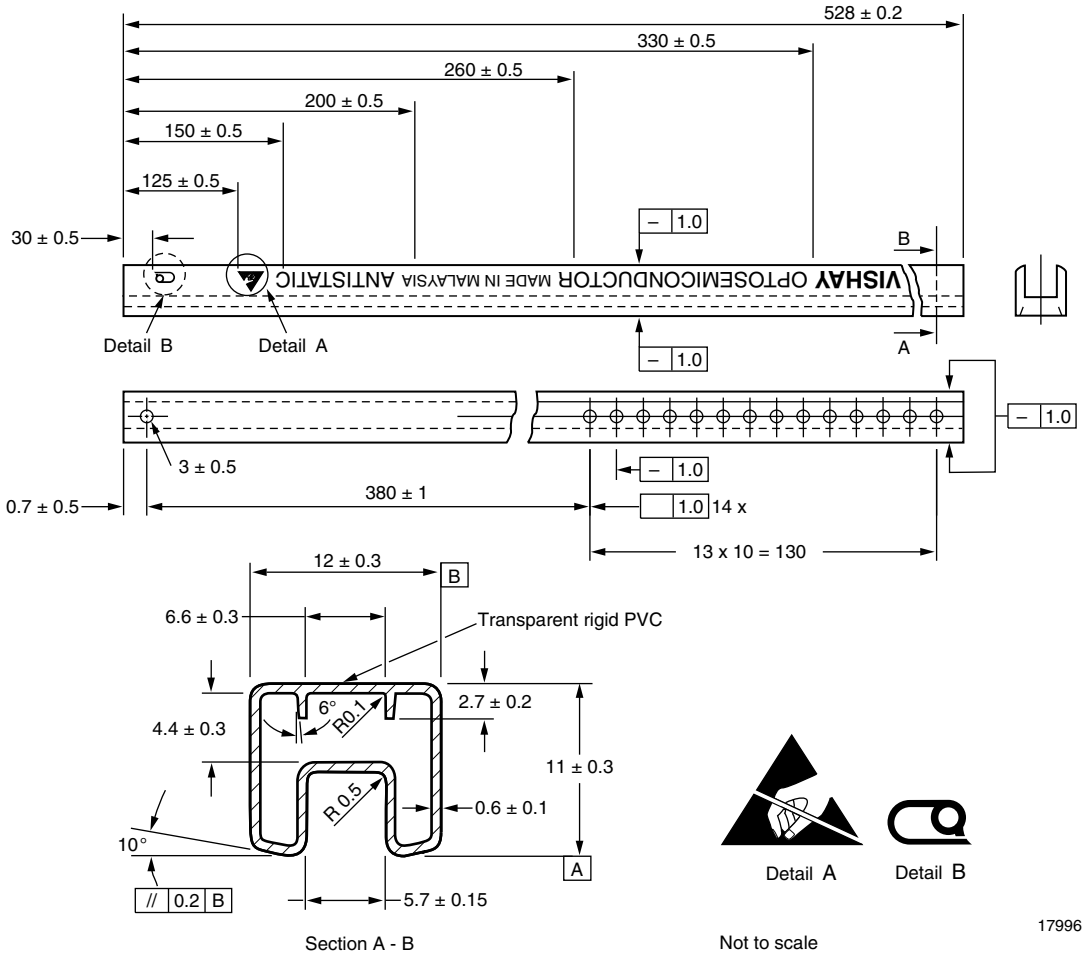

Fig. 13 - Shipping Tube Specifications for DIP Packages

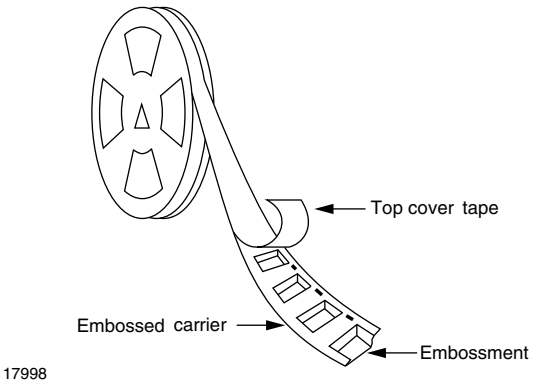

Fig. 14 - Tape and Reel Shipping Medium

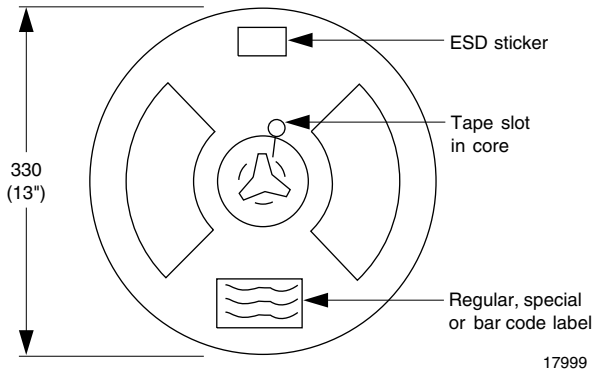

Fig. 15 - Tape and Reel Shipping Medium

For technical questions, contact: optocoupleranswers@vishay.com
THIS DOCUMENT IS SUBJECT TO CHANGE WITHOUT NOTICE. THE PRODUCTS DESCRIBED HEREIN AND THIS DOCUMENT ARE SUBJECT TO SPECIFIC DISCLAIMERS, SET FORTH AT www.vishay.com/doc?91000

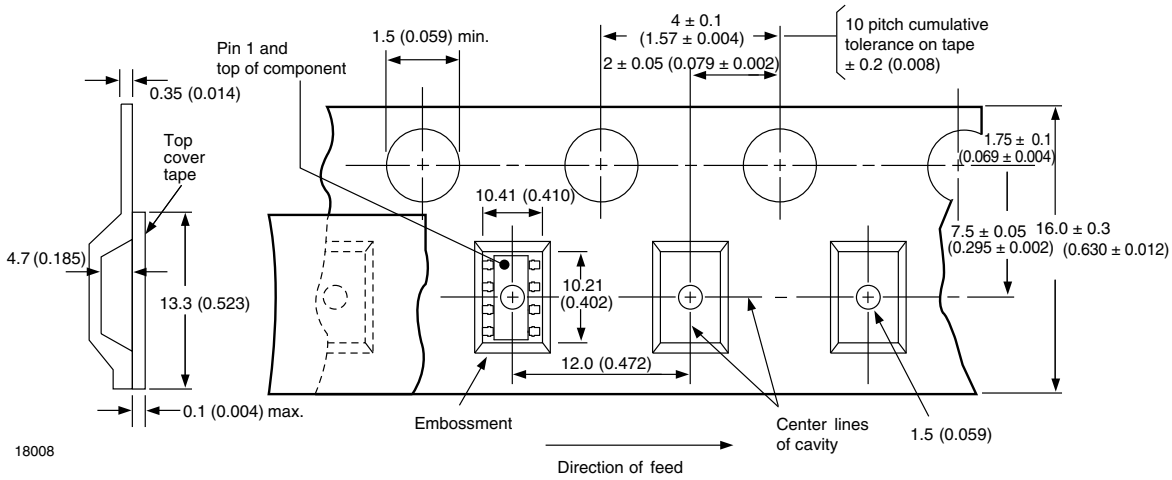

Fig. 16 - Tape and Packing (1000 pieces on reel)

SOLDER PROFILES

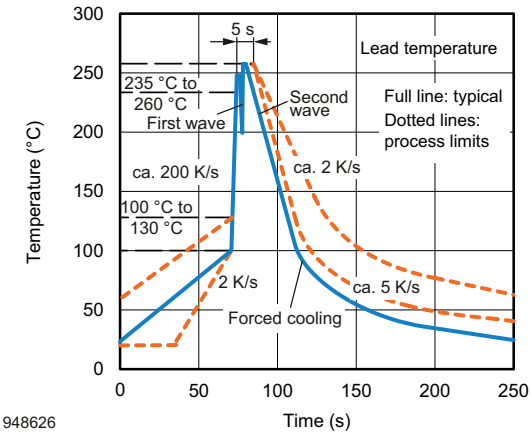

Fig. 17 - Recommended Wave Soldering Double Wave Profile for DIP Devices

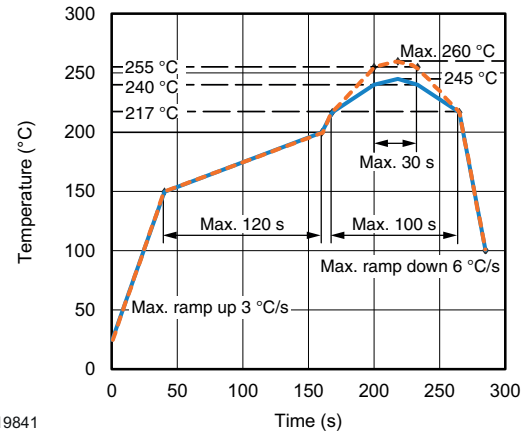

Fig. 18 - Recommended Lead (Pb)-free Reflow Solder Profile for SMD Devices

HANDLING AND STORAGE CONDITIONS

ESD level: HBM class 2

Floor life: unlimited

Conditions: T_{amb} < 30 °C, RH < 85 %

Moisture sensitivity level 1, according to J-STD-020

For technical questions, contact: optocoupleranswers@vishay.com
THIS DOCUMENT IS SUBJECT TO CHANGE WITHOUT NOTICE. THE PRODUCTS DESCRIBED HEREIN AND THIS DOCUMENT ARE SUBJECT TO SPECIFIC DISCLAIMERS, SET FORTH AT www.vishay.com/doc?91000

Disclaimer

ALL PRODUCT, PRODUCT SPECIFICATIONS AND DATA ARE SUBJECT TO CHANGE WITHOUT NOTICE TO IMPROVE RELIABILITY, FUNCTION OR DESIGN OR OTHERWISE.

Vishay Intertechnology, Inc., its affiliates, agents, and employees, and all persons acting on its or their behalf (collectively, “Vishay”), disclaim any and all liability for any errors, inaccuracies or incompleteness contained in any datasheet or in any other disclosure relating to any product.

Vishay makes no warranty, representation or guarantee regarding the suitability of the products for any particular purpose or the continuing production of any product. To the maximum extent permitted by applicable law, Vishay disclaims (i) any and all liability arising out of the application or use of any product, (ii) any and all liability, including without limitation special, consequential or incidental damages, and (iii) any and all implied warranties, including warranties of fitness for particular purpose, non-infringement and merchantability.

Statements regarding the suitability of products for certain types of applications are based on Vishay's knowledge of typical requirements that are often placed on Vishay products in generic applications. Such statements are not binding statements about the suitability of products for a particular application. It is the customer's responsibility to validate that a particular product with the properties described in the product specification is suitable for use in a particular application. Parameters provided in datasheets and / or specifications may vary in different applications and performance may vary over time. All operating parameters, including typical parameters, must be validated for each customer application by the customer's technical experts. Product specifications do not expand or otherwise modify Vishay's terms and conditions of purchase, including but not limited to the warranty expressed therein.

Hyperlinks included in this datasheet may direct users to third-party websites. These links are provided as a convenience and for informational purposes only. Inclusion of these hyperlinks does not constitute an endorsement or an approval by Vishay of any of the products, services or opinions of the corporation, organization or individual associated with the third-party website. Vishay disclaims any and all liability and bears no responsibility for the accuracy, legality or content of the third-party website or for that of subsequent links.

Vishay products are not designed for use in life-saving or life-sustaining applications or any application in which the failure of the Vishay product could result in personal injury or death unless specifically qualified in writing by Vishay. Customers using or selling Vishay products not expressly indicated for use in such applications do so at their own risk. Please contact authorized Vishay personnel to obtain written terms and conditions regarding products designed for such applications.

No license, express or implied, by estoppel or otherwise, to any intellectual property rights is granted by this document or by any conduct of Vishay. Product names and markings noted herein may be trademarks of their respective owners.

© 2024 VISHAY INTERTECHNOLOGY, INC. ALL RIGHTS RESERVED

THIS DOCUMENT IS SUBJECT TO CHANGE WITHOUT NOTICE. THE PRODUCTS DESCRIBED HEREIN AND THIS DOCUMENT ARE SUBJECT TO SPECIFIC DISCLAIMERS, SET FORTH AT www.vishay.com/doc?91000