Optocoupler, Phototriac Output, Zero Crossing, 1.5 kV/µs dV/dt, 600 V

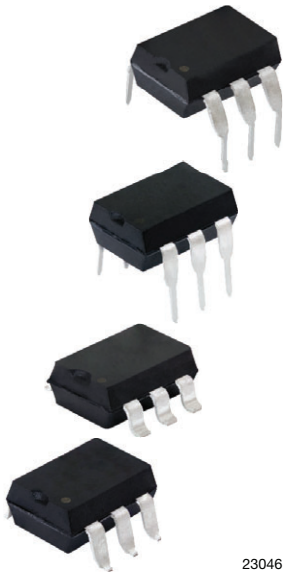

23046

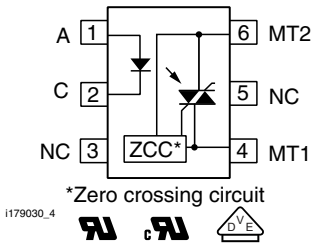

FEATURES

- 1500 V/µs dV/dt minimum
- 600 V blocking voltage
- 100 mA on-state current
- Zero crossing detector
- Low input trigger current
- 6 pin DIP package
- Material categorization: for definitions of compliance please see www.vishay.com/doc?99912

Pb-free

e3

RoHS COMPLIANT

APPLICATIONS

- Household appliances
- Triac drive / AC motor drives
- Solenoid / valve controls
- Office automation equipment / machine
- Temperature (HVAC) / lighting controls
- Switching power supply

AGENCY APPROVALS

- UL
- cUL
- DIN EN 60747-5-5 (VDE 0884-5) available with option 1

LINKS TO ADDITIONAL RESOURCES

3D Models | Design Tools | Related Documents | SPICE Models | Footprints | Schematics

DESCRIPTION

The VO3062 and VO3063 triac driver family consists of a GaAs infrared LED optically coupled to a monolithic photosensitive zero crossing triac detector chip.

The 600 V blocking voltage permits control of off-line voltages up to 240 V_{AC}, with a safety factor of more than two, and is sufficient for as much as 380 V.

ORDERING INFORMATION

V	O	3	0	6	#	-	X	0	#	#	T
PART NUMBER							PACKAGE OPTION				TAPE AND REEL

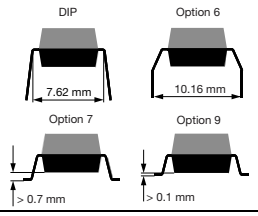

AGENCY CERTIFIED / PACKAGE	TRIGGER, CURRENT I_{FT} (mA)	
UL, cUL	**5**	**10**
DIP-6	VO3063	VO3062
DIP-6, 400 mil, option 6	VO3063-X006	-
SMD-6, option 7	VO3063-X007T	VO3062-X007T
SMD-6, option 9	VO3063-X009T	-
VDE, UL, cUL	**5**	**10**
DIP-6, 400 mil, option 6	VO3063-X016	VO3062-X016
SMD-6, option 7	VO3063-X017T	VO3062-X017T

For technical questions, contact: optocoupleranswers@vishay.com

THIS DOCUMENT IS SUBJECT TO CHANGE WITHOUT NOTICE. THE PRODUCTS DESCRIBED HEREIN AND THIS DOCUMENT ARE SUBJECT TO SPECIFIC DISCLAIMERS, SET FORTH AT www.vishay.com/doc?91000

ABSOLUTE MAXIMUM RATINGS (T_{amb} = 25 °C, unless otherwise specified)					
PARAMETER	**TEST CONDITION**	**PART**	**SYMBOL**	**VALUE**	**UNIT**
INPUT					
Reverse voltage			V_R	6	V
Forward current - continuous			I_F	60	mA
Power dissipation			P_{diss}	100	mW
OUTPUT					
Off state output terminal voltage		VO3062, VO3063	V_{DRM}	600	V
Peak non-repetitive surge current	PW = 100 µs, 120 pps		I_{TSM}	1	A
Power dissipation			P_{diss}	200	mW
On-state RMS current			$I_{T(RMS)}$	100	mA
COUPLER					
Total power dissipation			P_{tot}	300	mW
Operating temperature range			T_{amb}	-55 to +100	°C
Storage temperature range			T_{stg}	-55 to +150	°C
Soldering temperature	Maximum ≤ 10 s		T_{sld}	260	°C

Note

- Stresses in excess of the absolute maximum ratings can cause permanent damage to the device. Functional operation of the device is not implied at these or any other conditions in excess of those given in the operational sections of this document. Exposure to absolute maximum ratings for extended periods of the time can adversely affect reliability

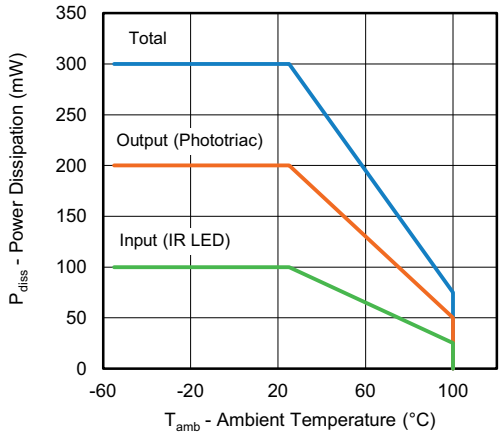

Fig. 1 - Power Dissipation vs. Ambient Temperature

For technical questions, contact: optocoupleranswers@vishay.com
THIS DOCUMENT IS SUBJECT TO CHANGE WITHOUT NOTICE. THE PRODUCTS DESCRIBED HEREIN AND THIS DOCUMENT ARE SUBJECT TO SPECIFIC DISCLAIMERS, SET FORTH AT www.vishay.com/doc?91000

ELECTRICAL CHARACTERISTICS (T_{amb} = 25 °C, unless otherwise specified)							
PARAMETER	**TEST CONDITION**	**PART**	**SYMBOL**	**MIN.**	**TYP.**	**MAX.**	**UNIT**
INPUT							
Reverse current	V_R = 6 V		I_R	-	-	10	µA
Forward voltage	I_F = 30 mA		V_F	-	1.3	1.5	V
OUTPUT							
Leakage with LED off, either direction	V_{DRM} = 600 V		I_{DRM}	-	5	500	nA
Critical rate of rise off-state voltage	V_D = 400 V		dV/dt	1500	2000	-	V/µs
COUPLER							
LED trigger current, current required to latch output		VO3063	I_{FT}	-	-	5	mA
		VO3062	I_{FT}	-	-	10	mA
Peak on-state voltage, either direction	I_{TM} = 100 mA Peak, I_F = rated I_{FT}		V_{TM}	-	1.7	3	V
Holding current, either direction			I_H	-	250	-	µA
Inhibit voltage (MT1-MT2 voltage above which device will not trigger)			V_{INH}	-	12	22	V
Leakage in inhibited state	I_F = 10 mA maximum, at rated V_{DRM}, off state		V_{DRM2}	-	250	1000	µA

Note

- Typical values are characteristics of the device and are the result of engineering evaluations. Typical values are for information only and are not part of the testing requirements

SAFETY AND INSULATION RATINGS				
PARAMETER	**TEST CONDITION**	**SYMBOL**	**VALUE**	**UNIT**
Climatic classification	According to IEC 68 part 1		55 / 100 / 21	
Pollution degree	According to DIN VDE 0109		2	
Comparative tracking index	Insulation group IIIa	CTI	175	
Maximum rated withstanding isolation voltage	According to UL1577, t = 1 min	V_{ISO}	4420	V_{RMS}
Tested withstanding isolation voltage	According to UL1577, t = 1 s	V_{ISO}	5300	V_{RMS}
Maximum transient isolation voltage	According to DIN EN 60747-5-5	V_{IOTM}	8000	V_{peak}
Maximum repetitive peak isolation voltage	According to DIN EN 60747-5-5	V_{IORM}	890	V_{peak}
Isolation resistance	T_{amb} = 25 °C, V_{IO} = 500 V	R_{IO}	≥ 10^{12}	Ω
	T_{amb} = 100 °C, V_{IO} = 500 V	R_{IO}	≥ 10^{11}	Ω
Output safety power		P_{SO}	500	mW
Input safety current		I_{SI}	250	mA
Input safety temperature		T_S	175	°C
Creepage distance	DIP-6		≥ 7	mm
Clearance distance			≥ 7	mm
Creepage distance	DIP-6, 400 mil, option 6		≥ 8	mm
Clearance distance			≥ 8	mm
Creepage distance	SMD-6, option 7		≥ 7	mm
Clearance distance			≥ 7	mm
Creepage distance	SMD-6, option 9		≥ 8	mm
Clearance distance			≥ 8	mm
Insulation thickness		DTI	≥ 0.4	mm

Note

- As per IEC 60747-5-5, § 7.4.3.8.2, this optocoupler is suitable for “safe electrical insulation” only within the safety ratings. Compliance with the safety ratings shall be ensured by means of protective circuits

For technical questions, contact: optocoupleranswers@vishay.com
THIS DOCUMENT IS SUBJECT TO CHANGE WITHOUT NOTICE. THE PRODUCTS DESCRIBED HEREIN AND THIS DOCUMENT ARE SUBJECT TO SPECIFIC DISCLAIMERS, SET FORTH AT www.vishay.com/doc?91000

TYPICAL CHARACTERISTICS (T_{amb} = 25 °C, unless otherwise specified)

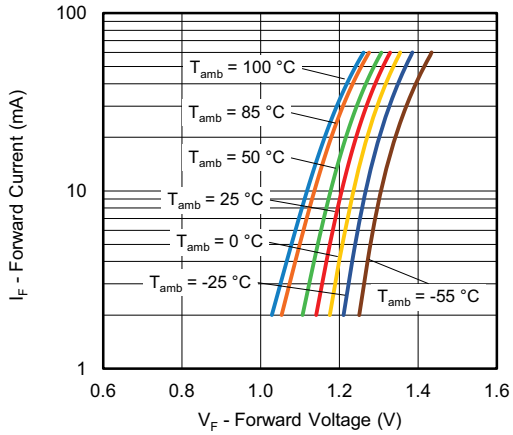

Fig. 2 - Forward Current vs. Forward Voltage

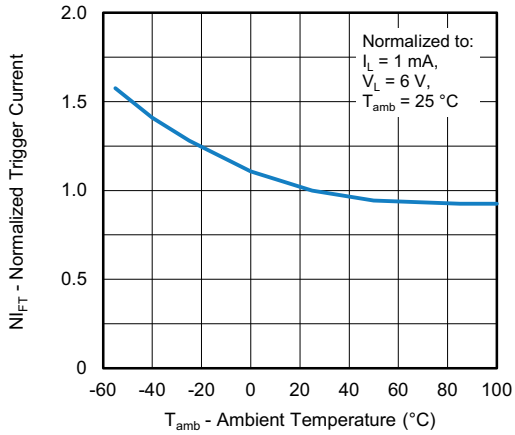

Fig. 3 - Normalized Trigger Current vs. Ambient Temperature

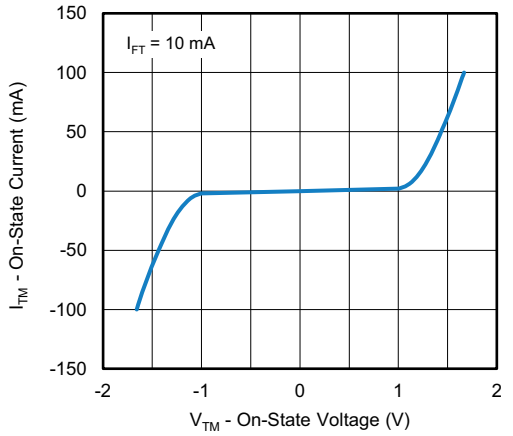

Fig. 4 - On-State Current vs. On-State Voltage

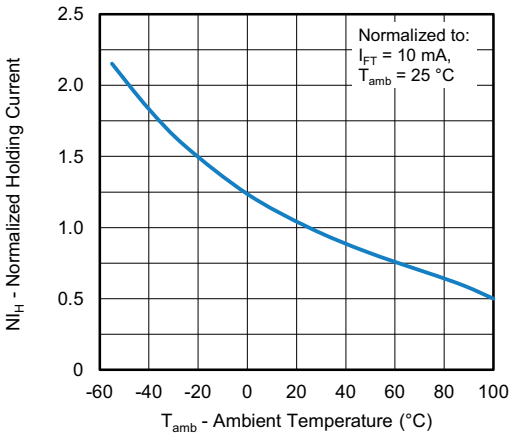

Fig. 5 - Normalized Holding Current vs. Ambient Temperature

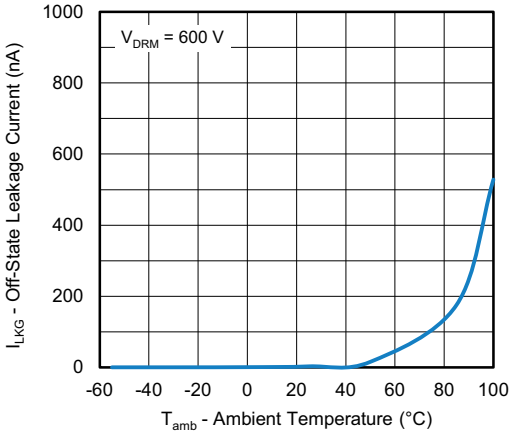

Fig. 6 - Off-State Leakage Current vs. Ambient Temperature

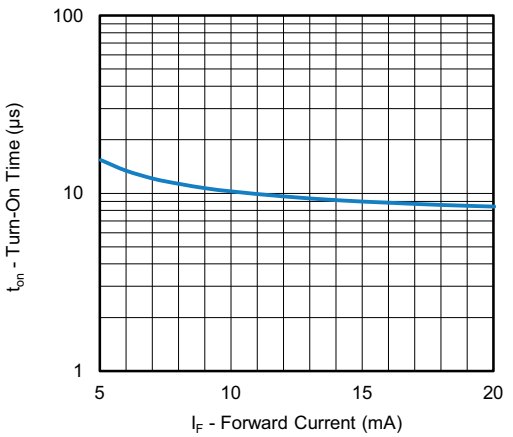

Fig. 7 - Turn-On Time vs. Forward Current

For technical questions, contact: optocoupleranswers@vishay.com
THIS DOCUMENT IS SUBJECT TO CHANGE WITHOUT NOTICE. THE PRODUCTS DESCRIBED HEREIN AND THIS DOCUMENT ARE SUBJECT TO SPECIFIC DISCLAIMERS, SET FORTH AT www.vishay.com/doc?91000

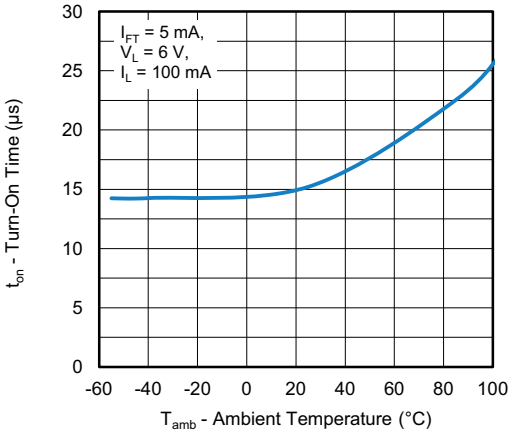

Fig. 8 - Turn-on Time vs. Ambient Temperature

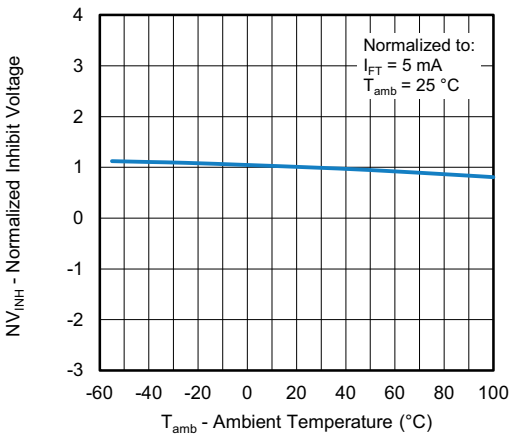

Fig. 9 - Normalized Inhibit Voltage vs. Ambient Temperature

PACKAGE DIMENSIONS (in millimeters)

DIP-6

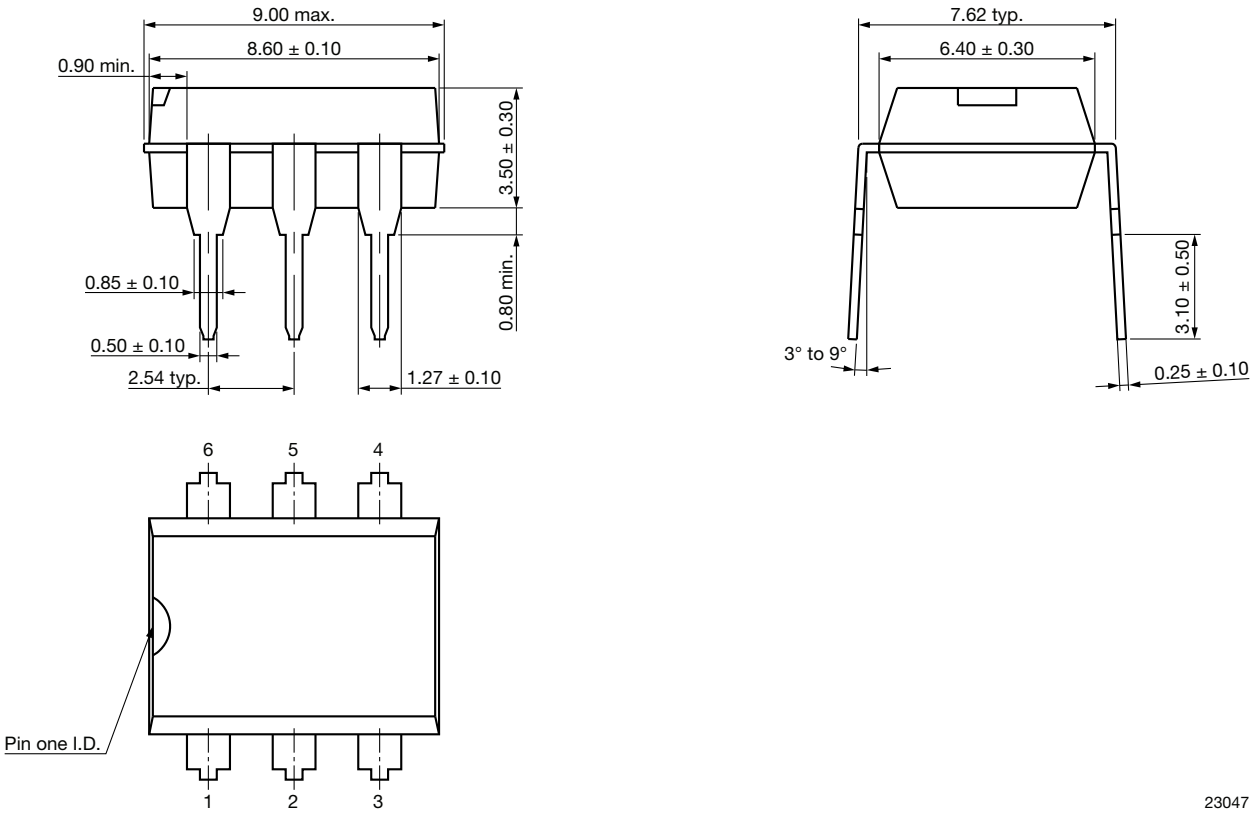

For technical questions, contact: optocoupleranswers@vishay.com
THIS DOCUMENT IS SUBJECT TO CHANGE WITHOUT NOTICE. THE PRODUCTS DESCRIBED HEREIN AND THIS DOCUMENT ARE SUBJECT TO SPECIFIC DISCLAIMERS, SET FORTH AT www.vishay.com/doc?91000

DIP-6, 400 mil, Option 6

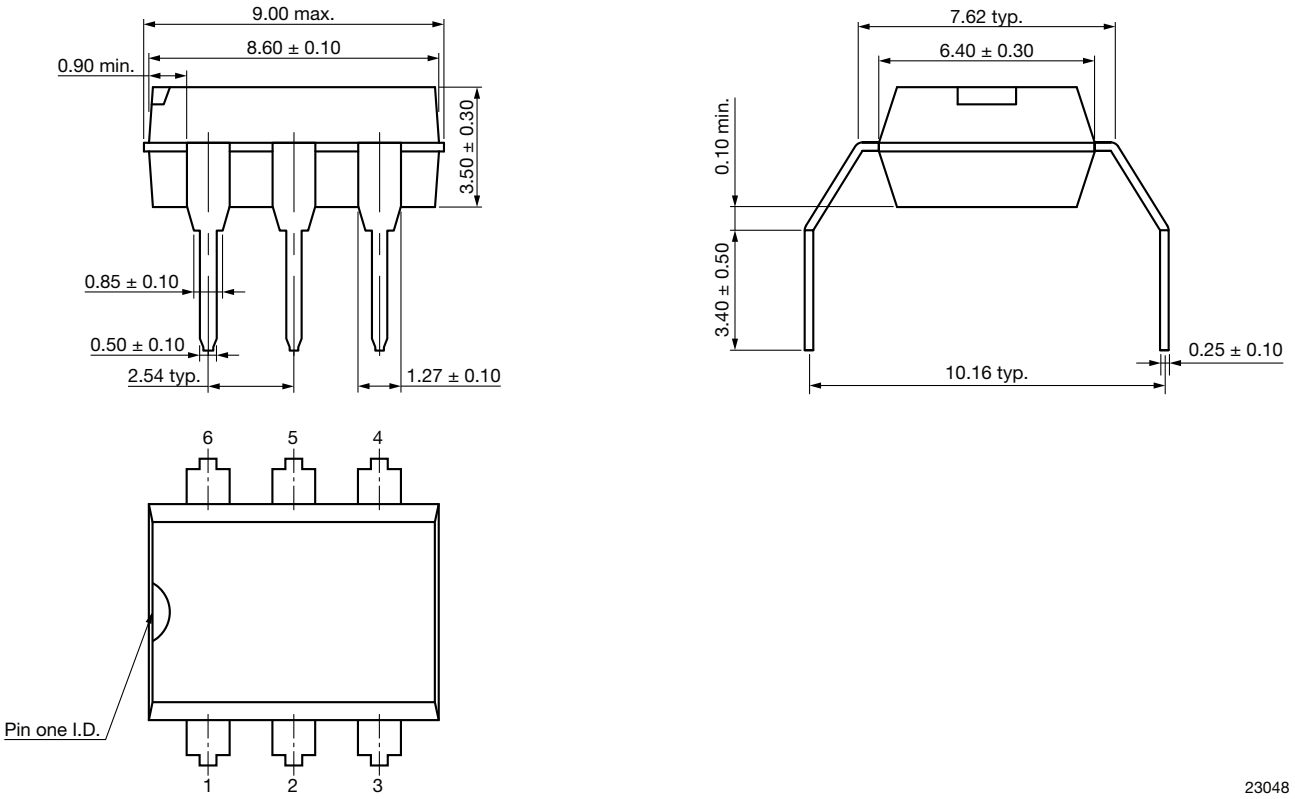

SMD-6, Option 7

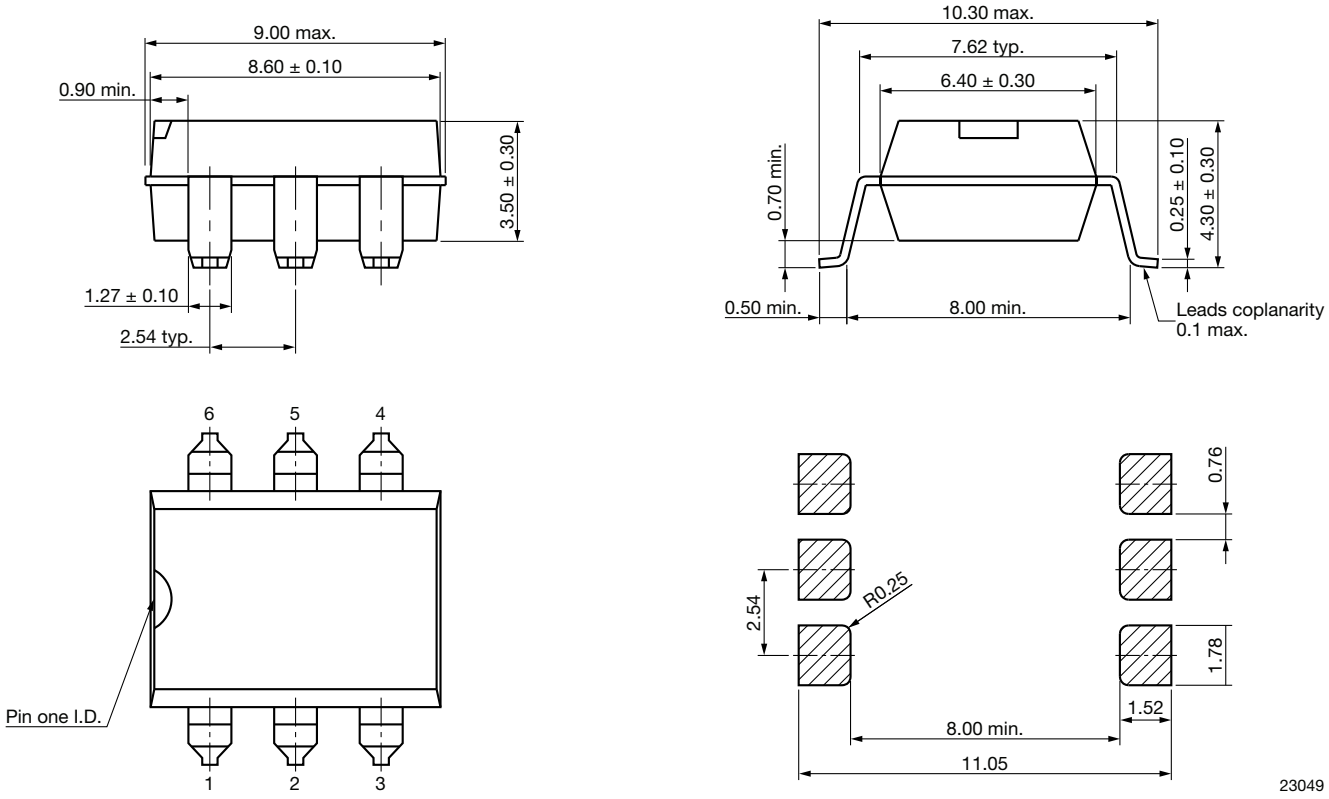

For technical questions, contact: optocoupleranswers@vishay.com

THIS DOCUMENT IS SUBJECT TO CHANGE WITHOUT NOTICE. THE PRODUCTS DESCRIBED HEREIN AND THIS DOCUMENT ARE SUBJECT TO SPECIFIC DISCLAIMERS, SET FORTH AT www.vishay.com/doc?91000

SMD-6, Option 9

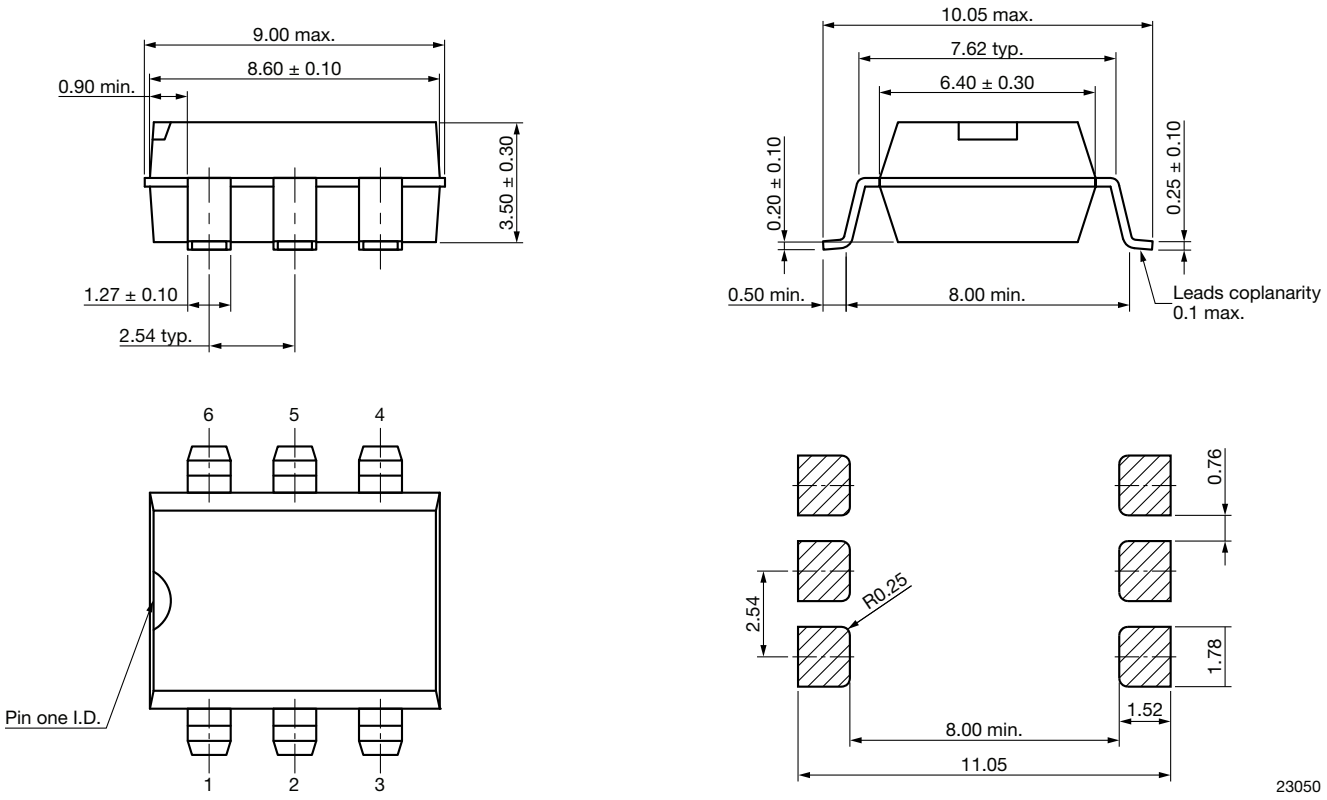

PACKAGE MARKING

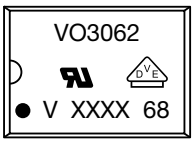

Fig. 10 - Example of VO3062-X016

Notes

- XXXX = LMC (lot marking code)
- The VDE logo is only marked on option1 parts
- Tape and reel suffix (T) is not part of the package marking

For technical questions, contact: optocoupleranswers@vishay.com
THIS DOCUMENT IS SUBJECT TO CHANGE WITHOUT NOTICE. THE PRODUCTS DESCRIBED HEREIN AND THIS DOCUMENT ARE SUBJECT TO SPECIFIC DISCLAIMERS, SET FORTH AT www.vishay.com/doc?91000

PACKING INFORMATION (in millimeters)

Tube

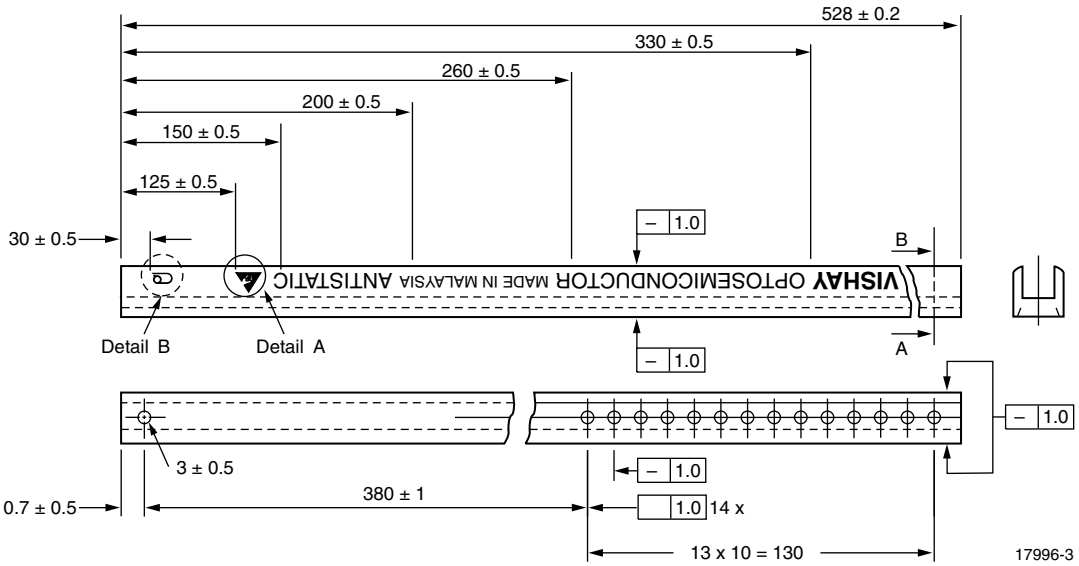

Fig. 11 - Shipping Tube Specifications for DIP Packages

DEVICES PER TUBS			
TYPE	**UNITS/TUBE**	**TUBES/BOX**	**UNITS/BOX**
DIP-6	50	40	2000

DIP-6

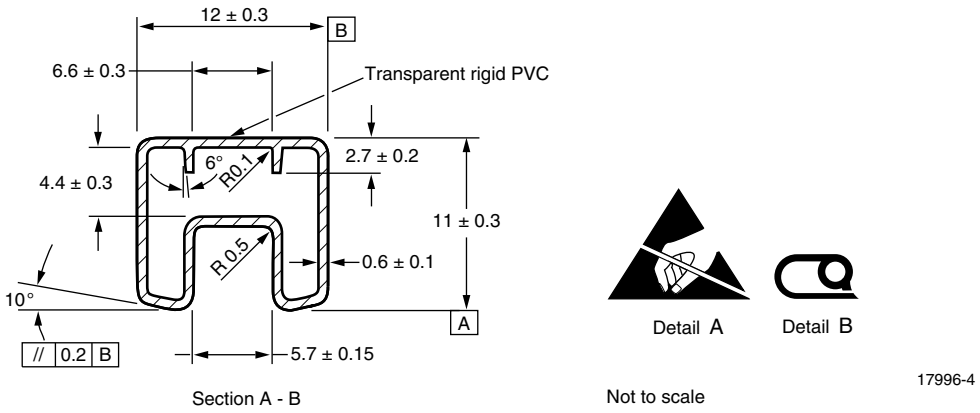

Fig. 12 - Tube Shipping Medium

For technical questions, contact: optocoupleranswers@vishay.com
THIS DOCUMENT IS SUBJECT TO CHANGE WITHOUT NOTICE. THE PRODUCTS DESCRIBED HEREIN AND THIS DOCUMENT ARE SUBJECT TO SPECIFIC DISCLAIMERS, SET FORTH AT www.vishay.com/doc?91000

DIP-6, 400 mil, option 6

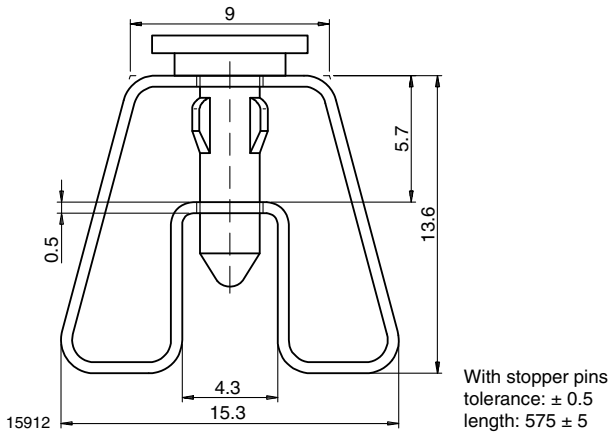

Fig. 13 - Tube Shipping Medium

Tape and Reel

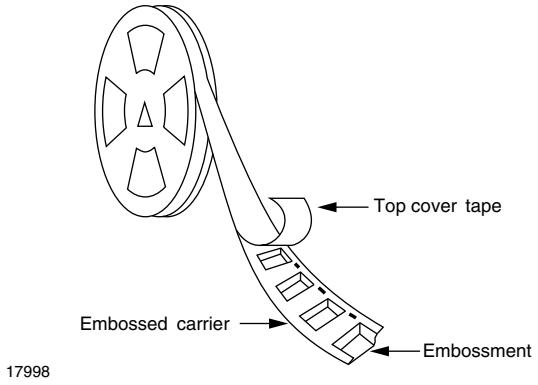

Fig. 14 - Tape and Reel Shipping Medium

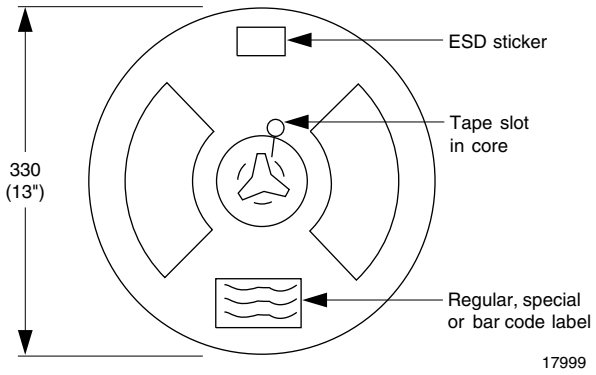

Fig. 15 - Tape and Reel Shipping Medium

SMD-6, option 7

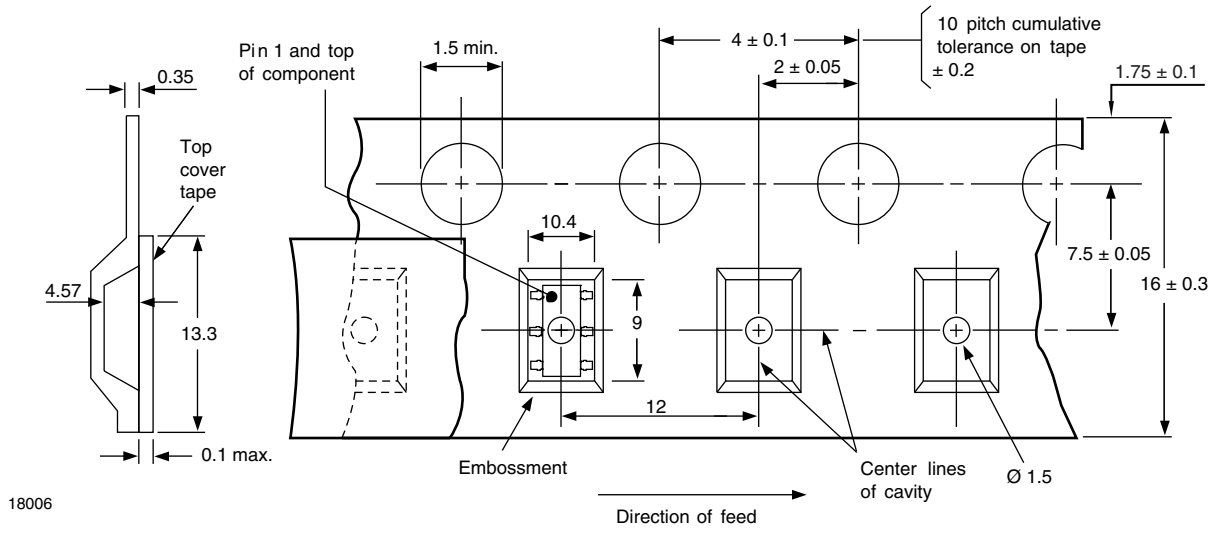

Fig. 16 - Tape and Reel Packing (1000 pieces on Reel)

For technical questions, contact: optocoupleranswers@vishay.com
THIS DOCUMENT IS SUBJECT TO CHANGE WITHOUT NOTICE. THE PRODUCTS DESCRIBED HEREIN AND THIS DOCUMENT ARE SUBJECT TO SPECIFIC DISCLAIMERS, SET FORTH AT www.vishay.com/doc?91000

SMD-6, option 9

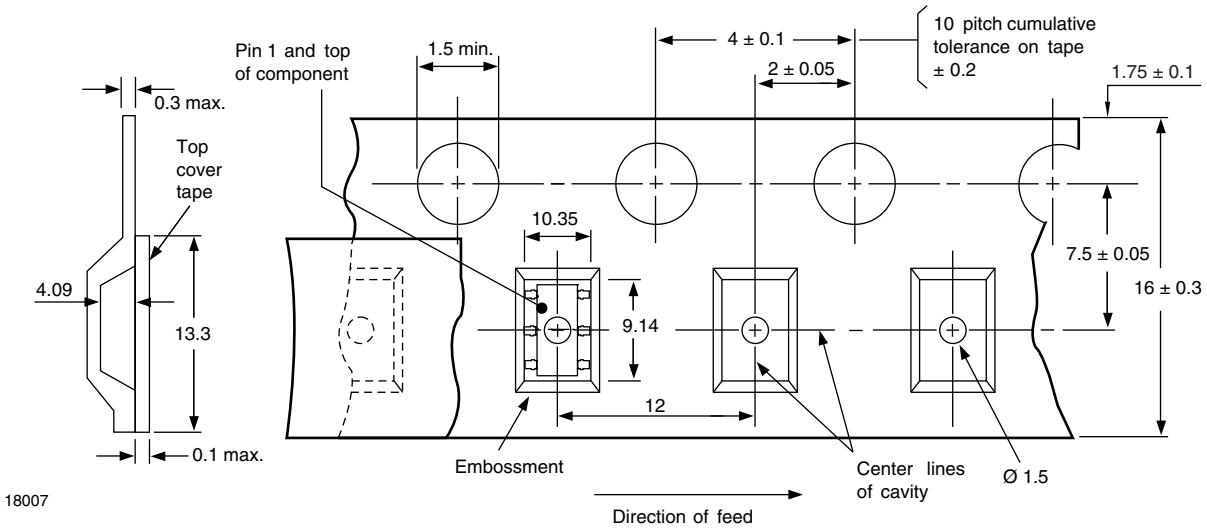

Fig. 17 - Tape and Reel Shipping Medium (1000 pieces on reel)

SOLDER PROFILES

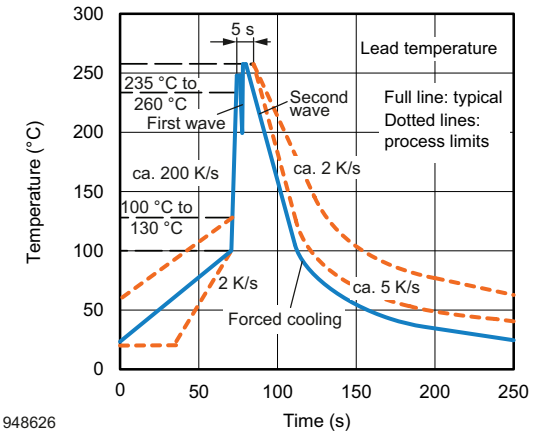

Fig. 18 - Wave Soldering Double Wave Profile According to J-STD-020 for DIP Devices

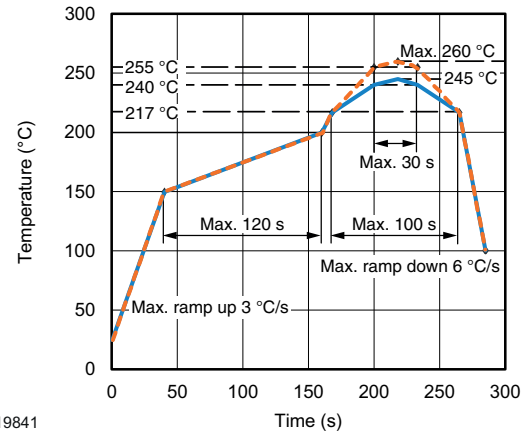

Fig. 19 - Lead (Pb)-free Reflow Solder Profile According to J-STD-020 for SMD Devices

HANDLING AND STORAGE CONDITIONS

ESD level: HBM class 2

Floor life: unlimited

Conditions: T_{amb} < 30 °C, RH < 85 %

Moisture sensitivity level 1, according to J-STD-020

For technical questions, contact: optocoupleranswers@vishay.com
THIS DOCUMENT IS SUBJECT TO CHANGE WITHOUT NOTICE. THE PRODUCTS DESCRIBED HEREIN AND THIS DOCUMENT ARE SUBJECT TO SPECIFIC DISCLAIMERS, SET FORTH AT www.vishay.com/doc?91000

Disclaimer

ALL PRODUCT, PRODUCT SPECIFICATIONS AND DATA ARE SUBJECT TO CHANGE WITHOUT NOTICE TO IMPROVE RELIABILITY, FUNCTION OR DESIGN OR OTHERWISE.

Vishay Intertechnology, Inc., its affiliates, agents, and employees, and all persons acting on its or their behalf (collectively, “Vishay”), disclaim any and all liability for any errors, inaccuracies or incompleteness contained in any datasheet or in any other disclosure relating to any product.

Vishay makes no warranty, representation or guarantee regarding the suitability of the products for any particular purpose or the continuing production of any product. To the maximum extent permitted by applicable law, Vishay disclaims (i) any and all liability arising out of the application or use of any product, (ii) any and all liability, including without limitation special, consequential or incidental damages, and (iii) any and all implied warranties, including warranties of fitness for particular purpose, non-infringement and merchantability.

Statements regarding the suitability of products for certain types of applications are based on Vishay's knowledge of typical requirements that are often placed on Vishay products in generic applications. Such statements are not binding statements about the suitability of products for a particular application. It is the customer's responsibility to validate that a particular product with the properties described in the product specification is suitable for use in a particular application. Parameters provided in datasheets and / or specifications may vary in different applications and performance may vary over time. All operating parameters, including typical parameters, must be validated for each customer application by the customer's technical experts. Product specifications do not expand or otherwise modify Vishay's terms and conditions of purchase, including but not limited to the warranty expressed therein.

Hyperlinks included in this datasheet may direct users to third-party websites. These links are provided as a convenience and for informational purposes only. Inclusion of these hyperlinks does not constitute an endorsement or an approval by Vishay of any of the products, services or opinions of the corporation, organization or individual associated with the third-party website. Vishay disclaims any and all liability and bears no responsibility for the accuracy, legality or content of the third-party website or for that of subsequent links.

Vishay products are not designed for use in life-saving or life-sustaining applications or any application in which the failure of the Vishay product could result in personal injury or death unless specifically qualified in writing by Vishay. Customers using or selling Vishay products not expressly indicated for use in such applications do so at their own risk. Please contact authorized Vishay personnel to obtain written terms and conditions regarding products designed for such applications.

No license, express or implied, by estoppel or otherwise, to any intellectual property rights is granted by this document or by any conduct of Vishay. Product names and markings noted herein may be trademarks of their respective owners.

© 2024 VISHAY INTERTECHNOLOGY, INC. ALL RIGHTS RESERVED

THIS DOCUMENT IS SUBJECT TO CHANGE WITHOUT NOTICE. THE PRODUCTS DESCRIBED HEREIN AND THIS DOCUMENT ARE SUBJECT TO SPECIFIC DISCLAIMERS, SET FORTH AT www.vishay.com/doc?91000