0.5 A Output Current IGBT and MOSFET Driver

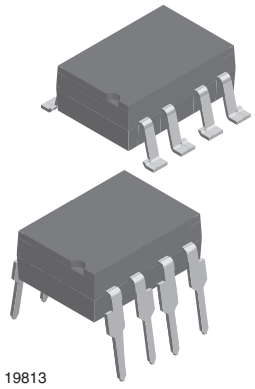

19813

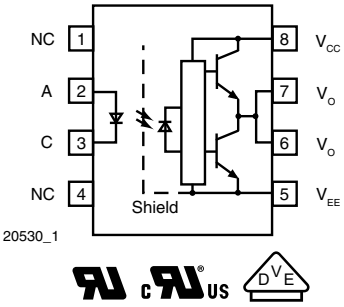

FEATURES

- 0.5 A minimum peak output current
- 25 kV/µs minimum common mode rejection (CMR) at V_{CM} = 1500 V
- I_{CC} = 2.5 mA maximum supply current
- Under voltage lock-out (UVLO) with hysteresis
- Wide operating V_{CC} range: 15 V to 32 V
- 0.4 µs maximum propagation delay
- Industrial temperature range: - 40 °C to 110 °C
- 0.5 V maximum low level output voltage (V_{OL})
- Compliant to RoHS directive 2002/95/EC

Pb-free

e3

RoHS COMPLIANT

LINKS TO ADDITIONAL RESOURCES

Related Documents | Design Tools | Footprints | Schematics

DESCRIPTION

The VO3150A consists of a LED optically coupled to an integrated circuit with a power output stage. This optocoupler is ideally suited for driving power IGBTs and MOSFETs used in motor control inverter applications. The high operating voltage range of the output stage provides the drive voltages required by gate controlled devices. The voltage and current supplied by this optocoupler makes it ideally suited for directly driving IGBTs with ratings up to 800 V/20 A. For IGBTs with higher ratings, the VO3150A can be used to drive a discrete power stage which drives the IGBT gate.

APPLICATIONS

- Isolated IGBT/MOSFET gate driver
- AC and brushless DC motor drives
- Induction stove top
- Industrial inverters
- Switch mode power supplies (SMPS)
- Uninterruptible power supplies (UPS)

AGENCY APPROVALS

- UL
- cUL
- DIN EN 60747-5-5 (VDE 0884-5), available with option 1

ORDERING INFORMATION

V O 3 1 5 0 A - X 0 0 7 T

PART NUMBER | PACKAGE OPTION | TAPE AND REEL

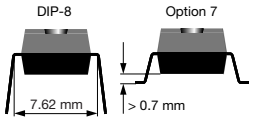

PACKAGE	UL, cUL	UL, cUL, VDE
DIP-8	VO3150A	-
SMD-8, option 7	VO3150A-X007T	VO3150A-X017T

TRUTH TABLE

LED	V_{CC} - V_{EE} "POSITIVE GOING" (TURN ON)	V_{CC} - V_{EE} "NEGATIVE GOING" (TURN OFF)	V_O
Off	0 V to 32 V	0 V to 32 V	Low
On	0 V to 11 V	0 V to 9.5 V	Low
On	11 V to 13.5 V	9.5 V to 12 V	Transition
On	13.5 V to 32 V	12 V to 32 V	High

For technical questions, contact: optocoupleranswers@vishay.com

THIS DOCUMENT IS SUBJECT TO CHANGE WITHOUT NOTICE. THE PRODUCTS DESCRIBED HEREIN AND THIS DOCUMENT ARE SUBJECT TO SPECIFIC DISCLAIMERS, SET FORTH AT www.vishay.com/doc?91000

ABSOLUTE MAXIMUM RATINGS (T_{amb} = 25 °C, unless otherwise specified)				
PARAMETER	**TEST CONDITION**	**SYMBOL**	**VALUE**	**UNIT**
INPUT				
Input forward current		I_F	25	mA
Peak transient input current	< 1 µs pulse width, 300 pps	$I_{F(TRAN)}$	1	A
Reverse input voltage		V_R	5	V
Output power dissipation		P_{diss}	45	mW
OUTPUT				
High peak output current (1)		$I_{OH(PEAK)}$	0.5	A
Low peak output current (1)		$I_{OL(PEAK)}$	0.5	A
Supply voltage		(V_{CC} - V_{EE})	0 to + 35	V
Output voltage		$V_{O(PEAK)}$	0 to + V_{CC}	V
Output power dissipation		P_{diss}	250	mW
OPTOCOUPLER				
Isolation test voltage (between emitter and detector, climate per DIN 500414, part 2, Nov. 74)	t = 1 s	V_{ISO}	5300	V_{RMS}
Storage temperature range		T_S	-55 to +125	°C
Ambient operating temperature range		T_{amb}	-40 to +110	°C
Total power dissipation		P_{tot}	295	mW
Lead solder temperature (2)	for 10 s, 1.6 mm below seating plane	T_{sld}	260	°C

Notes

- Stresses in excess of the absolute maximum ratings can cause permanent damage to the device. Functional operation of the device is not implied at these or any other conditions in excess of those given in the operational sections of this document. Exposure to absolute maximum ratings for extended periods of the time can adversely affect reliability.

(1) Maximum pulse width = 10 µs, maximum duty cycle = 0.2 %. This value is intended to allow for component tolerances for designs with I_O peak minimum = 0.5 A. See applications section for additional details on limiting I_{OH} peak.

(2) Refer to reflow profile for soldering conditions for surface mounted devices (SMD). Refer to wave profile for soldering conditions for through hole devices (DIP).

RECOMMENDED OPERATING CONDITION				
PARAMETER	**SYMBOL**	**MIN.**	**MAX.**	**UNIT**
Power supply voltage	V_{CC} - V_{EE}	15	32	V
Input LED current (on)	I_F	7	16	mA
Input voltage (off)	$V_{F(OFF)}$	-3	0.8	V
Operating temperature	T_{amb}	-40	+110	°C

For technical questions, contact: optocoupleranswers@vishay.com
THIS DOCUMENT IS SUBJECT TO CHANGE WITHOUT NOTICE. THE PRODUCTS DESCRIBED HEREIN AND THIS DOCUMENT ARE SUBJECT TO SPECIFIC DISCLAIMERS, SET FORTH AT www.vishay.com/doc?91000

THERMAL CHARACTERISTICS

PARAMETER	SYMBOL	VALUE	UNIT
LED power dissipation	P_{diss}	45	mW
Output power dissipation	P_{diss}	250	mW
Total power dissipation	P_{tot}	285	mW
Maximum LED junction temperature	$T_{jmax.}$	125	°C
Maximum output die junction temperature	$T_{jmax.}$	125	°C
Thermal resistance, junction emitter to board	θ_{JEB}	169	°C/W
Thermal resistance, junction emitter to case	θ_{JEC}	192	°C/W
Thermal resistance, junction detector to board	θ_{JDB}	82	°C/W
Thermal resistance, junction detector to case	θ_{JDC}	80	°C/W
Thermal resistance, junction emitter to junction detector	θ_{JED}	200	°C/W
Thermal resistance, case to ambient	θ_{CA}	2645	°C/W

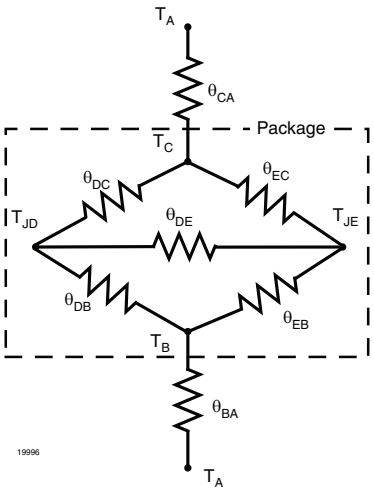

Note

- The thermal model is represented in the thermal network below. Each resistance value given in this model can be used to calculate the temperatures at each node for a given operating condition. The thermal resistance from board to ambient will be dependent on the type of PCB, layout and thickness of copper traces. For a detailed explanation of the thermal model, please reference Vishay's Thermal Characteristics of Optocouplers application note.

ELECTRICAL CHARACTERISTICS

PARAMETER	TEST CONDITION	SYMBOL	MIN.	TYP.	MAX.	UNIT
High level output current	I_F = 16 mA, R_g = 10 Ω, C_g = 20 nF, V_{CC} = 15 V, V_{EE} = 0 V	I_{OH} (1)	0.5	-	-	A
Low level output current	I_F = 0 mA, R_g = 10 Ω, C_g = 20 nF, V_{CC} = 15 V, V_{EE} = 0 V	I_{OL} (1)	0.5	-	-	A
High level output voltage	I_O = -100 mA	V_{OH} (2)	V_{CC} - 4	V_{CC} - 2.1	-	V
Low level output voltage	I_O = 100 mA	V_{OL}	-	0.2	0.5	V
High level supply current	Output open, I_F = 7 mA to 16 mA	I_{CCH}	-	-	2.5	mA
Low level supply current	Output open, V_F = -3 V to + 0.8 V	I_{CCL}	-	-	2.5	mA
Threshold input current low to high	I_O = 0 mA, V_O > 5 V	I_{FLH}	-	2.1	5	mA
Threshold input voltage high to low		V_{FHL}	0.8	-	-	V
Input forward voltage	I_F = 10 mA	V_F	1	1.3	1.6	V
Temperature coefficient of forward voltage	I_F = 10 mA	$\Delta V_F/\Delta T_A$	-	- 1.4	-	mV/°C
Input reverse breakdown voltage	I_R = 10 µA	BVP	5	-	-	V
Input capacitance	f = 1 MHz, V_F = 0 V	C_{IN}	-	60	-	pF
UVLO threshold	$V_O \geq$ 5 V	V_{UVLO+}	11	12.6	13.5	V
	I_F = 10 mA	V_{UVLO-}	9.5	10.7	12	V
UVLO hysteresis		$UVLO_{HYS}$	-	1.9	-	V

Notes

- Minimum and maximum values were tested over recommended operating conditions (T_{amb} = - 40 °C to 110 °C, $I_{F(ON)}$ = 7 mA to 16 mA, $V_{F(OFF)}$ = - 3 V to 0.8 V, V_{CC} = 15 V to 32 V, V_{EE} = ground) unless otherwise specified. Typical values are characteristics of the device and are the result of engineering evaluations. Typical values are for information only and are not part of the testing requirements. All typical values were measured at T_{amb} = 25 °C and with V_{CC} - V_{EE} = 32 V.
- Maximum pulse width = 50 µs, maximum duty cycle = 0.5 %.

(1) Maximum pulse width = 10 µs, maximum duty cycle = 0.2 %. This value is intended to allow for component tolerances for designs with I_O peak minimum = 0.5 A.

(2) In this test V_{OH} is measured with a dc load current. When driving capacitive loads V_{OH} will approach V_{CC} as I_{OH} approaches zero A. Maximum pulse width = 1 ms, maximum duty cycle = 20 %.

For technical questions, contact: optocoupleranswers@vishay.com
THIS DOCUMENT IS SUBJECT TO CHANGE WITHOUT NOTICE. THE PRODUCTS DESCRIBED HEREIN AND THIS DOCUMENT ARE SUBJECT TO SPECIFIC DISCLAIMERS, SET FORTH AT www.vishay.com/doc?91000

TEST CIRCUITS

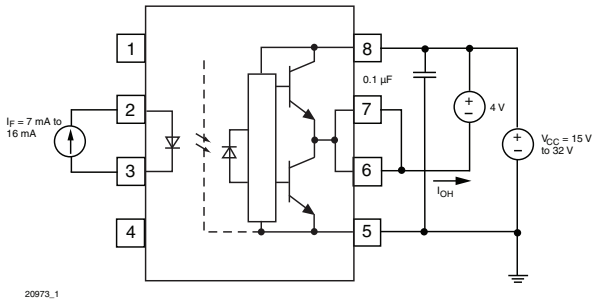

Fig. 1 - I_{OH} Test Circuit

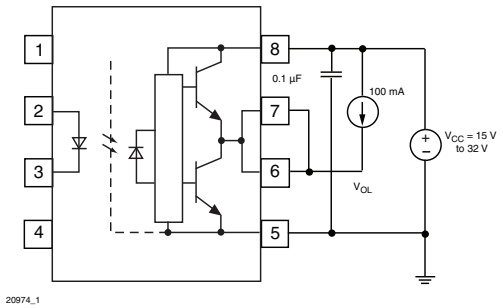

Fig. 4 - V_{OL} Test Circuit

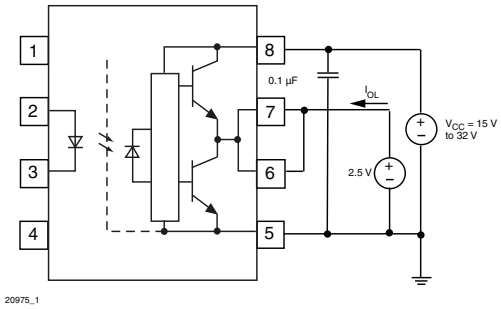

Fig. 2 - I_{OL} Test Circuit

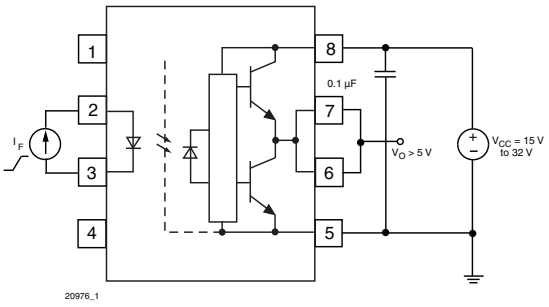

Fig. 5 - I_{FLH} Test Circuit

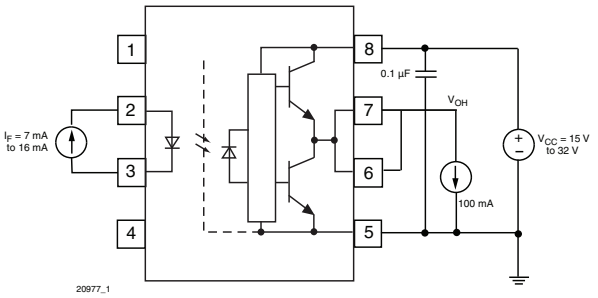

Fig. 3 - V_{OH} Test Circuit

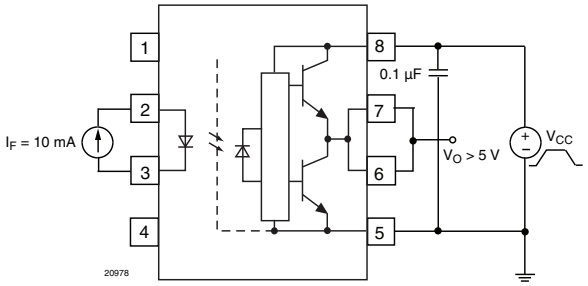

Fig. 6 - UVLO Test Circuit

For technical questions, contact: optocoupleranswers@vishay.com
THIS DOCUMENT IS SUBJECT TO CHANGE WITHOUT NOTICE. THE PRODUCTS DESCRIBED HEREIN AND THIS DOCUMENT ARE SUBJECT TO SPECIFIC DISCLAIMERS, SET FORTH AT www.vishay.com/doc?91000

SWITCHING CHARACTERISTICS

PARAMETER	TEST CONDITION	SYMBOL	MIN.	TYP.	MAX.	UNIT
Propagation delay time to logic low output (1)	R_g = 47 Ω, C_g = 3 nF, f = 10 kHz, duty cycle = 50 %	t_{PHL}	0.1	-	0.4	µs
Propagation delay time to logic high output (1)	R_g = 47 Ω, C_g = 3 nF, f = 10 kHz, duty cycle = 50 %	t_{PLH}	0.1	-	0.4	µs
Pulse width distortion (2)	R_g = 47 Ω, C_g = 3 nF, f = 10 kHz, duty cycle = 50 %	PWD	-	-	0.2	µs
Propagation delay difference between any two parts (3)	R_g = 47 Ω, C_g = 3 nF, f = 10 kHz, duty cycle = 50 %	PDD (t_{PHL} - t_{PLH})	-0.35	-	0.35	µs
Rise time	R_g = 47 Ω, C_g = 3 nF, f = 10 kHz, duty cycle = 50 %	t_r	-	0.1	-	µs
Fall time	R_g = 47 Ω, C_g = 3 nF, f = 10 kHz, duty cycle = 50 %	t_f	-	0.1	-	µs
UVLO turn on delay	V_O > 5 V, I_F = 10 mA	$T_{UVLO-ON}$	-	0.8	-	µs
UVLO turn off delay	V_O > 5 V, I_F = 10 mA	$T_{UVLO-OFF}$	-	0.6	-	µs

Notes

(1) This load condition approximates the gate load of a 1200 V/25 A IGBT.

(2) Pulse width distortion (PWD) is defined as $|t_{PHL} - t_{PLH}|$ for any given device.

(3) The difference between t_{PHL} and t_{PLH} between any two VO3150A parts under the same test condition.

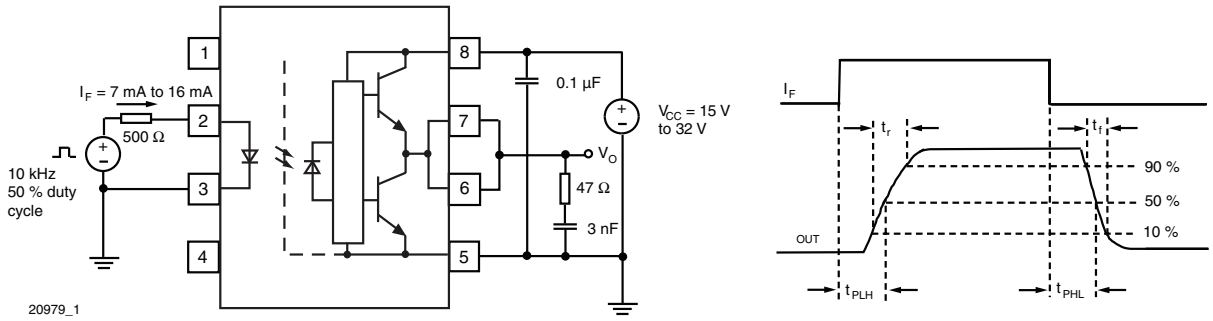

Fig. 7 - t_{PLH}, t_{PHL}, t_r and t_f Test Circuit and Waveforms

COMMON MODE TRANSIENT IMMUNITY

PARAMETER	TEST CONDITION	SYMBOL	MIN.	TYP.	MAX.	UNIT
Common mode transient immunity at logic high output (1)(2)	T_A = 25 °C, I_F = 10 mA to 16 mA, V_{CM} = 1500 V, V_{CC} = 32 V	$\|CM_H\|$	25	35	-	kV/µs
Common mode transient immunity at logic low output (1)(3)	T_A = 25 °C, V_{CM} = 1500 V, V_{CC} = 32 V, V_F = 0 V	$\|CM_L\|$	25	35	-	kV/µs

Notes

(1) Pins 1 and 4 need to be connected to LED common.

(2) Common mode transient immunity in the high state is the maximum tolerable $|dV_{CM}/dt|$ of the common mode pulse, V_{CM}, to assure that the output will remain in the high state (i.e., V_O > 15 V).

(3) Common mode transient immunity in a low state is the maximum tolerable $|dV_{CM}/dt|$ of the common mode pulse, V_{CM}, to assure that the output will remain in a low state (i.e., V_O < 1 V).

For technical questions, contact: optocoupleranswers@vishay.com
THIS DOCUMENT IS SUBJECT TO CHANGE WITHOUT NOTICE. THE PRODUCTS DESCRIBED HEREIN AND THIS DOCUMENT ARE SUBJECT TO SPECIFIC DISCLAIMERS, SET FORTH AT www.vishay.com/doc?91000

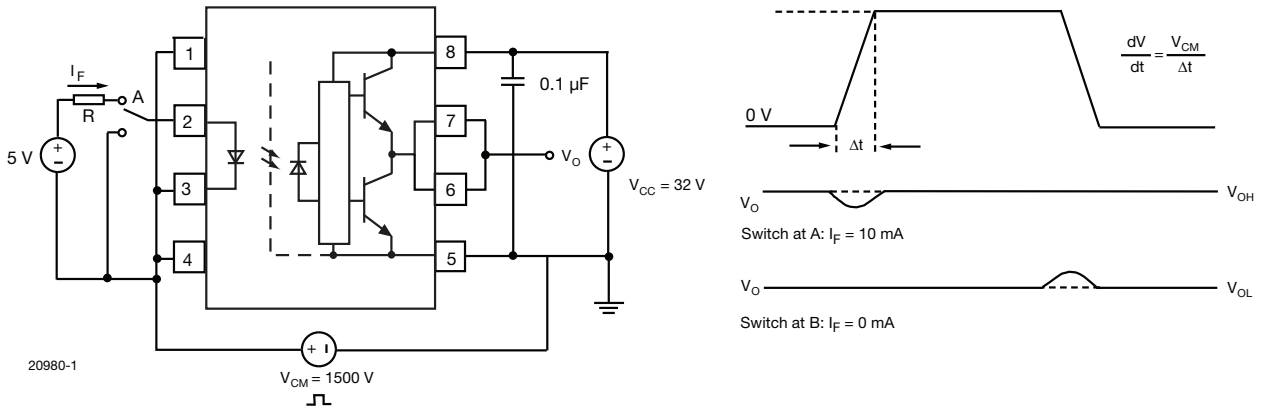

Fig. 8 - CMR Test Circuit and Waveforms

SAFETY AND INSULATION RATINGS						
PARAMETER	**TEST CONDITION**	**SYMBOL**	**MIN.**	**TYP.**	**MAX.**	**UNIT**
Climatic classification (according to IEC 68 part 1)			-	40 / 110 / 21	-	
Comparative tracking index		CTI	175	-	399	
V_{IOTM}			8000	-	-	V
V_{IORM}			890	-	-	V
P_{SO}			-	-	500	mW
I_{SI}			-	-	300	mA
T_{SI}			-	-	175	°C
Creepage distance	Standard DIP-8		7	-	-	mm
Clearance distance	Standard DIP-8		7	-	-	mm
Creepage distance	400 mil DIP-8		8	-	-	mm
Clearance distance	400 mil DIP-8		8	-	-	mm

Note

- As per IEC 60747-5-5, §7.4.3.8.1, this optocoupler is suitable for “safe electrical insulation” only within the safety ratings. Compliance with the safety ratings shall be ensured by means of prodective circuits.

TYPICAL CHARACTERISTICS (T_{amb} = 25 °C, unless otherwise specified)

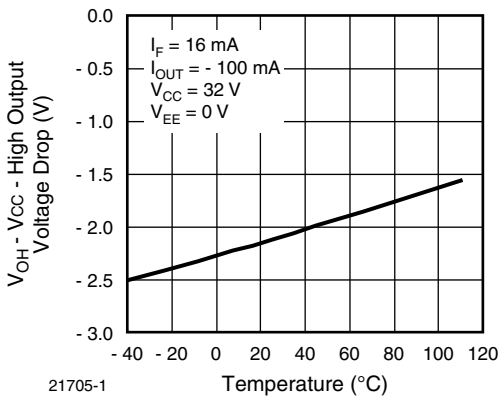

Fig. 9 - High Output Voltage Drop vs. Temperature

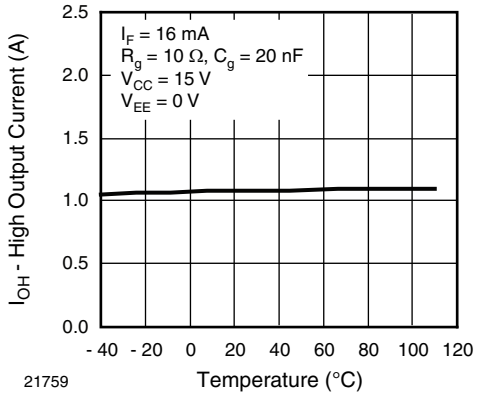

Fig. 10 - High Output Current vs. Temperature

For technical questions, contact: optocoupleranswers@vishay.com
THIS DOCUMENT IS SUBJECT TO CHANGE WITHOUT NOTICE. THE PRODUCTS DESCRIBED HEREIN AND THIS DOCUMENT ARE SUBJECT TO SPECIFIC DISCLAIMERS, SET FORTH AT www.vishay.com/doc?91000

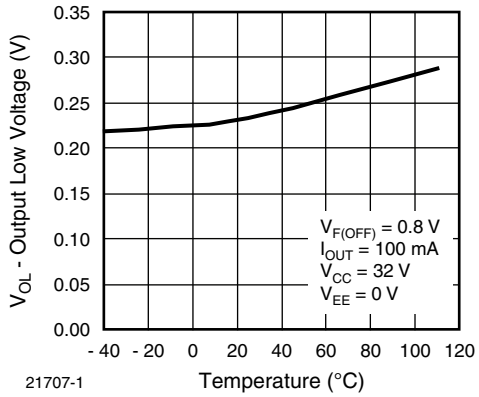

Fig. 11 - Output Low Voltage vs. Temperature

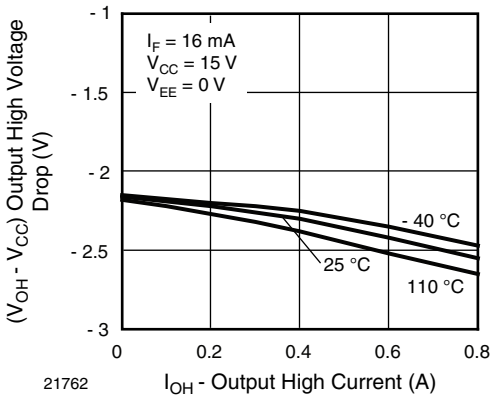

Fig. 14 - Output High Voltage Dropvs. Output High Current

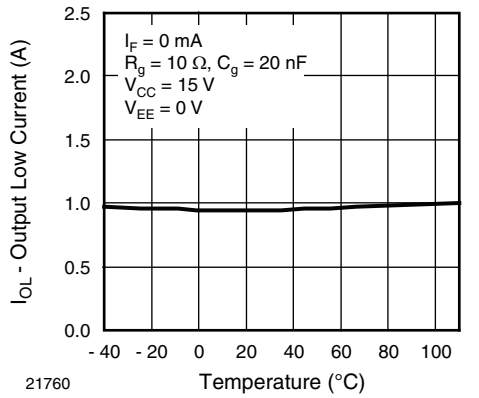

Fig. 12 - Output Low Current vs. Temperature

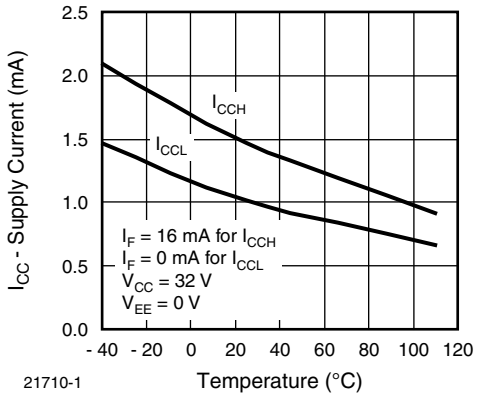

Fig. 15 - Supply Current vs. Temperature

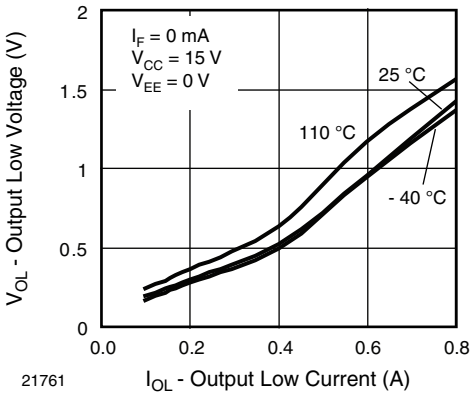

Fig. 13 - Output Low Voltage vs. Output Low Current

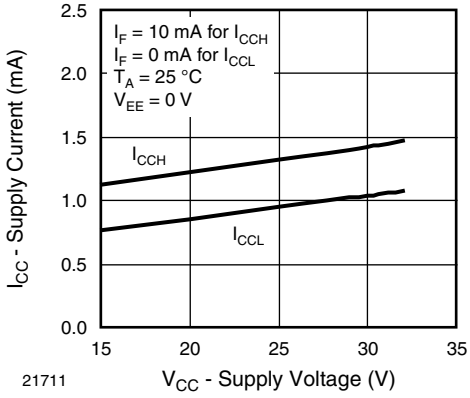

Fig. 16 - Supply Current vs. Supply Voltage

For technical questions, contact: optocoupleranswers@vishay.com
THIS DOCUMENT IS SUBJECT TO CHANGE WITHOUT NOTICE. THE PRODUCTS DESCRIBED HEREIN AND THIS DOCUMENT ARE SUBJECT TO SPECIFIC DISCLAIMERS, SET FORTH AT www.vishay.com/doc?91000

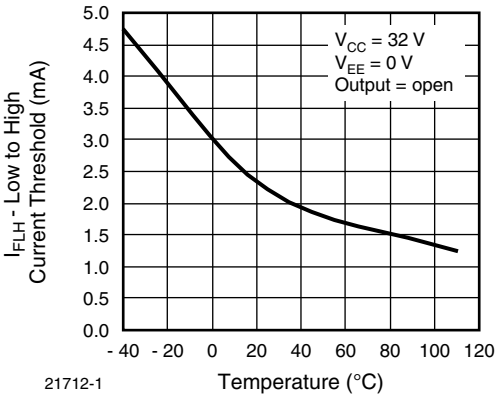

Fig. 17 - Low to High Current Threshold vs. Temperature

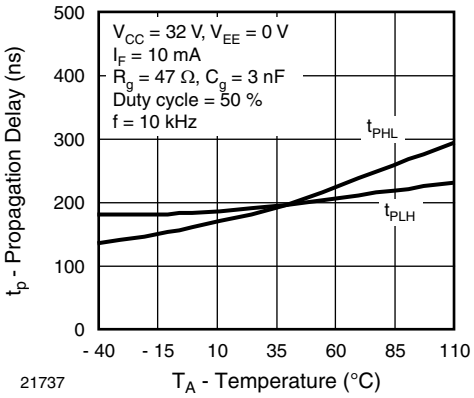

Fig. 20 - Propagation Delay vs. Temperature

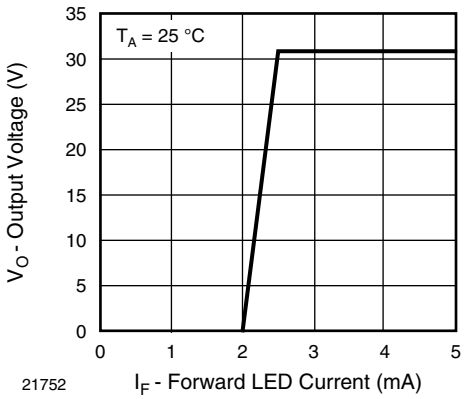

Fig. 18 - Transfer Characteristics

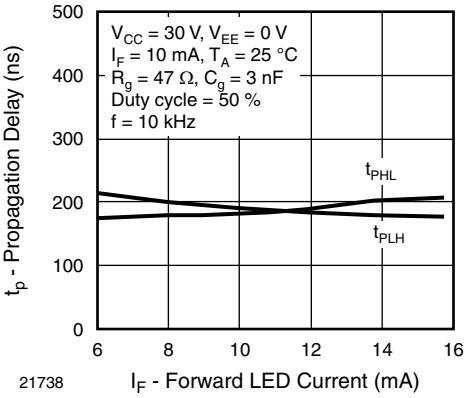

Fig. 21 - Propagation Delay vs. Forward LED Current

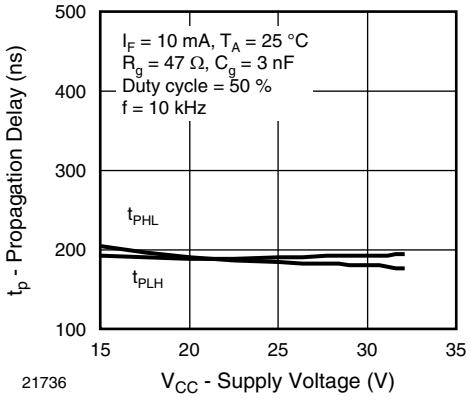

Fig. 19 - Propagation Delay vs. Supply Voltage

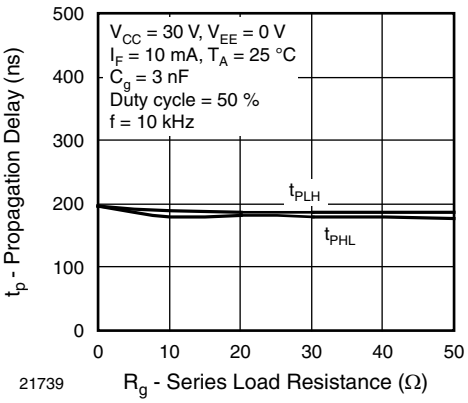

Fig. 22 - Propagation Delay vs. Series Load Resistance

For technical questions, contact: optocoupleranswers@vishay.com
THIS DOCUMENT IS SUBJECT TO CHANGE WITHOUT NOTICE. THE PRODUCTS DESCRIBED HEREIN AND THIS DOCUMENT ARE SUBJECT TO SPECIFIC DISCLAIMERS, SET FORTH AT www.vishay.com/doc?91000

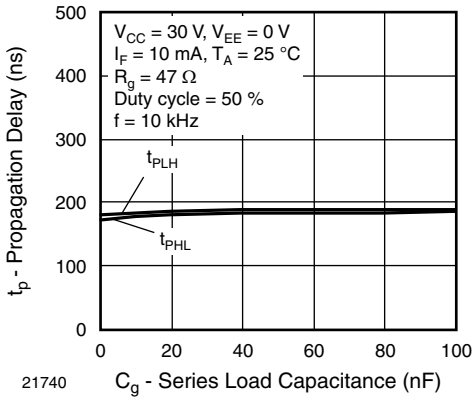

Fig. 23 - Propagation Delay vs. Series Load Capacitance

PACKAGE DIMENSIONS in millimeters

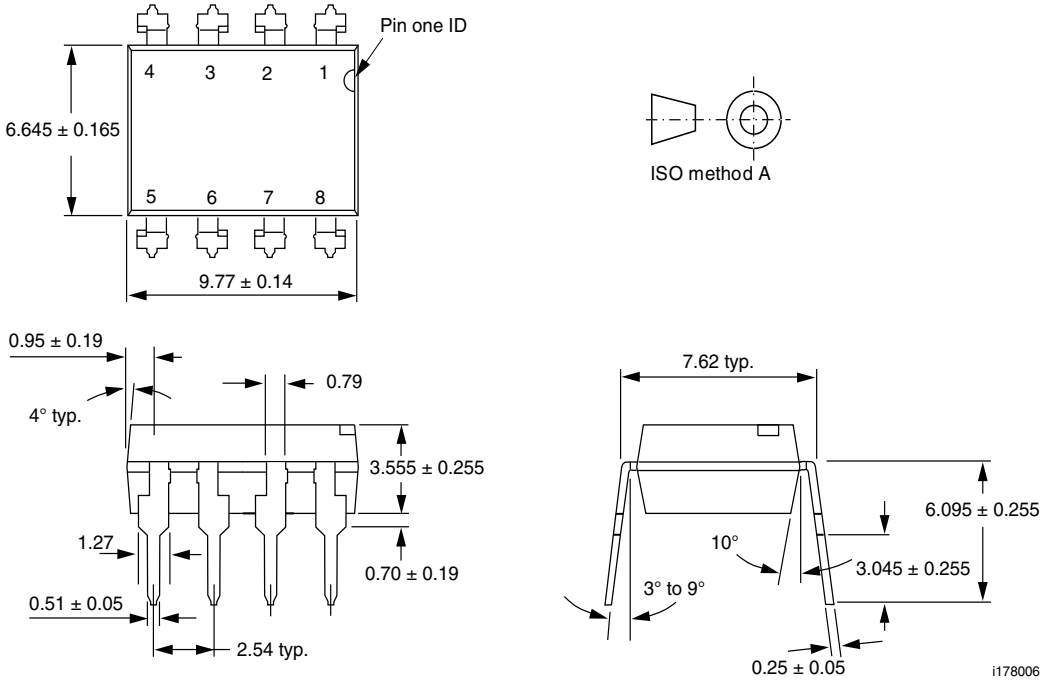

Option 7

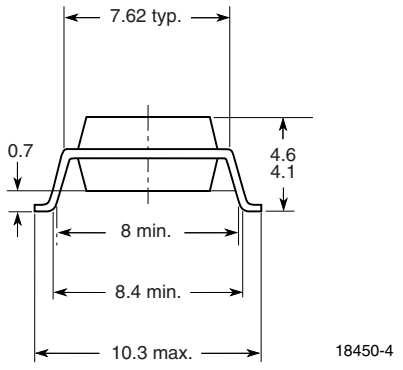

For technical questions, contact: optocoupleranswers@vishay.com
THIS DOCUMENT IS SUBJECT TO CHANGE WITHOUT NOTICE. THE PRODUCTS DESCRIBED HEREIN AND THIS DOCUMENT ARE SUBJECT TO SPECIFIC DISCLAIMERS, SET FORTH AT www.vishay.com/doc?91000

PACKAGE MARKING

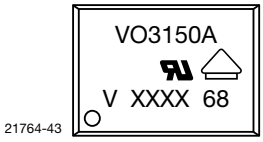

Notes

- XXXX = LMC (lot marking code)
- VDE logo is only marked on option 1 parts. Option information is not marked on the part

For technical questions, contact: optocoupleranswers@vishay.com
THIS DOCUMENT IS SUBJECT TO CHANGE WITHOUT NOTICE. THE PRODUCTS DESCRIBED HEREIN AND THIS DOCUMENT ARE SUBJECT TO SPECIFIC DISCLAIMERS, SET FORTH AT www.vishay.com/doc?91000

Disclaimer

ALL PRODUCT, PRODUCT SPECIFICATIONS AND DATA ARE SUBJECT TO CHANGE WITHOUT NOTICE TO IMPROVE RELIABILITY, FUNCTION OR DESIGN OR OTHERWISE.

Vishay Intertechnology, Inc., its affiliates, agents, and employees, and all persons acting on its or their behalf (collectively, “Vishay”), disclaim any and all liability for any errors, inaccuracies or incompleteness contained in any datasheet or in any other disclosure relating to any product.

Vishay makes no warranty, representation or guarantee regarding the suitability of the products for any particular purpose or the continuing production of any product. To the maximum extent permitted by applicable law, Vishay disclaims (i) any and all liability arising out of the application or use of any product, (ii) any and all liability, including without limitation special, consequential or incidental damages, and (iii) any and all implied warranties, including warranties of fitness for particular purpose, non-infringement and merchantability.

Statements regarding the suitability of products for certain types of applications are based on Vishay's knowledge of typical requirements that are often placed on Vishay products in generic applications. Such statements are not binding statements about the suitability of products for a particular application. It is the customer's responsibility to validate that a particular product with the properties described in the product specification is suitable for use in a particular application. Parameters provided in datasheets and / or specifications may vary in different applications and performance may vary over time. All operating parameters, including typical parameters, must be validated for each customer application by the customer's technical experts. Product specifications do not expand or otherwise modify Vishay's terms and conditions of purchase, including but not limited to the warranty expressed therein.

Hyperlinks included in this datasheet may direct users to third-party websites. These links are provided as a convenience and for informational purposes only. Inclusion of these hyperlinks does not constitute an endorsement or an approval by Vishay of any of the products, services or opinions of the corporation, organization or individual associated with the third-party website. Vishay disclaims any and all liability and bears no responsibility for the accuracy, legality or content of the third-party website or for that of subsequent links.

Vishay products are not designed for use in life-saving or life-sustaining applications or any application in which the failure of the Vishay product could result in personal injury or death unless specifically qualified in writing by Vishay. Customers using or selling Vishay products not expressly indicated for use in such applications do so at their own risk. Please contact authorized Vishay personnel to obtain written terms and conditions regarding products designed for such applications.

No license, express or implied, by estoppel or otherwise, to any intellectual property rights is granted by this document or by any conduct of Vishay. Product names and markings noted herein may be trademarks of their respective owners.

© 2024 VISHAY INTERTECHNOLOGY, INC. ALL RIGHTS RESERVED

THIS DOCUMENT IS SUBJECT TO CHANGE WITHOUT NOTICE. THE PRODUCTS DESCRIBED HEREIN AND THIS DOCUMENT ARE SUBJECT TO SPECIFIC DISCLAIMERS, SET FORTH AT www.vishay.com/doc?91000