Optocoupler, Phototriac Output, Zero Crossing, High dV/dt, Low Input Current

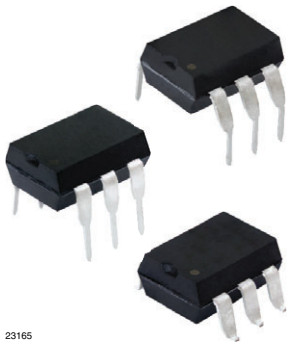

23165

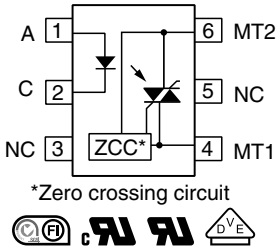

*Zero crossing circuit

LINKS TO ADDITIONAL RESOURCES

Design Tools | Related Documents | 3D Models | Models | Footprints | Schematics

DESCRIPTION

The VO4154 and VO4156 consists of a GaAs IRLED optically coupled to a photosensitive zero crossing TRIAC packaged in a DIP-6 package.

High input sensitivity is achieved by using an emitter follower phototransistor and a cascaded SCR predriver resulting in an LED trigger current of 1.6 mA for bin D, 2 mA for bin H, and 3 mA for bin M.

The phototriac zero crossing family uses a proprietary dV/dt clamp resulting in a static dV/dt of greater than 5 kV/µs.

The VO4154 and VO4156 isolates low-voltage logic from 120 V_{AC}, 240 V_{AC}, and 380 V_{AC} lines to control resistive, inductive, or capacitive loads including motors, solenoids, high current thyristors or TRIAC and relays.

FEATURES

- High static dV/dt 5 kV/µs
- High input sensitivity I_{FT} = 1.6 mA, 2 mA, and 3 mA
- 300 mA on-state current
- Zero voltage crossing detector
- 400 V and 600 V blocking voltage
- Isolation rated voltage 4420 V_{RMS}
- Material categorization: for definitions of compliance please see www.vishay.com/doc?99912

Pb-free

e3

RoHS COMPLIANT

APPLICATIONS

- Solid-state relays
- Industrial controls
- Office equipment
- Consumer appliances

AGENCY APPROVALS

- UL 1577
- cUL
- DIN EN 60747-5-5 (VDE 0884-5), available with option 1
- FIMKO

ORDERING INFORMATION

V	O	4	1	5	#	X	-	X	0	0	#	T

PART NUMBER | PACKAGE OPTION | TAPE AND REEL

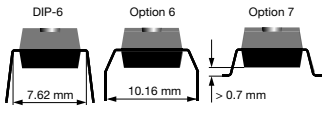

AGENCY CERTIFIED / PACKAGE	V_{DRM} 400		V_{DRM} 600		
	TRIGGER CURRENT, I_{FT} (mA)				
UL, cUL, FIMKO	**1.6**	**3**	**1.6**	**2**	**3**
DIP-6, 400 mil, option 6	-	-	-	-	VO4156M-X006
SMD-6, option 7	VO4154D-X007T	VO4154M-X007T	-	VO4156H-X007T	VO4156M-X007T
UL, cUL, FIMKO, VDE (option 1)	**1.6**	**3**	**1.6**	**2**	**3**
SMD-6, option 7	-	-	VO4156D-X017T	-	-

Notes

- Also available in tubes, do not put “T” to the end
- Additional options may be possible, please contact sales office

For technical questions, contact: optocoupleranswers@vishay.com

THIS DOCUMENT IS SUBJECT TO CHANGE WITHOUT NOTICE. THE PRODUCTS DESCRIBED HEREIN AND THIS DOCUMENT ARE SUBJECT TO SPECIFIC DISCLAIMERS, SET FORTH AT www.vishay.com/doc?91000

ABSOLUTE MAXIMUM RATINGS (T_{amb} = 25 °C, unless otherwise specified)					
PARAMETER	**TEST CONDITION**	**PART**	**SYMBOL**	**VALUE**	**UNIT**
INPUT					
Reverse voltage			V_R	6	V
Forward current			I_F	60	mA
Surge current			I_{FSM}	2.5	A
Power dissipation			P_{diss}	100	mW
Derate from 25 °C				1.33	mW/°C
OUTPUT					
Peak off-state voltage		VO4154D/M	V_{DRM}	400	V
		VO4156D/H/M	V_{DRM}	600	V
RMS on-state current			I_{TM}	300	mA
Total power dissipation			P_{diss}	500	mW
Derate from 25 °C				6.6	mW/°C
COUPLER					
Storage temperature range			T_{stg}	-55 to +150	°C
Ambient temperature range			T_{amb}	-55 to +100	°C
Soldering temperature	Max. ≤ 10 s dip soldering ≥ 0.5 mm from case bottom		T_{sld}	260	°C

Note

- Stresses in excess of the absolute maximum ratings can cause permanent damage to the device. Functional operation of the device is not implied at these or any other conditions in excess of those given in the operational sections of this document. Exposure to absolute maximum ratings for extended periods of the time can adversely affect reliability.

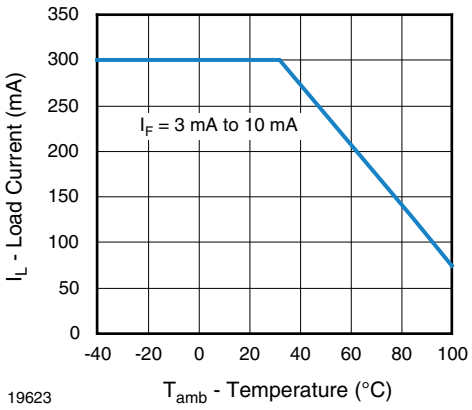

Fig. 1 - Recommended Operating Condition

For technical questions, contact: optocoupleranswers@vishay.com

THIS DOCUMENT IS SUBJECT TO CHANGE WITHOUT NOTICE. THE PRODUCTS DESCRIBED HEREIN AND THIS DOCUMENT ARE SUBJECT TO SPECIFIC DISCLAIMERS, SET FORTH AT www.vishay.com/doc?91000

THERMAL CHARACTERISTICS

PARAMETER	SYMBOL	VALUE	UNIT
LED power dissipation	P_{diss}	100	mW
Output power dissipation	P_{diss}	500	mW
Maximum LED junction temperature	$T_{jmax.}$	125	°C
Maximum output die junction temperature	$T_{jmax.}$	125	°C
Thermal resistance, junction emitter to board	θ_{JEB}	150	°C/W
Thermal resistance, junction emitter to case	θ_{JEC}	139	°C/W
Thermal resistance, junction detector to board	θ_{JDB}	78	°C/W
Thermal resistance, junction detector to case	θ_{JDC}	103	°C/W
Thermal resistance, junction emitter to junction detector	θ_{JED}	496	°C/W
Thermal resistance, case to ambient	θ_{CA}	3563	°C/W

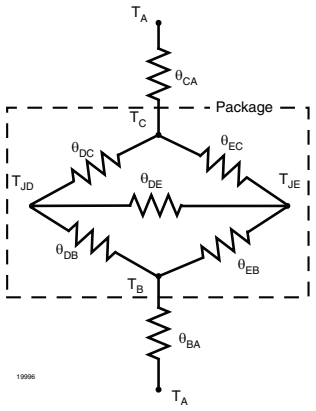

Note

- The thermal characteristics table above were measured at 25 °C and the thermal model is represented in the thermal network below. Each resistance value given in this model can be used to calculate the temperatures at each node for a given operating condition. The thermal resistance from board to ambient will be dependent on the type of PCB, layout and thickness of copper traces. For a detailed explanation of the thermal model, please reference Vishay's Thermal Characteristics of Optocouplers application note.

ELECTRICAL CHARACTERISTICS (T_{amb} = 25 °C, unless otherwise specified)

PARAMETER	TEST CONDITION	PART	SYMBOL	MIN.	TYP.	MAX.	UNIT
INPUT							
Forward voltage	I_F = 10 mA		V_F	-	1.2	1.4	V
Reverse current	V_R = 6 V		I_R	-	0.1	10	µA
Input capacitance	V_F = 0 V, f = 1 MHz		C_I	-	25	-	pF
OUTPUT							
Repetitive peak off-state voltage	I_{DRM} = 100 µA	VO4154D/M	V_{DRM}	400	-	-	V
		VO4156D/H/M	V_{DRM}	600	-	-	V
Off-state current	$V_D = V_{DRM}$, I_F = 0 A		I_{DRM}	-	-	100	µA
On-state voltage	I_T = 300 mA		V_{TM}	-	-	3	V
On-state current	PF = 1, $V_{T(RMS)}$ = 1.7 V		I_{TM}	-	-	300	mA
Off-state current in inhibit state	I_F = 2 mA, V_{DRM}		I_{DINH}	-	-	200	µA
Holding current			I_H	-	-	500	µA
Zero cross inhibit voltage	I_F = rated I_{FT}		V_{IH}	-	-	20	V
Critical rate of rise of off-state voltage	V_D = 0.67 V_{DRM}, T_J = 25 °C		dV/dt_{cr}	5000	-	-	V/µs
Critical rate of rise of on-state			dV/dt_{cr}	8	-	-	A/µs
COUPLER							
LED trigger current, current required to latch output	V_D = 3 V	VO4154D	I_{FT}	-	-	1.6	mA
		VO4154M	I_{FT}	-	-	3	mA
		VO4156D	I_{FT}	-	-	1.6	mA
		VO4156H	I_{FT}	-	-	2	mA
		VO4156M	I_{FT}	-	-	3	mA
Common mode coupling capacitance			C_{CM}	-	0.01	-	pF
Capacitance (input to output)	f = 1 MHz, V_{IO} = 0 V		C_{IO}	-	0.8	-	pF

Note

- Minimum and maximum values were tested requirements. Typical values are characteristics of the device and are the result of engineering evaluations. Typical values are for information only and are not part of the testing requirements.

For technical questions, contact: optocoupleranswers@vishay.com
THIS DOCUMENT IS SUBJECT TO CHANGE WITHOUT NOTICE. THE PRODUCTS DESCRIBED HEREIN AND THIS DOCUMENT ARE SUBJECT TO SPECIFIC DISCLAIMERS, SET FORTH AT www.vishay.com/doc?91000

SAFETY AND INSULATION RATINGS				
PARAMETER	**TEST CONDITION**	**SYMBOL**	**VALUE**	**UNIT**
Climatic classification	According to IEC 68 part 1		55 / 100 / 21	
Pollution degree	According to DIN VDE 0109		2	
Comparative tracking index	Insulation group IIIa	CTI	175	
Maximum rated withstanding isolation voltage	According to UL1577, t = 1 min	V_{ISO}	4420	V_{RMS}
Maximum transient isolation voltage	According to DIN EN 60747-5-5	V_{IOTM}	8000	V_{peak}
Maximum repetitive peak isolation voltage	According to DIN EN 60747-5-5	V_{IORM}	890	V_{peak}
Isolation resistance	T_{amb} = 25 °C, V_{IO} = 500 V	R_{IO}	≥ 10^{12}	Ω
	T_{amb} = 100 °C, V_{IO} = 500 V	R_{IO}	≥ 10^{11}	Ω
Output safety power		P_{SO}	500	mW
Input safety current		I_{SI}	250	mA
Input safety temperature		T_S	175	°C
Creepage distance	DIP-6		≥ 7	mm
Clearance distance			≥ 7	mm
Creepage distance	DIP-6, 400 mil, option 6		≥ 8	mm
Clearance distance			≥ 8	mm
Creepage distance	SMD-6, option 7		≥ 7	mm
Clearance distance			≥ 7	mm
Insulation thickness		DTI	≥ 0.4	mm

Note

- As per IEC 60747-5-5, § 7.4.3.8.2, this optocoupler is suitable for “safe electrical insulation” only within the safety ratings. Compliance with the safety ratings shall be ensured by means of protective circuits.

TYPICAL CHARACTERISTICS (T_{amb} = 25 °C, unless otherwise specified)

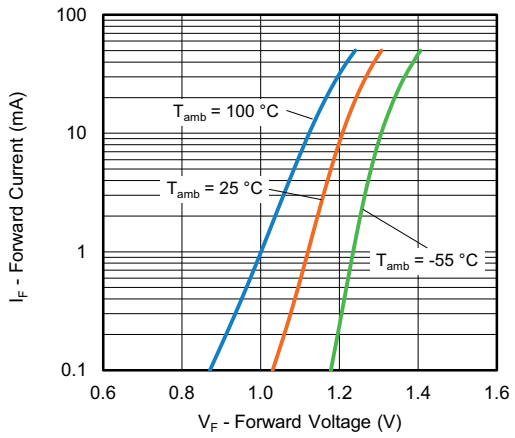

Fig. 2 - Diode Forward Voltage vs. Forward Current

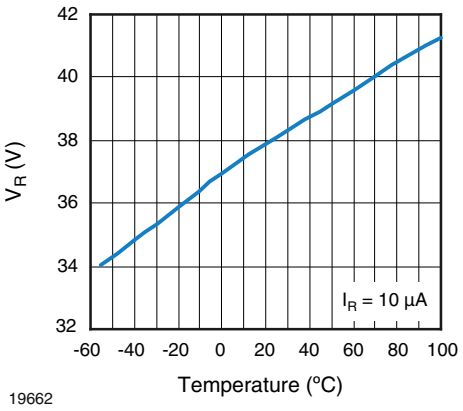

Fig. 3 - Diode Reverse Voltage vs. Temperature

For technical questions, contact: optocoupleranswers@vishay.com

THIS DOCUMENT IS SUBJECT TO CHANGE WITHOUT NOTICE. THE PRODUCTS DESCRIBED HEREIN AND THIS DOCUMENT ARE SUBJECT TO SPECIFIC DISCLAIMERS, SET FORTH AT www.vishay.com/doc?91000

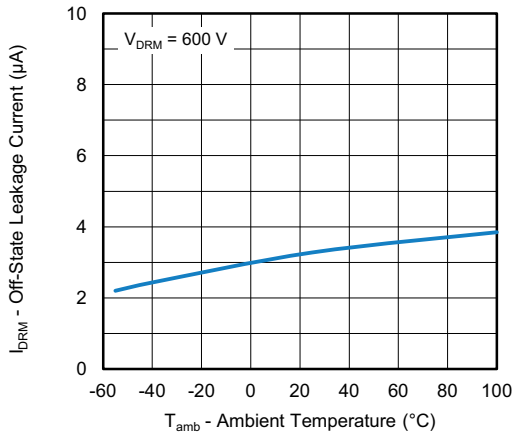

Fig. 4 - Leakage Current vs. Ambient Temperature

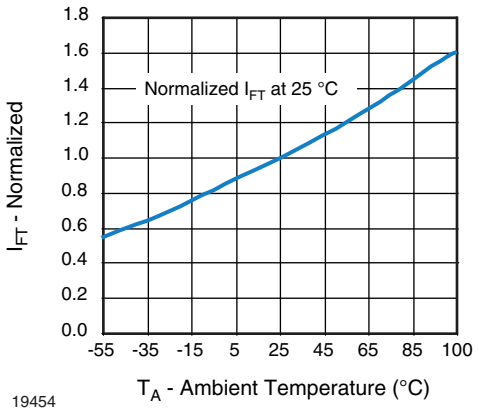

Fig. 7 - Normalized Trigger Input Current vs. Temperature

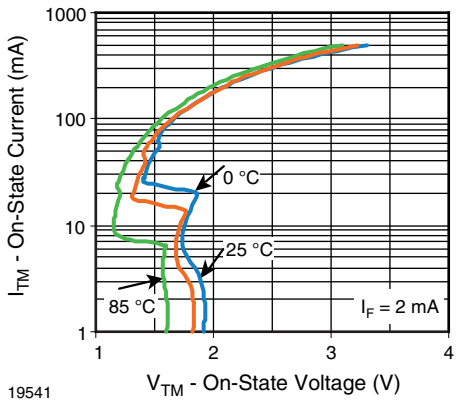

Fig. 5 - On-State Current vs. On-State Voltage

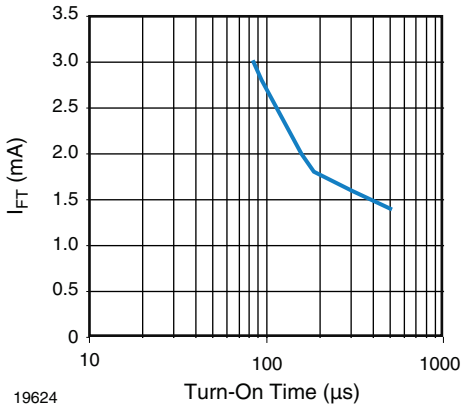

Fig. 8 - I_{FT} (mA) vs. Turn-On Time (µs)

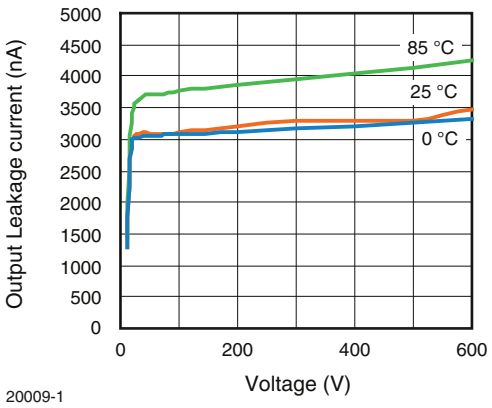

Fig. 6 - Output Off Current (Leakage) vs. Voltage

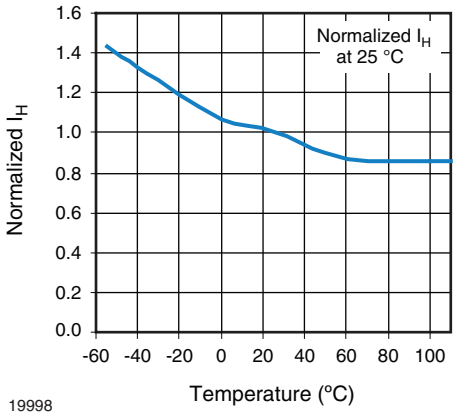

Fig. 9 - Normalized Holding Current vs. Temperature

For technical questions, contact: optocoupleranswers@vishay.com
THIS DOCUMENT IS SUBJECT TO CHANGE WITHOUT NOTICE. THE PRODUCTS DESCRIBED HEREIN AND THIS DOCUMENT ARE SUBJECT TO SPECIFIC DISCLAIMERS, SET FORTH AT www.vishay.com/doc?91000

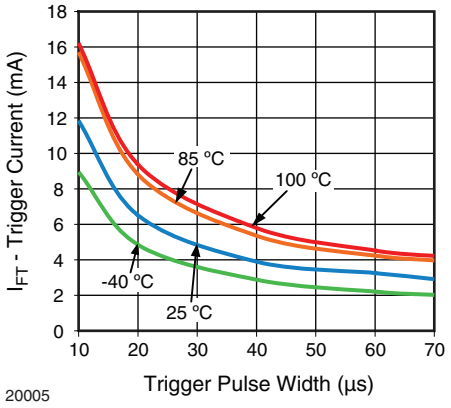

Fig. 10 - I_{FT} vs. LED Pulse Width

PACKAGE DIMENSIONS

DIP-6

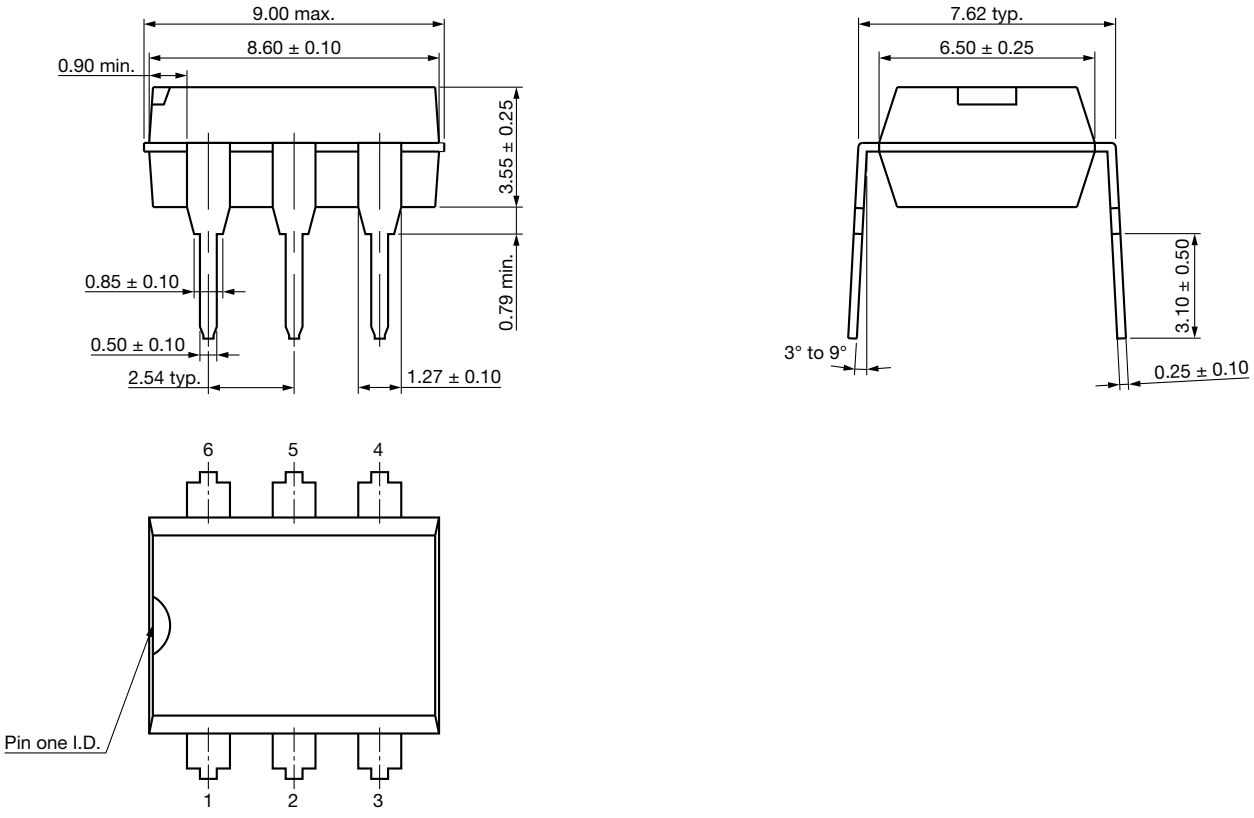

For technical questions, contact: optocoupleranswers@vishay.com
THIS DOCUMENT IS SUBJECT TO CHANGE WITHOUT NOTICE. THE PRODUCTS DESCRIBED HEREIN AND THIS DOCUMENT ARE SUBJECT TO SPECIFIC DISCLAIMERS, SET FORTH AT www.vishay.com/doc?91000

DIP-6, Option 6

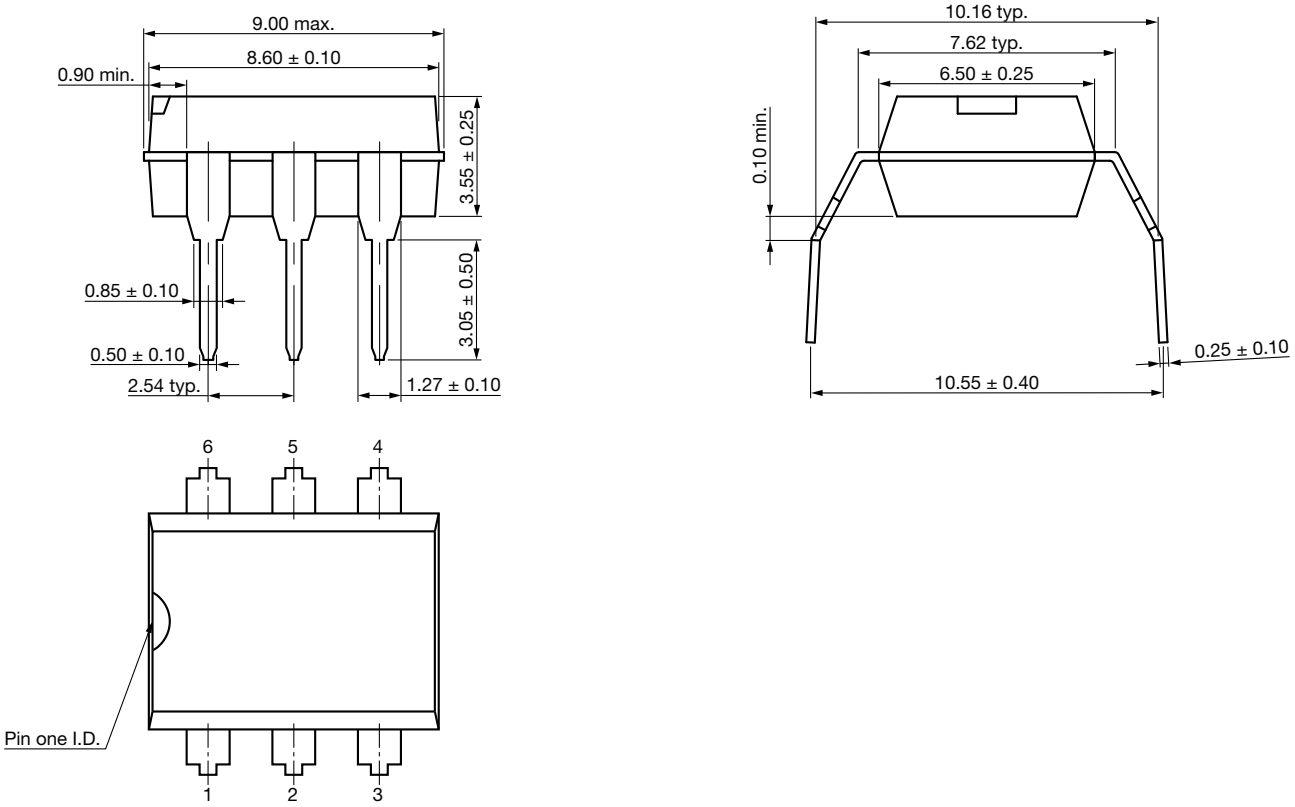

SMD-6, Option 7

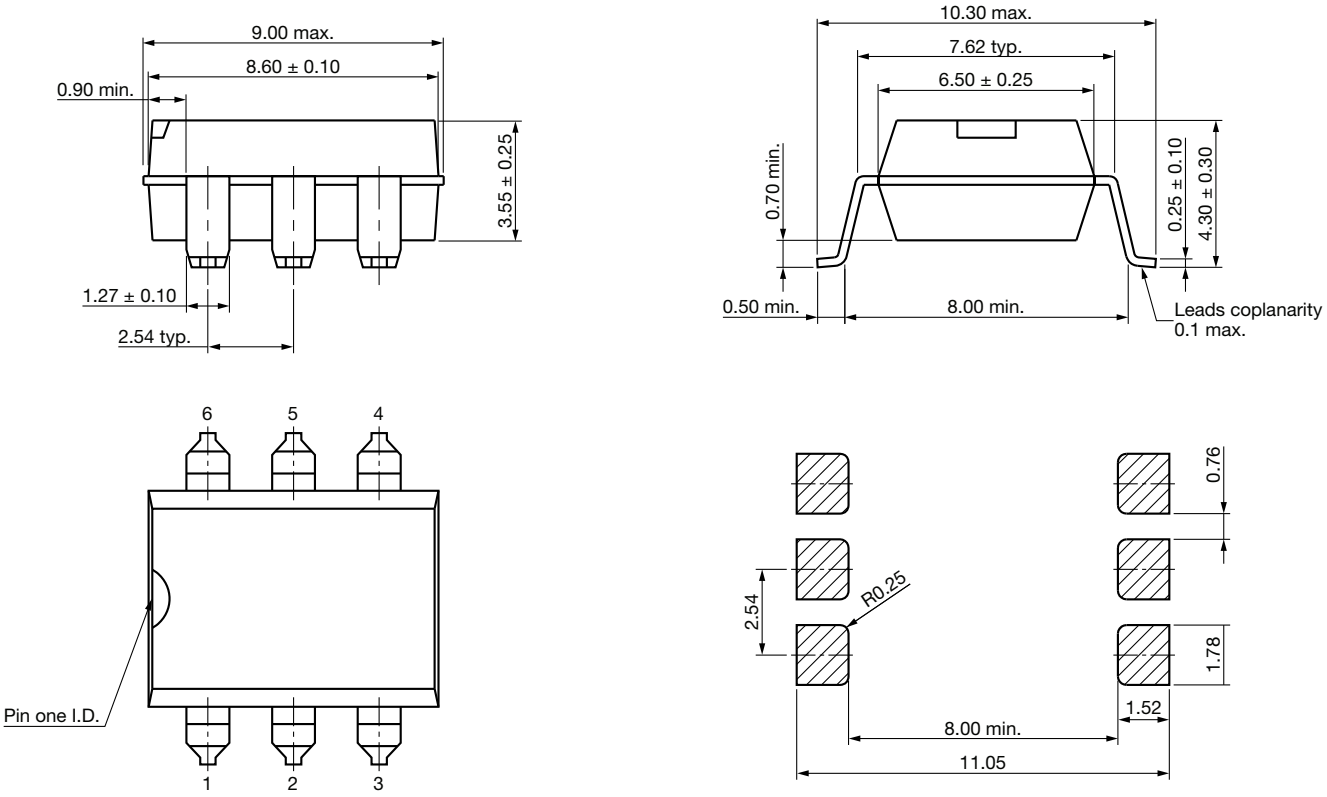

For technical questions, contact: optocoupleranswers@vishay.com
THIS DOCUMENT IS SUBJECT TO CHANGE WITHOUT NOTICE. THE PRODUCTS DESCRIBED HEREIN AND THIS DOCUMENT ARE SUBJECT TO SPECIFIC DISCLAIMERS, SET FORTH AT www.vishay.com/doc?91000

PACKAGE MARKING

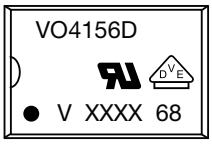

Fig. 11 - Example of VO4156D-X017T

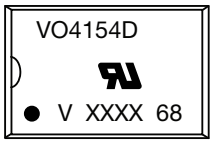

Fig. 12 - Example of VO4154D-X006

Notes

- XXXX = LMC (lot marking code)
- The VDE logo is only marked on option 1 parts
- Tape and reel suffix (T) is not part of the package marking

PACKING INFORMATION (in millimeters)

Tube

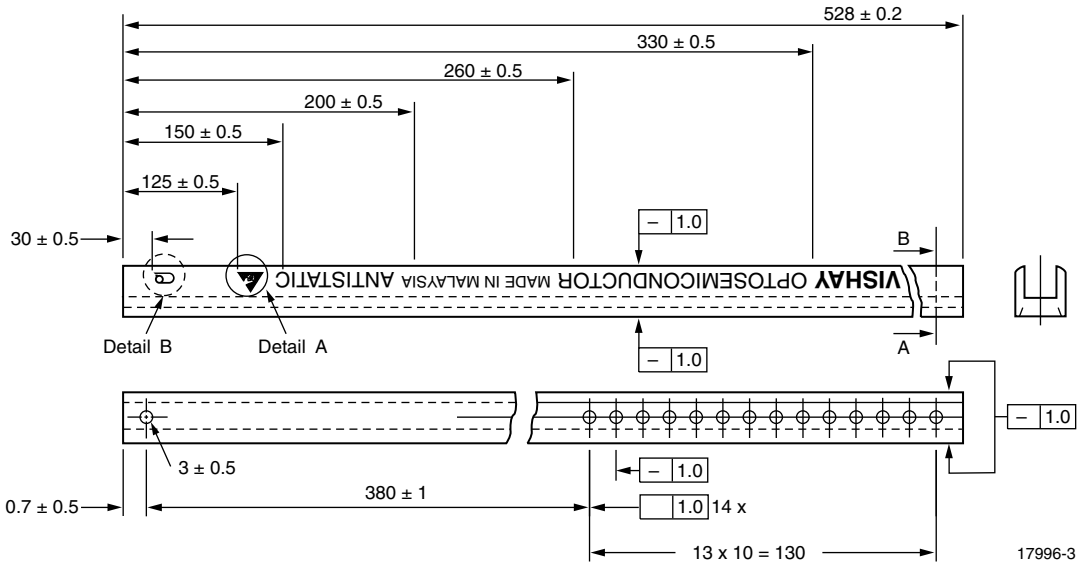

Fig. 13 - Shipping Tube Specifications for DIP-6 Packages

DEVICES PER TUBS			
TYPE	**UNITS/TUBE**	**TUBES/BOX**	**UNITS/BOX**
DIP-6	50	40	2000
DIP-6, option 6	50	40	2000

For technical questions, contact: optocoupleranswers@vishay.com
THIS DOCUMENT IS SUBJECT TO CHANGE WITHOUT NOTICE. THE PRODUCTS DESCRIBED HEREIN AND THIS DOCUMENT ARE SUBJECT TO SPECIFIC DISCLAIMERS, SET FORTH AT www.vishay.com/doc?91000

DIP-6

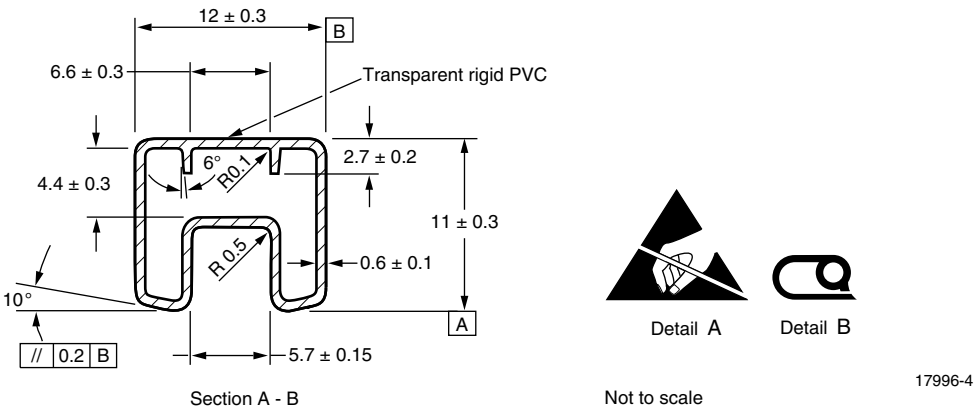

Fig. 14 - Tube Shipping Medium

DIP-6, Option 6

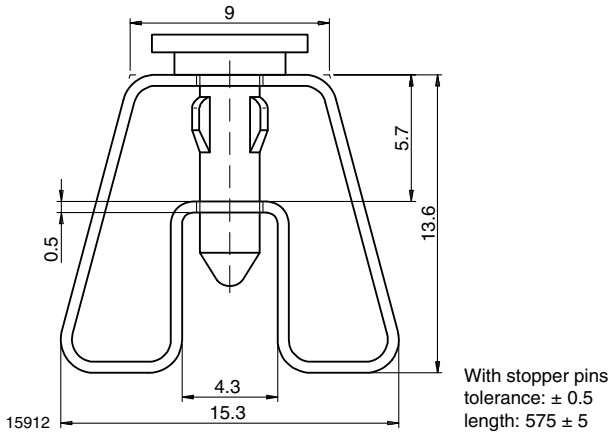

Fig. 15 - Tube Shipping Medium

Tape and Reel

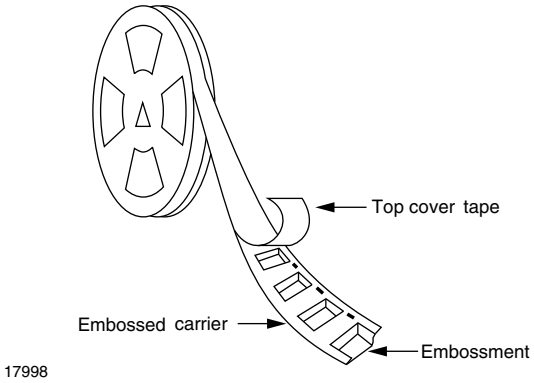

Fig. 16 - Tape and Reel Shipping Medium

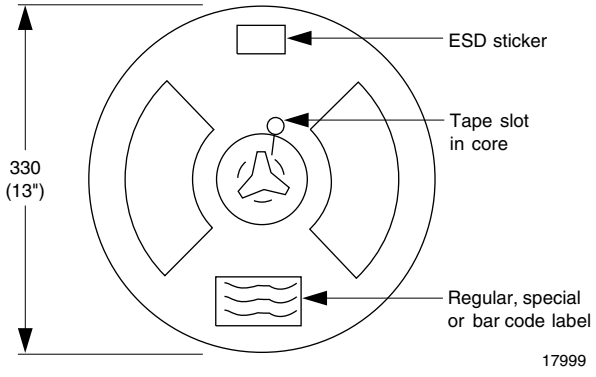

Fig. 17 - Tape and Reel Shipping Medium

For technical questions, contact: optocoupleranswers@vishay.com
THIS DOCUMENT IS SUBJECT TO CHANGE WITHOUT NOTICE. THE PRODUCTS DESCRIBED HEREIN AND THIS DOCUMENT ARE SUBJECT TO SPECIFIC DISCLAIMERS, SET FORTH AT www.vishay.com/doc?91000

SMD-6, Option 7

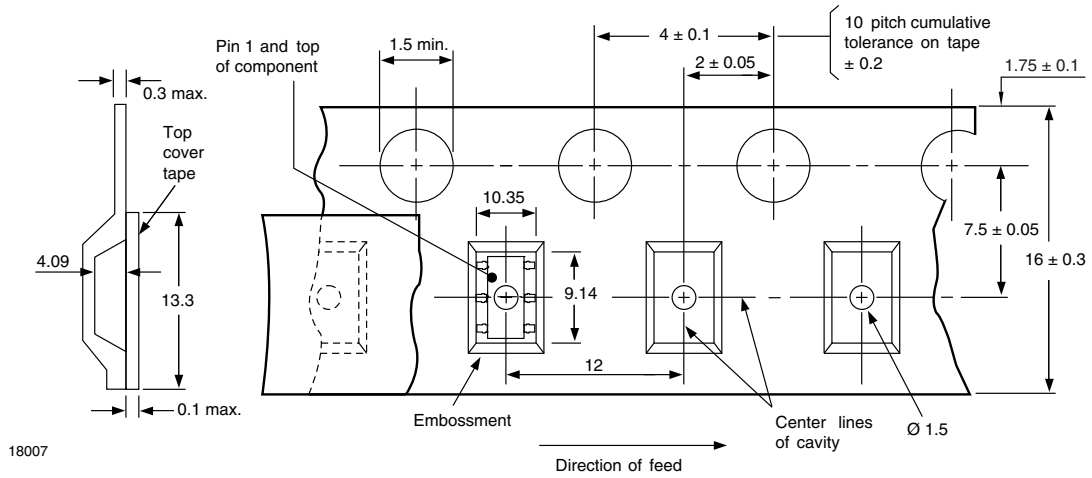

Fig. 18 - Tape and Reel Packing (1000 pieces on reel)

SOLDER PROFILES

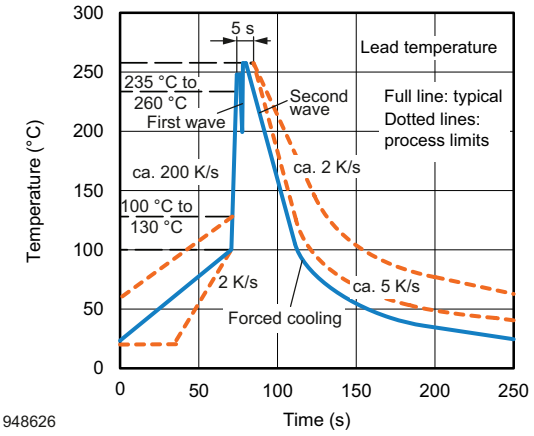

Fig. 19 - Wave Soldering Double Wave Profile According to J-STD-020 for DIP Devices

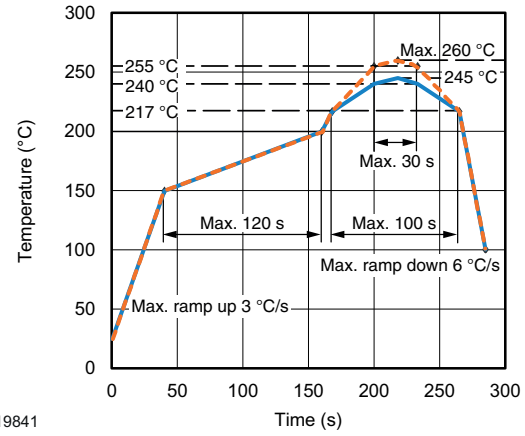

Fig. 20 - Lead (Pb)-free Reflow Solder Profile According to J-STD-020 for SMD Devices

HANDLING AND STORAGE CONDITIONS

ESD level: HBM class 2

Floor life: unlimited

Conditions: T_{amb} < 30 °C, RH < 85 %

Moisture sensitivity level 1, according to J-STD-020

For technical questions, contact: optocoupleranswers@vishay.com
THIS DOCUMENT IS SUBJECT TO CHANGE WITHOUT NOTICE. THE PRODUCTS DESCRIBED HEREIN AND THIS DOCUMENT ARE SUBJECT TO SPECIFIC DISCLAIMERS, SET FORTH AT www.vishay.com/doc?91000

Disclaimer

ALL PRODUCT, PRODUCT SPECIFICATIONS AND DATA ARE SUBJECT TO CHANGE WITHOUT NOTICE TO IMPROVE RELIABILITY, FUNCTION OR DESIGN OR OTHERWISE.

Vishay Intertechnology, Inc., its affiliates, agents, and employees, and all persons acting on its or their behalf (collectively, “Vishay”), disclaim any and all liability for any errors, inaccuracies or incompleteness contained in any datasheet or in any other disclosure relating to any product.

Vishay makes no warranty, representation or guarantee regarding the suitability of the products for any particular purpose or the continuing production of any product. To the maximum extent permitted by applicable law, Vishay disclaims (i) any and all liability arising out of the application or use of any product, (ii) any and all liability, including without limitation special, consequential or incidental damages, and (iii) any and all implied warranties, including warranties of fitness for particular purpose, non-infringement and merchantability.

Statements regarding the suitability of products for certain types of applications are based on Vishay's knowledge of typical requirements that are often placed on Vishay products in generic applications. Such statements are not binding statements about the suitability of products for a particular application. It is the customer's responsibility to validate that a particular product with the properties described in the product specification is suitable for use in a particular application. Parameters provided in datasheets and / or specifications may vary in different applications and performance may vary over time. All operating parameters, including typical parameters, must be validated for each customer application by the customer's technical experts. Product specifications do not expand or otherwise modify Vishay's terms and conditions of purchase, including but not limited to the warranty expressed therein.

Hyperlinks included in this datasheet may direct users to third-party websites. These links are provided as a convenience and for informational purposes only. Inclusion of these hyperlinks does not constitute an endorsement or an approval by Vishay of any of the products, services or opinions of the corporation, organization or individual associated with the third-party website. Vishay disclaims any and all liability and bears no responsibility for the accuracy, legality or content of the third-party website or for that of subsequent links.

Vishay products are not designed for use in life-saving or life-sustaining applications or any application in which the failure of the Vishay product could result in personal injury or death unless specifically qualified in writing by Vishay. Customers using or selling Vishay products not expressly indicated for use in such applications do so at their own risk. Please contact authorized Vishay personnel to obtain written terms and conditions regarding products designed for such applications.

No license, express or implied, by estoppel or otherwise, to any intellectual property rights is granted by this document or by any conduct of Vishay. Product names and markings noted herein may be trademarks of their respective owners.

© 2024 VISHAY INTERTECHNOLOGY, INC. ALL RIGHTS RESERVED

THIS DOCUMENT IS SUBJECT TO CHANGE WITHOUT NOTICE. THE PRODUCTS DESCRIBED HEREIN AND THIS DOCUMENT ARE SUBJECT TO SPECIFIC DISCLAIMERS, SET FORTH AT www.vishay.com/doc?91000