Optocoupler, Low Input Current, Phototransistor Output

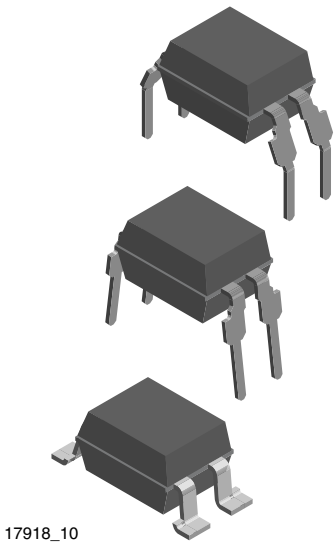

17918_10

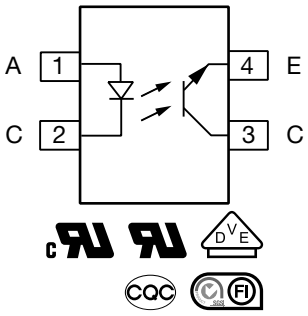

DESCRIPTION

The VO610A consists of a phototransistor optically coupled to a gallium arsenide infrared-emitting diode in a 4 pin plastic dual inline package.

FEATURES

- Temperature range -55 °C to +110 °C
- Rated impulse voltage (transient overvoltage) V_{IOTM} = 6 kV_{peak}
- Isolation test voltage (partial discharge test voltage) V_{pd} = 1.6 kV
- Rated isolation voltage (RMS includes DC) V_{IOWM} = 600 V_{RMS}
- Rated recurring peak voltage (repetitive) V_{IORM} = 850 V_{peak}
- Thickness through insulation ≥ 0.4 mm
- Material categorization: for definitions of compliance please see www.vishay.com/doc?99912

APPLICATIONS

Circuits for safe protective separation against electrical shock according to safety class II (reinforced isolation):

- For appl. class I - IV at mains voltage ≤ 300 V
- For appl. class I - IV at mains voltage ≤ 600 V according to table 1 of IEC 60664-1, suitable for:
  - Switch-mode power supplies
  - Line receiver
  - Computer peripheral interface
  - Microprocessor system interface

AGENCY APPROVALS

(All parts are certified under base model VO610A)

- UL1577
- cUL
- DIN EN 60747-5-5 (VDE 0884-5), available with option 1
- BSI
- CQC

LINKS TO ADDITIONAL RESOURCES

Design Tools | Related Documents | SPICE Models | Footprints | Schematics | 3D Models

For technical questions, contact: optocoupleranswers@vishay.com

THIS DOCUMENT IS SUBJECT TO CHANGE WITHOUT NOTICE. THE PRODUCTS DESCRIBED HEREIN AND THIS DOCUMENT ARE SUBJECT TO SPECIFIC DISCLAIMERS, SET FORTH AT www.vishay.com/doc?91000

ORDERING INFORMATION

V	O	6	1	0	A	-	#	X	0	#	#	T
PART NUMBER							CTR BIN	PACKAGE OPTION				TAPE AND REEL

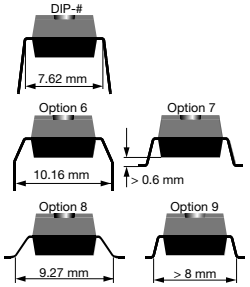

AGENCY CERTIFIED / PACKAGE	CTR (%)			
BSI, FIMKO, UL, cUL	**40 to 80**	**63 to 125**	**100 to 200**	**160 to 320**
DIP-4	VO610A-1	VO610A-2	VO610A-3	-
SMD-4, option 7	-	-	VO610A-3X007T	-
SMD-4, option 8	-	-	VO610A-3X008T	VO610A-4X008T
SMD-4, option 9	-	-	VO610A-3X009T	-
VDE, BSI, FIMKO, UL, cUL	**40 to 80**	**63 to 125**	**100 to 200**	**160 to 320**
DIP-4	-	-	VO610A-3X001	-
DIP-4, 400 mil, option 6	-	-	VO610A-3X016	-
SMD-4, option 7	-	-	-	VO610A-4X017T
SMD-4, option 8	-	-	VO610A-3X018T	-
SMD-4, option 9	VO610A-1X019T	-	VO610A-3X019T	VO610A-4X019T

Note

- Additional options may be possible, please contact sales office

ABSOLUTE MAXIMUM RATINGS (T_{amb} = 25 °C, unless otherwise specified)

PARAMETER	TEST CONDITION	SYMBOL	VALUE	UNIT
INPUT				
Reverse voltage		V_R	6	V
Forward current		I_F	60	mA
Forward surge current	$t_p \leq 10$ µs	I_{FSM}	1.5	A
LED power dissipation	at 25 °C	P_{diss}	100	mW
OUTPUT				
Collector emitter voltage		V_{CEO}	70	V
Emitter collector voltage		V_{ECO}	7	V
Collector current		I_C	50	mA
Collector peak current	$t_p/T = 0.5$, $t_p \leq 10$ ms	I_{CM}	100	mA
Output power dissipation	at 25 °C	P_{diss}	150	mW
COUPLER				
Operating ambient temperature range		T_{amb}	-55 to +110	°C
Storage temperature range		T_{stg}	-55 to +125	°C
Soldering temperature [1]	2 mm from case, ≤ 10 s	T_{sld}	260	°C

Notes

- Stresses in excess of the absolute maximum ratings can cause permanent damage to the device. Functional operation of the device is not implied at these or any other conditions in excess of those given in the operational sections of this document. Exposure to absolute maximum ratings for extended periods of the time can adversely affect reliability.

(1) Refer to reflow profile for soldering conditions for surface mounted parts (SMD), and wave profile for soldering conditions for through hole parts (DIP), please go to “Assembly Instructions” (www.vishay.com/doc?80054).

For technical questions, contact: optocoupleranswers@vishay.com

THIS DOCUMENT IS SUBJECT TO CHANGE WITHOUT NOTICE. THE PRODUCTS DESCRIBED HEREIN AND THIS DOCUMENT ARE SUBJECT TO SPECIFIC DISCLAIMERS, SET FORTH AT www.vishay.com/doc?91000

ELECTRICAL CHARACTERISTICS (T_{amb} = 25 °C, unless otherwise specified)						
PARAMETER	**TEST CONDITION**	**SYMBOL**	**MIN.**	**TYP.**	**MAX.**	**UNIT**
INPUT						
Forward voltage	I_F = 50 mA	V_F	-	1.25	1.6	V
Reverse current	V_R = 6 V	I_R	-	-	100	µA
Junction capacitance	V_R = 0, f = 1 MHz	C_j	-	50	-	pF
OUTPUT						
Collector emitter voltage	I_C = 1 mA	V_{CEO}	70	-	-	V
Emitter collector voltage	I_E = 100 µA	V_{ECO}	7	-	-	V
Collector emitter cut-off current	V_{CE} = 20 V, I_F = 0 A	I_{CEO}	-	10	100	nA
COUPLER						
Collector emitter saturation voltage	I_F = 10 mA, I_C = 1 mA	V_{CEsat}	-	-	0.3	V
Cut-off frequency	V_{CE} = 5 V, I_F = 10 mA, R_L = 100 Ω	f_c	-	110	-	kHz
Coupling capacitance	f = 1 MHz	C_k	-	0.6	-	pF

Note

- Minimum and maximum values are testing requirements. Typical values are characteristics of the device and are the result of engineering evaluation. Typical values are for information only and are not part of the testing requirements.

CURRENT TRANSFER RATIO (T_{amb} = 25 °C, unless otherwise specified)							
PARAMETER	**TEST CONDITION**	**PART**	**SYMBOL**	**MIN.**	**TYP.**	**MAX.**	**UNIT**
I_C/I_F	V_{CE} = 5 V, I_F = 1 mA	VO610A-1	CTR	13	30	-	%
		VO610A-2	CTR	22	45	-	%
		VO610A-3	CTR	34	70	-	%
		VO610A-4	CTR	56	90	-	%
	V_{CE} = 5 V, I_F = 10 mA	VO610A-1	CTR	40	-	80	%
		VO610A-2	CTR	63	-	125	%
		VO610A-3	CTR	100	-	200	%
		VO610A-4	CTR	160	-	320	%

SAFETY AND INSULATION RATINGS				
PARAMETER	**TEST CONDITION**	**SYMBOL**	**VALUE**	**UNIT**
Climatic classification	According to IEC 68 part 1		55/110/21	
Pollution degree	According to DIN VDE 0109		2	
Comparative tracking index	Insulation group IIIa	CTI	175	
Maximum rated withstanding isolation voltage	According to UL1577, t = 1 min	V_{ISO}	5000	V_{RMS}
Maximum transient isolation voltage	According to DIN EN 60747-5-5	V_{IOTM}	6000	V_{peak}
Maximum repetitive peak isolation voltage	According to DIN EN 60747-5-5	V_{IORM}	850	V_{peak}
Isolation resistance	T_{amb} = 25 °C, V_{IO} = 500 V	R_{IO}	≥ 10^{12}	Ω
	T_{amb} = 100 °C, V_{IO} = 500 V	R_{IO}	≥ 10^{11}	Ω
	T_{amb} = T_S, V_{IO} = 500 V	R_{IO}	≥ 10^9	Ω
Output safety power		P_{SO}	265	mW
Input safety current		I_{SI}	130	mA
Input safety temperature		T_S	150	°C
Creepage distance	DIP-4; SMD-4, option 7; SMD-4, option 9		≥ 7.6	mm
Clearance distance			≥ 7.6	mm
Creepage distance	DIP-4, 400 mil, option 6; SMD-4, option 8		≥ 8	mm
Clearance distance			≥ 8	mm
Insulation thickness		DTI	≥ 0.4	mm

Note

- According to DIN EN 60747-5-5 (VDE 0884), § 7.4.3.8.2 (see Fig. 2). This optocoupler is suitable for safe electrical isolation only within the safety ratings. Compliance with the safety ratings shall be ensured by means of suitable protective circuits.

For technical questions, contact: optocoupleranswers@vishay.com
THIS DOCUMENT IS SUBJECT TO CHANGE WITHOUT NOTICE. THE PRODUCTS DESCRIBED HEREIN AND THIS DOCUMENT ARE SUBJECT TO SPECIFIC DISCLAIMERS, SET FORTH AT www.vishay.com/doc?91000

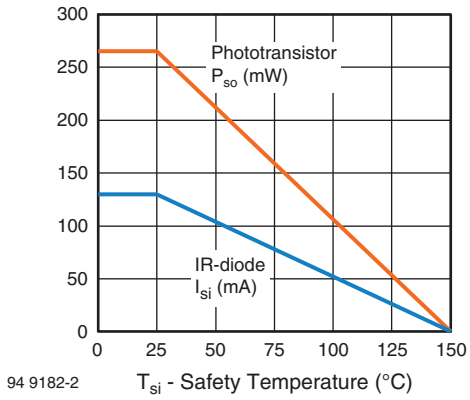

Fig. 1 - Derating Diagram

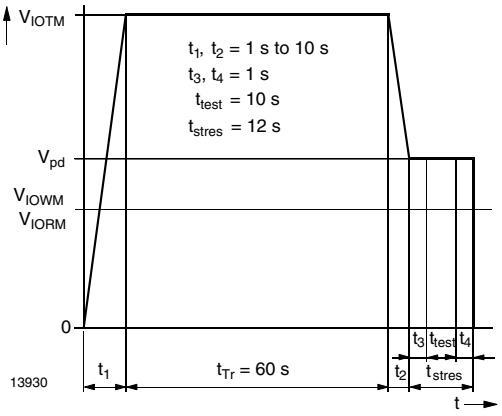

Fig. 2 - Test Pulse Diagram for Sample Test according to DIN EN 60747-5-5 (VDE0884), IEC 60747

SWITCHING CHARACTERISTICS (T_{amb} = 25 °C, unless otherwise specified)

PARAMETER	TEST CONDITION	SYMBOL	MIN.	TYP.	MAX.	UNIT
Delay time	V_S = 5 V, I_C = 2 mA, R_L = 100 Ω, (see Fig. 3)	t_d	-	3	-	µs
Rise time	V_S = 5 V, I_C = 2 mA, R_L = 100 Ω, (see Fig. 3)	t_r	-	3	-	µs
Fall time	V_S = 5 V, I_C = 2 mA, R_L = 100 Ω, (see Fig. 3)	t_f	-	4.7	-	µs
Storage time	V_S = 5 V, I_C = 2 mA, R_L = 100 Ω, (see Fig. 3)	t_s	-	0.3	-	µs
Turn-on time	V_S = 5 V, I_C = 2 mA, R_L = 100 Ω, (see Fig. 3)	t_{on}	-	6	-	µs
Turn-off time	V_S = 5 V, I_C = 2 mA, R_L = 100 Ω, (see Fig. 3)	t_{off}	-	5	-	µs
Turn-on time	V_S = 5 V, I_F = 10 mA, R_L = 1 kΩ, (see Fig. 4)	t_{on}	-	9	-	µs
Turn-off time	V_S = 5 V, I_F = 10 mA, R_L = 1 kΩ, (see Fig. 4)	t_{off}	-	10	-	µs

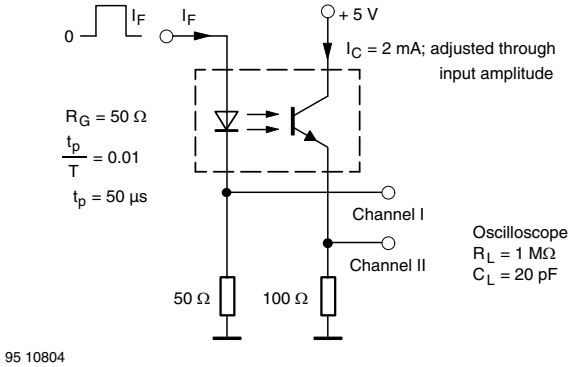

Fig. 3 - Test Circuit, Non-Saturated Operation

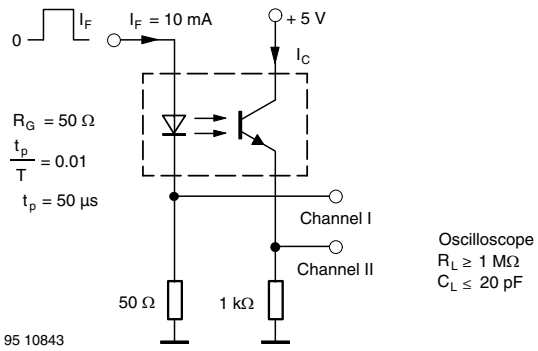

Fig. 4 - Test Circuit, Saturated Operation

For technical questions, contact: optocoupleranswers@vishay.com
THIS DOCUMENT IS SUBJECT TO CHANGE WITHOUT NOTICE. THE PRODUCTS DESCRIBED HEREIN AND THIS DOCUMENT ARE SUBJECT TO SPECIFIC DISCLAIMERS, SET FORTH AT www.vishay.com/doc?91000

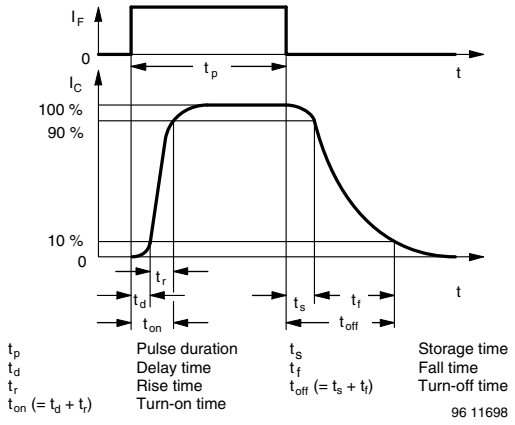

Fig. 5 - Switching Times

TYPICAL CHARACTERISTICS (T_{amb} = 25 °C, unless otherwise specified)

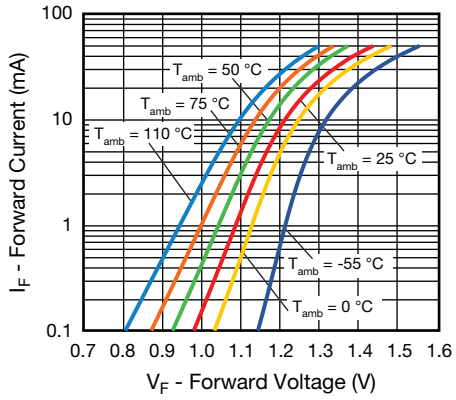

Fig. 6 - Forward Current vs. Forward Voltage

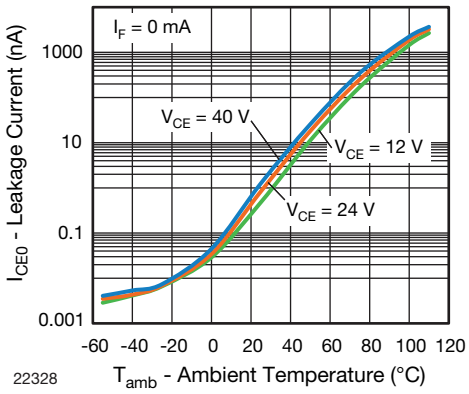

Fig. 8 - Leakage Current vs. Ambient Temperature

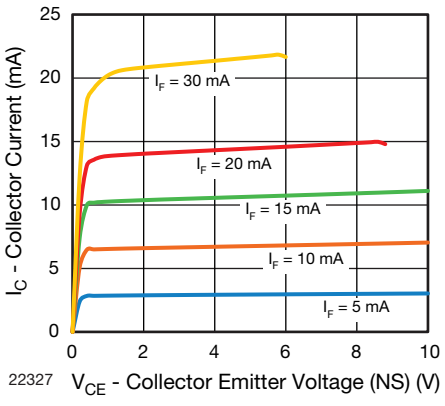

Fig. 7 - Collector Current vs. Collector Emitter Voltage (non-saturated)

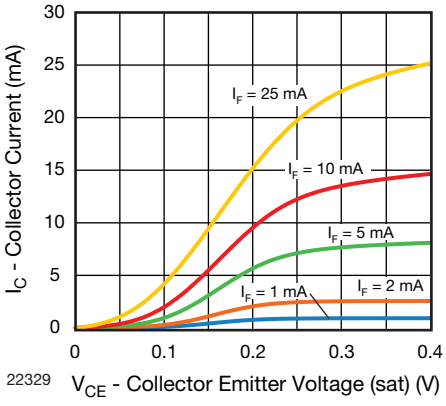

Fig. 9 - Collector Current vs. Collector Emitter Voltage (saturated)

For technical questions, contact: optocoupleranswers@vishay.com
THIS DOCUMENT IS SUBJECT TO CHANGE WITHOUT NOTICE. THE PRODUCTS DESCRIBED HEREIN AND THIS DOCUMENT ARE SUBJECT TO SPECIFIC DISCLAIMERS, SET FORTH AT www.vishay.com/doc?91000

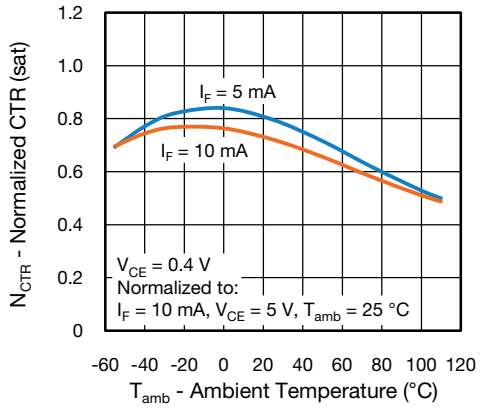

Fig. 10 - Normalized CTR (saturated) vs. Ambient Temperature

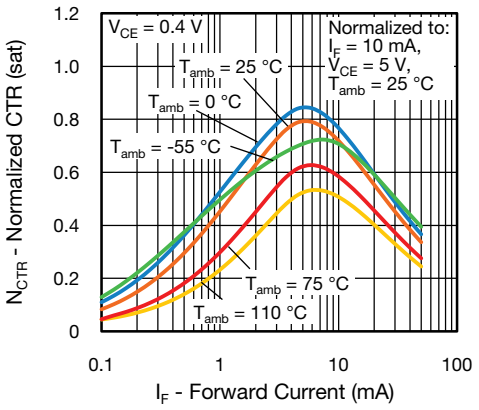

Fig. 13 - Normalized CTR (saturated) vs. Forward Current

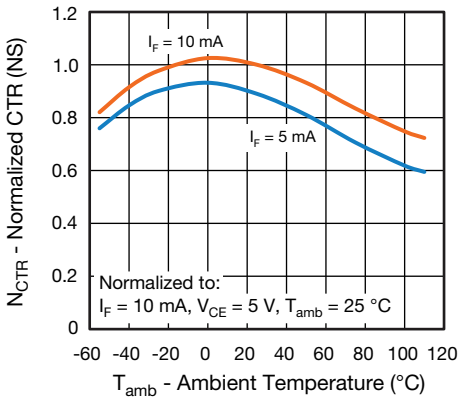

Fig. 11 - Normalized CTR (non-saturated) vs. Ambient Temperature

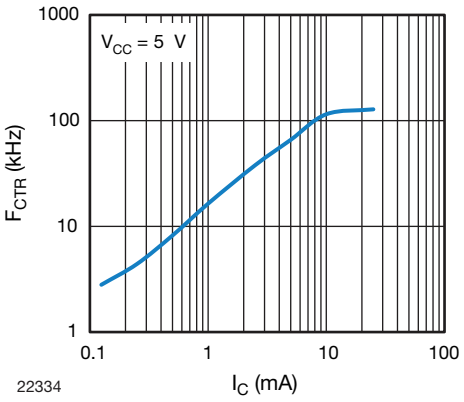

Fig. 14 - F_{CTR} vs. I_C (saturated) (mA)

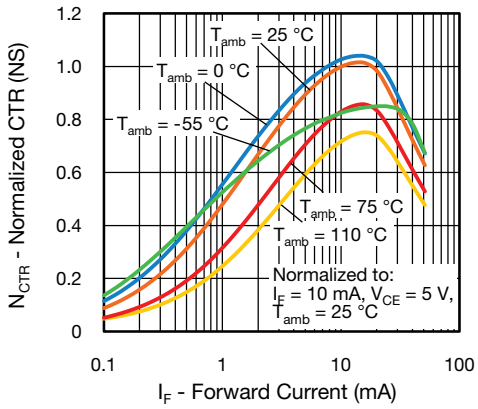

Fig. 12 - Normalized CTR (non-saturated) vs. Forward Current

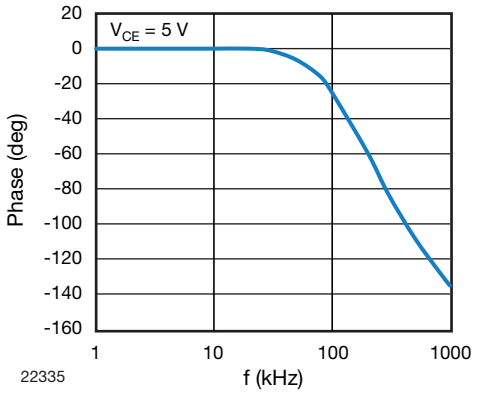

Fig. 15 - Phase Angle vs. Frequency

For technical questions, contact: optocoupleranswers@vishay.com
THIS DOCUMENT IS SUBJECT TO CHANGE WITHOUT NOTICE. THE PRODUCTS DESCRIBED HEREIN AND THIS DOCUMENT ARE SUBJECT TO SPECIFIC DISCLAIMERS, SET FORTH AT www.vishay.com/doc?91000

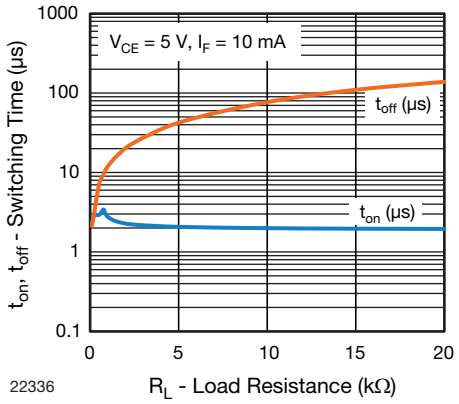

Fig. 16 - Switching Time vs. Load Resistance

PACKAGE DIMENSIONS in millimeters

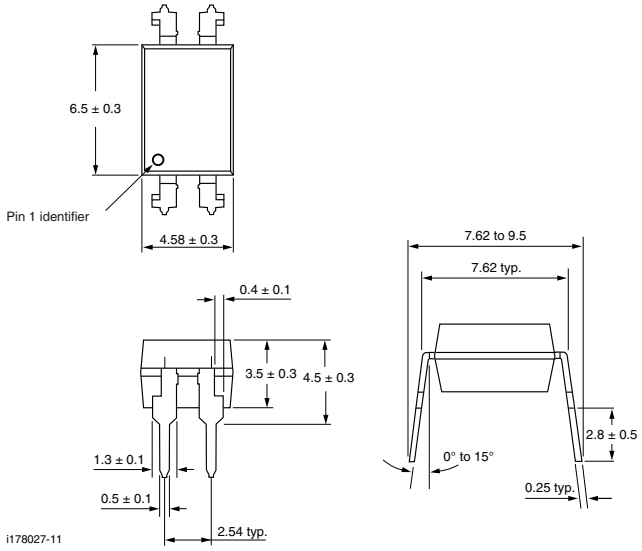

Option 6

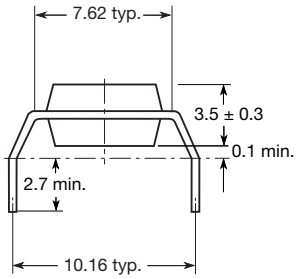

Option 7

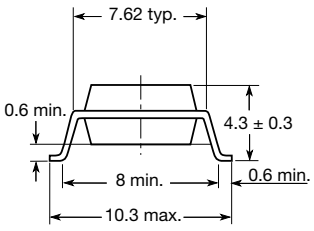

Option 8

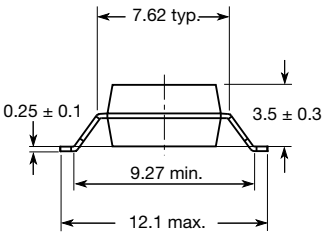

Option 9

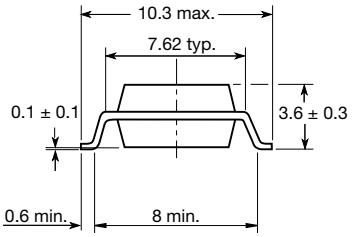

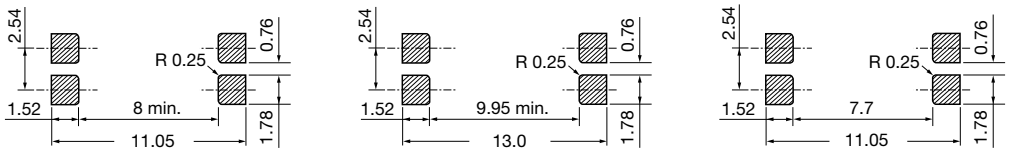

For technical questions, contact: optocoupleranswers@vishay.com
THIS DOCUMENT IS SUBJECT TO CHANGE WITHOUT NOTICE. THE PRODUCTS DESCRIBED HEREIN AND THIS DOCUMENT ARE SUBJECT TO SPECIFIC DISCLAIMERS, SET FORTH AT www.vishay.com/doc?91000

PACKAGE MARKING (Example of VO617A-3X018T)

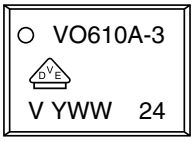

Notes

- Only options 1, 7, and 8 are reflected in the package marking.
- The VDE logo is only printed on option 1 parts.
- Tape and reel suffix (T) is not part of the package marking.

PACKING INFORMATION

DEVICE PER TUBE			
TYPE	**UNITS/TUBE**	**TUBES/BOX**	**UNITS/BOX**
DIP-4, standard and option 6	100	40	4000

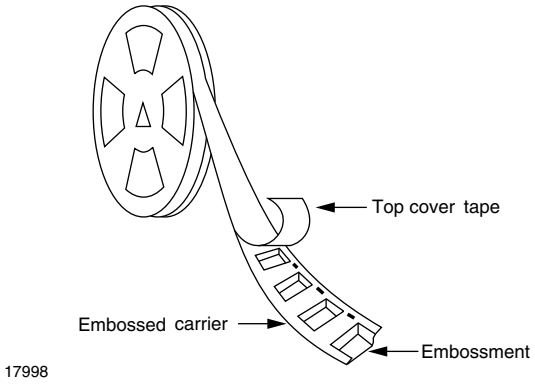

Fig. 17 - Tape and Reel Shipping Medium

For technical questions, contact: optocoupleranswers@vishay.com
THIS DOCUMENT IS SUBJECT TO CHANGE WITHOUT NOTICE. THE PRODUCTS DESCRIBED HEREIN AND THIS DOCUMENT ARE SUBJECT TO SPECIFIC DISCLAIMERS, SET FORTH AT www.vishay.com/doc?91000

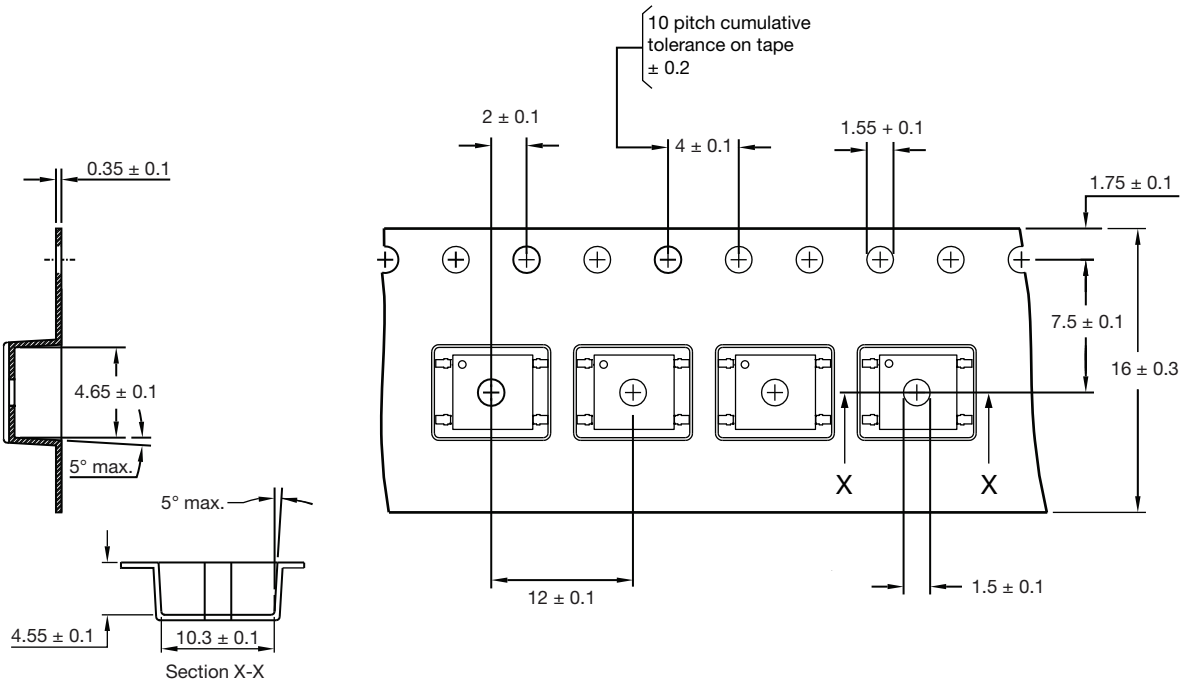

Fig. 18 - Tape and Reel Packing for Option 7 and Option 9
(1000 units per reel)

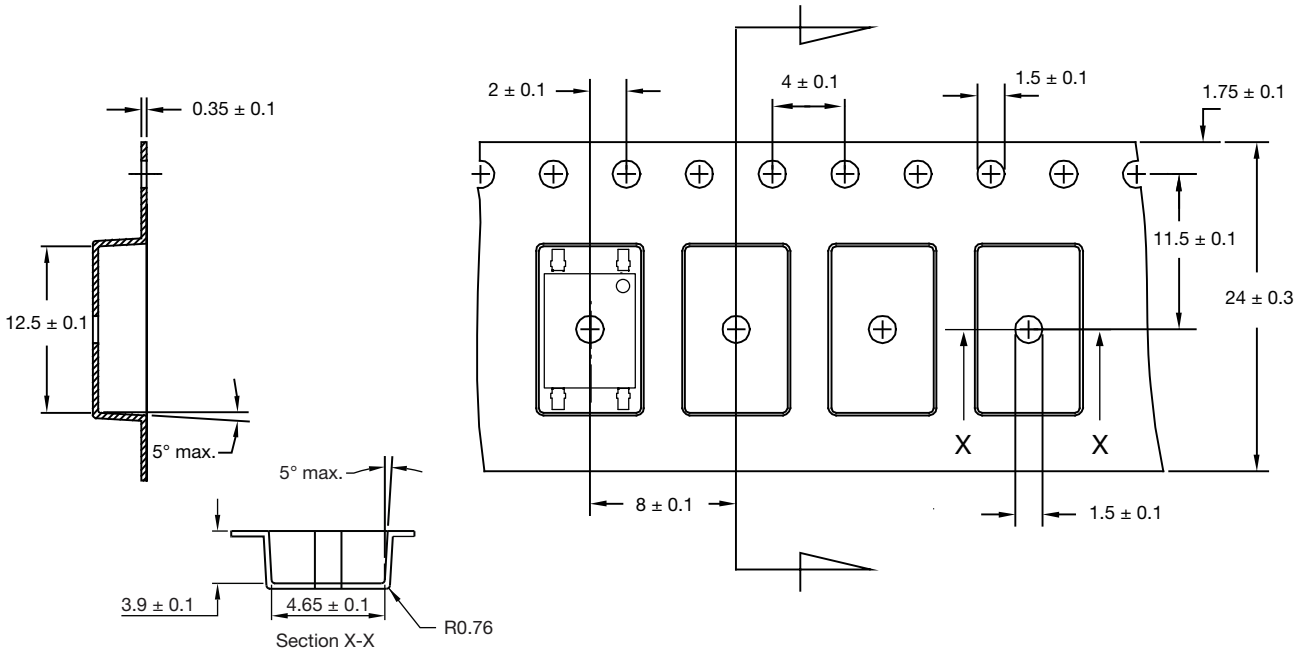

Fig. 19 - Tape and Reel Packing for Option 8
(2000 units per reel)

For technical questions, contact: optocoupleranswers@vishay.com
THIS DOCUMENT IS SUBJECT TO CHANGE WITHOUT NOTICE. THE PRODUCTS DESCRIBED HEREIN AND THIS DOCUMENT ARE SUBJECT TO SPECIFIC DISCLAIMERS, SET FORTH AT www.vishay.com/doc?91000

Disclaimer

ALL PRODUCT, PRODUCT SPECIFICATIONS AND DATA ARE SUBJECT TO CHANGE WITHOUT NOTICE TO IMPROVE RELIABILITY, FUNCTION OR DESIGN OR OTHERWISE.

Vishay Intertechnology, Inc., its affiliates, agents, and employees, and all persons acting on its or their behalf (collectively, “Vishay”), disclaim any and all liability for any errors, inaccuracies or incompleteness contained in any datasheet or in any other disclosure relating to any product.

Vishay makes no warranty, representation or guarantee regarding the suitability of the products for any particular purpose or the continuing production of any product. To the maximum extent permitted by applicable law, Vishay disclaims (i) any and all liability arising out of the application or use of any product, (ii) any and all liability, including without limitation special, consequential or incidental damages, and (iii) any and all implied warranties, including warranties of fitness for particular purpose, non-infringement and merchantability.

Statements regarding the suitability of products for certain types of applications are based on Vishay's knowledge of typical requirements that are often placed on Vishay products in generic applications. Such statements are not binding statements about the suitability of products for a particular application. It is the customer's responsibility to validate that a particular product with the properties described in the product specification is suitable for use in a particular application. Parameters provided in datasheets and / or specifications may vary in different applications and performance may vary over time. All operating parameters, including typical parameters, must be validated for each customer application by the customer's technical experts. Product specifications do not expand or otherwise modify Vishay's terms and conditions of purchase, including but not limited to the warranty expressed therein.

Hyperlinks included in this datasheet may direct users to third-party websites. These links are provided as a convenience and for informational purposes only. Inclusion of these hyperlinks does not constitute an endorsement or an approval by Vishay of any of the products, services or opinions of the corporation, organization or individual associated with the third-party website. Vishay disclaims any and all liability and bears no responsibility for the accuracy, legality or content of the third-party website or for that of subsequent links.

Vishay products are not designed for use in life-saving or life-sustaining applications or any application in which the failure of the Vishay product could result in personal injury or death unless specifically qualified in writing by Vishay. Customers using or selling Vishay products not expressly indicated for use in such applications do so at their own risk. Please contact authorized Vishay personnel to obtain written terms and conditions regarding products designed for such applications.

No license, express or implied, by estoppel or otherwise, to any intellectual property rights is granted by this document or by any conduct of Vishay. Product names and markings noted herein may be trademarks of their respective owners.

© 2024 VISHAY INTERTECHNOLOGY, INC. ALL RIGHTS RESERVED

THIS DOCUMENT IS SUBJECT TO CHANGE WITHOUT NOTICE. THE PRODUCTS DESCRIBED HEREIN AND THIS DOCUMENT ARE SUBJECT TO SPECIFIC DISCLAIMERS, SET FORTH AT www.vishay.com/doc?91000