2.5 A Output Current IGBT and MOSFET Driver

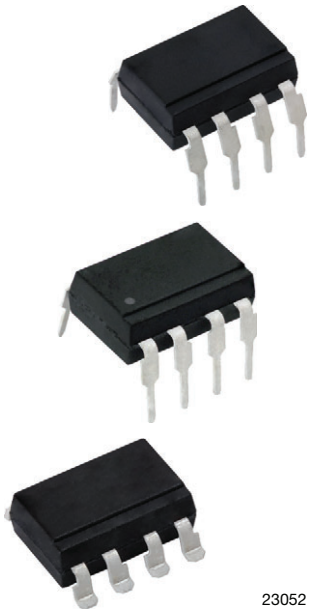

23052

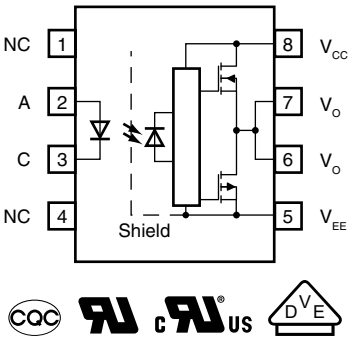

DESCRIPTION

The VOD3120A consists of a AlGaAs LED optically coupled to an integrated circuit with a power output stage. This optocoupler is ideally suited for driving power IGBTs and MOSFETs used in motor control inverter applications. The high operating voltage range of the output stage provides the drive voltages required by gate controlled devices. The VOD3120A is ideally suited for directly driving IGBTs with ratings up to 1200 V / 100 A. For IGBTs with higher ratings, the VOD3120A can be used to drive a discrete power stage which drives the IGBT gate.

FEATURES

- 2.5 A minimum peak output current
- Rail-to-rail output stage
- 50 kV/µs common mode rejection ratio
- Wide operating range of 15 V to 30 V
- Industrial temperature range of -40 °C to +105 °C
- Material categorization: for definitions of compliance please see www.vishay.com/doc?99912

Pb-free

e3

RoHS COMPLIANT

APPLICATIONS

- Isolated IGBT / MOSFET gate driver
- AC and brushless DC motor drives
- Induction stove top
- Industrial inverters
- Uninterruptible power supplies (UPS)

AGENCY APPROVALS

- UL 1577
- cUL
- DIN EN 60747-5-5 (VDE 0884) and reinforced insulation rating available with option “V”
- CQC

LINKS TO ADDITIONAL RESOURCES

3D Models | Design Tools | Related Documents | Evaluation Boards

For technical questions within your region: optocoupleranswers@vishay.com, ,

THIS DOCUMENT IS SUBJECT TO CHANGE WITHOUT NOTICE. THE PRODUCTS DESCRIBED HEREIN AND THIS DOCUMENT ARE SUBJECT TO SPECIFIC DISCLAIMERS, SET FORTH AT www.vishay.com/doc?91000

ORDERING INFORMATION

V	O	D	3	1	2	0	A	#	-	V	T	#
PART NUMBER								PACKAGE OPTION		VDE OPTION	TAPE AND REEL	

AGENCY CERTIFIED / PACKAGE	CMR (kV/µs)
UL, cUL, CQC	**35**
DIP-8	VOD3120AD
DIP-8, 400 mil	VOD3120AG
SMD-8	VOD3120AB-T
SMD-8, 180° orientation	VOD3120AB-T2
VDE, UL, cUL, CQC	**35**
DIP-8	VOD3120AD-V
DIP-8, 400 mil	VOD3120AG-V
SMD-8	VOD3120AB-VT
SMD-8, 180° orientation	VOD3120AB-VT2

TRUTH TABLE

LED	HIGH SIDE	LOW SIDE	V_O
Off	Off	On	Low
On	On	Off	High

ABSOLUTE MAXIMUM RATINGS (T_{amb} = 25 °C, unless otherwise specified)

PARAMETER	TEST CONDITION	SYMBOL	VALUE	UNIT
INPUT				
Forward current		I_F	20	mA
Peak transient input current	≤ 1 µs pulse width, 300 pps	$I_{F(TRAN)}$	1	A
Reverse input voltage		V_R	5	V
Input current (rise / fall time) (1)		$t_{r(in)}$ / $t_{f(in)}$	500	ns
Output power dissipation		P_{diss}	45	mW
OUTPUT				
High peak output current (2)		$I_{OH(PEAK)}$	2.5	A
Low peak output current (2)		$I_{OL(PEAK)}$	2.5	A
Supply voltage		(V_{CC} - V_{EE})	0 to +35	V
Output voltage		$V_{O(PEAK)}$	35	V
Output power dissipation		P_{diss}	250	mW
Junction temperature		T_j	125	°C
OPTOCOUPLER				
Storage temperature range		T_S	-55 to +125	°C
Ambient operating temperature range		T_{amb}	-40 to +105	°C
Total power dissipation		P_{tot}	295	mW
Soldering temperature		T_{sld}	260	°C

Notes

- Stresses in excess of the absolute maximum ratings can cause permanent damage to the device. Functional operation of the device is not implied at these or any other conditions in excess of those given in the operational sections of this document. Exposure to absolute maximum ratings for extended periods of the time can adversely affect reliability

(1) The rise and fall times of the forward current should be less than 500 ns

(2) Exponential waveform, pulse width ≤ 0.3 µs, f ≤ 15 kHz

For technical questions within your region: optocoupleranswers@vishay.com, ,
THIS DOCUMENT IS SUBJECT TO CHANGE WITHOUT NOTICE. THE PRODUCTS DESCRIBED HEREIN AND THIS DOCUMENT ARE SUBJECT TO SPECIFIC DISCLAIMERS, SET FORTH AT www.vishay.com/doc?91000

RECOMMENDED OPERATING CONDITION				
PARAMETER	**SYMBOL**	**MIN.**	**MAX.**	**UNIT**
Operating temperature	T_{amb}	-40	+105	°C
Power supply voltage	V_{CC} - V_{EE}	15	30	V
Forward current (V_O in “high” state)	$I_{F(ON)}$	7	16	mA
Forward voltage (V_O in “low” state)	$V_{F(OFF)}$	0	0.8	V

ELECTRICAL CHARACTERISTICS (T_{amb} = 25 °C, unless otherwise specified)						
PARAMETER	**TEST CONDITION**	**SYMBOL**	**MIN.**	**TYP.**	**MAX.**	**UNIT**
INPUT						
Forward voltage	I_F = 10 mA	V_F	1.2	1.37	1.8	V
Temperature coefficient of forward voltage	I_F = 10 mA	$\Delta V_F/\Delta T$	-	-1.237	-	mV/°C
Reverse breakdown voltage	I_R = 10 µA	BV_R	5	-	-	V
Threshold forward current (V_O from “low” to “high”)	V_{CC} = 30 V, V_O < 5 V	I_{FLH}	-	1.8	5	mA
Threshold forward voltage (V_O from “high” to “low”)	V_{CC} = 30 V, V_O > 5 V	V_{FLH}	0.8	-	-	V
Input capacitance	f = 1 MHz, V_F = 0 V	C_{IN}	-	33	-	pF
OUTPUT						
High level supply current	I_F = 10 mA, V_{CC} = 30 V, V_O = open	I_{CCH}	-	1.7	3.0	mA
Low level supply current	I_F = 0 mA, V_{CC} = 30 V, V_O = open	I_{CCL}	-	2.0	3.0	mA
High level output current	V_O = (V_{CC} - 1.5 V)	I_{OH} (1)	-	-	-1.0	A
	V_O = (V_{CC} - 4 V)	I_{OH} (2)	-	-	-2.5	A
Low level output current	V_O = (V_{EE} + 1.5 V)	I_{OL} (1)	1.0	-	-	A
	V_O = (V_{EE} + 4 V)	I_{OL} (2)	2.5	-	-	A
High level output voltage	I_F = 10 mA, I_O = -100 mA	V_{OH}	V_{CC} - 0.3 V	V_{CC} - 0.1 V	-	V
Low level output voltage	I_F = 0 mA, I_O = 100 mA	V_{OL}	-	V_{EE} + 0.1 V	V_{EE} + 0.25 V	V
UVLO threshold	V_O > 5 V, I_F = 10 mA	V_{UVLO+}	11.0	12.7	13.5	V
	V_O < 5 V, I_F = 10 mA	V_{UVLO-}	9.5	11.2	12.0	V
UVLO hysteresis		$UVLO_{HYS}$	-	1.5	-	V
COUPLER						
Coupling capacitance	f = 1 MHz	C_{IO}	-	0.92	-	pF

Notes

- All typical values at T_{amb} = 25°C and V_{CC} - V_{EE} = 30 V, unless otherwise specified; all minimum and maximum specifications are at recommended operating condition

(1) Maximum pulse width = 50 µs

(2) Maximum pulse width = 10 µs

For technical questions within your region: optocoupleranswers@vishay.com, ,

THIS DOCUMENT IS SUBJECT TO CHANGE WITHOUT NOTICE. THE PRODUCTS DESCRIBED HEREIN AND THIS DOCUMENT ARE SUBJECT TO SPECIFIC DISCLAIMERS, SET FORTH AT www.vishay.com/doc?91000

TEST CIRCUITS

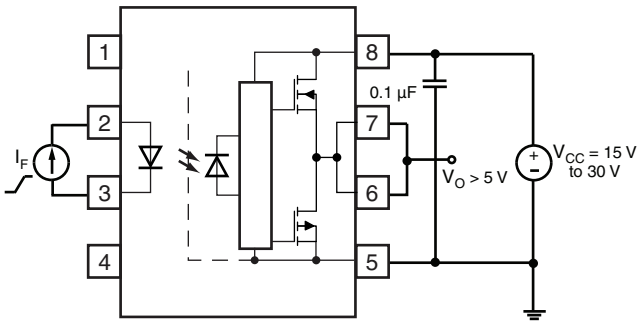

Fig. 1 - I_{FLH} Test Circuit

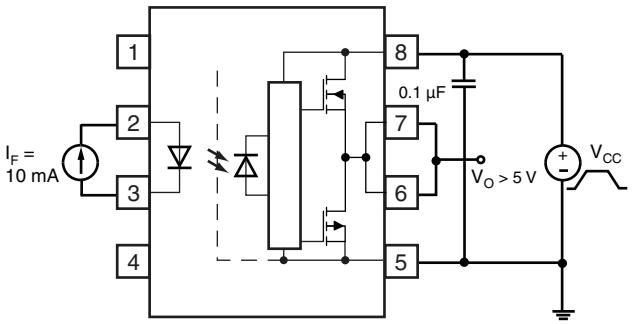

Fig. 2 - UVLO Test Circuit

SWITCHING CHARACTERISTICS (T_{amb} = 25 °C, V_{CC} - V_{EE} = 30 V unless otherwise specified)						
PARAMETER	**TEST CONDITION**	**SYMBOL**	**MIN.**	**TYP.**	**MAX.**	**UNIT**
Propagation delay time to V_O = "low"	R_g = 10 Ω, C_g = 25 nF, f = 10 kHz, duty cycle = 50 %, I_F = 7 mA to 16 mA, V_{CC} = 10 V to 30 V, V_{EE} = ground	t_{PHL}	0.05	0.13	0.5	µs
Propagation delay time to V_O = "high"		t_{PLH}	0.05	0.13	0.5	µs
Pulse width distortion		PWD	-	0.005	0.07	µs
Propagation delay difference (1)		PDD	-0.1	-	0.1	µs
Output rise time (10 % to 90 %)		t_r	-	0.035	-	µs
Output fall time (90 % to 10 %)		t_f	-	0.035	-	µs

Note

(1) The difference between t_{PHL} and t_{PLH} between any two parts, series parts, or channels under same test conditions

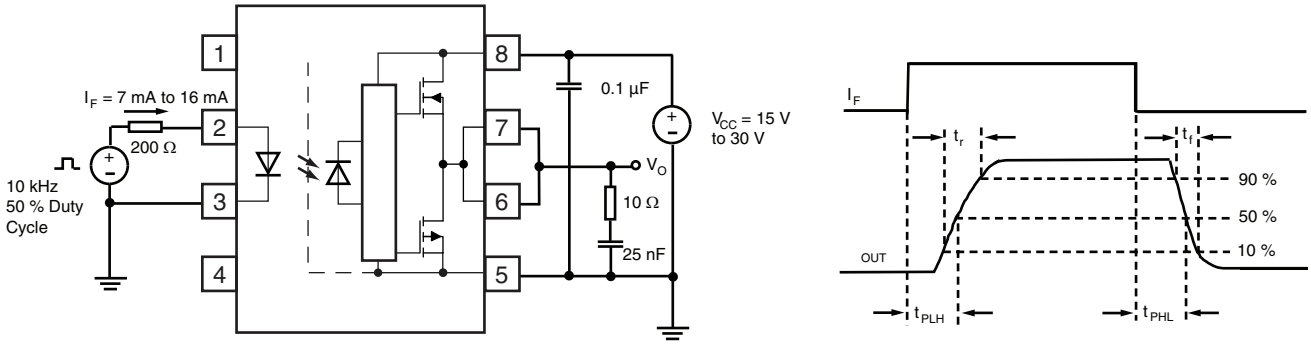

Fig. 3 - t_{PLH}, t_{PHL}, t_r and t_f Test Circuit and Waveforms

COMMON MODE TRANSIENT IMMUNITY (T_{amb} = 25 °C, V_{CC} - V_{EE} = 30 V unless otherwise specified)						
PARAMETER	**TEST CONDITION**	**SYMBOL**	**MIN.**	**TYP.**	**MAX.**	**UNIT**
Common mode transient immunity at high level output (V_O = "high") (1)	I_F = 10 mA to 16 mA, V_{CM} = 1500 V, V_{CC} = 30 V	$\|CM_H\|$	35	50	-	kV/µs
Common mode transient immunity at low level output (V_O = "low") (2)	V_F = 0 V, V_{CM} = 1500 V, V_{CC} = 30 V	$\|CM_L\|$	35	50	-	kV/µs

Notes

(1) CM_H is the maximum rate of rise of the common mode voltage that can be sustained with the output voltage in the logic high state (V_O > 15 V)

(2) CM_L is the maximum rate of fall of the common mode voltage that can be sustained with the output voltage in the logic low state (V_O < 1 V)

For technical questions within your region: optocoupleranswers@vishay.com, ,
THIS DOCUMENT IS SUBJECT TO CHANGE WITHOUT NOTICE. THE PRODUCTS DESCRIBED HEREIN AND THIS DOCUMENT ARE SUBJECT TO SPECIFIC DISCLAIMERS, SET FORTH AT www.vishay.com/doc?91000

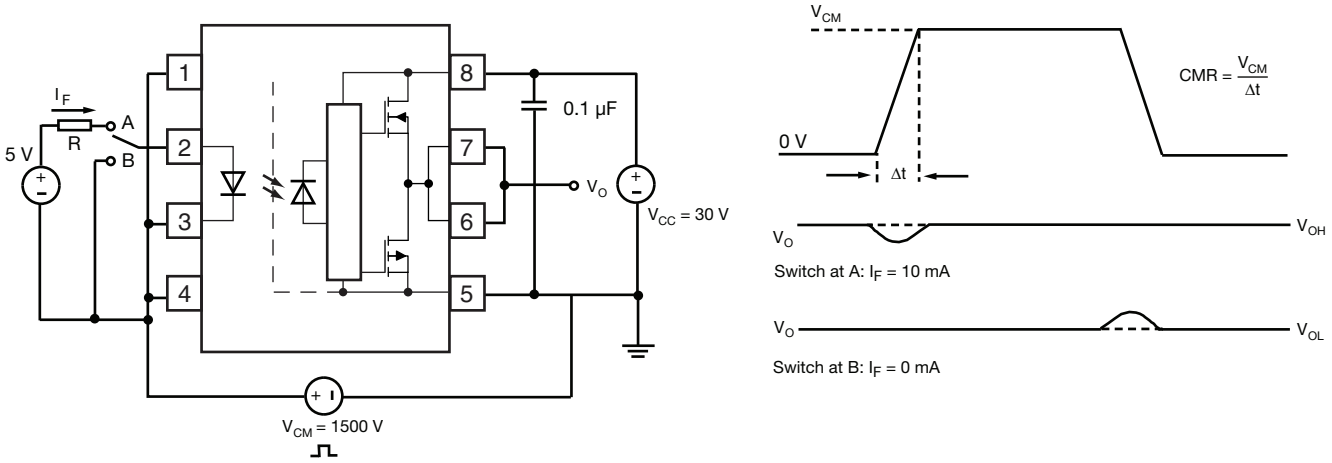

Fig. 4 - CMR Test Circuit and Waveforms

SAFETY AND INSULATION RATINGS (T_{amb} = 25 °C, unless otherwise specified)				
PARAMETER	**TEST CONDITION**	**SYMBOL**	**VALUE**	**UNIT**
Comparative tracking index	Insulation group IIIa	CTI	175	
Maximum rated withstanding isolation voltage	According to UL1577, t = 1 min	V_{ISO}	5300	V_{RMS}
Maximum transient isolation voltage	According to DIN EN 60747-5-5	V_{IOTM}	6000	V_{peak}
Maximum repetitive peak isolation voltage	According to DIN EN 60747-5-5	V_{IORM}	891	V_{peak}
Isolation resistance	T_{amb} = 25 °C, V_{IO} = 500 V	R_{IO}	10^{12}	Ω
	T_{amb} = 100 °C, V_{IO} = 500 V	R_{IO}	10^{11}	Ω
Output safety power		P_{SO}	250	mW
Input safety current		I_{SI}	25	mA
Input safety temperature		T_S	175	°C
Creepage distance	DIP-8, SMD-8		> 7	mm
Clearance distance			> 7	mm
Creepage distance	DIP-8, 400 mil		> 8	mm
Clearance distance			> 8	mm
Insulation thickness		DTI	> 0.4	mm

Note

- As per IEC 60747-5-2, §7.4.3.8.1, this optocoupler is reinforced rated and suitable for “safe electrical insulation” only within the safety ratings. Compliance with the safety ratings shall be ensured by means of protective circuits

For technical questions within your region: optocoupleranswers@vishay.com, ,
THIS DOCUMENT IS SUBJECT TO CHANGE WITHOUT NOTICE. THE PRODUCTS DESCRIBED HEREIN AND THIS DOCUMENT ARE SUBJECT TO SPECIFIC DISCLAIMERS, SET FORTH AT www.vishay.com/doc?91000

TYPICAL CHARACTERISTICS (T_{amb} = 25 °C, unless otherwise specified)

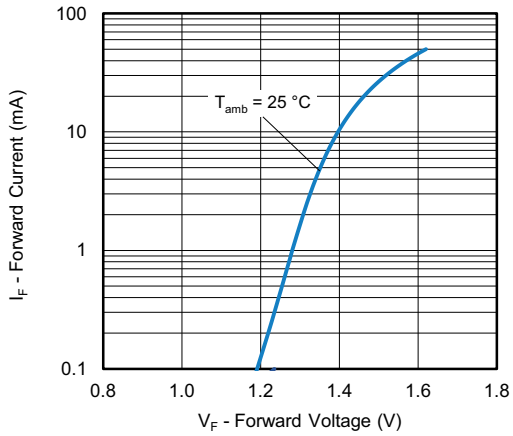

Fig. 5 - Forward Current vs. Forward Voltage

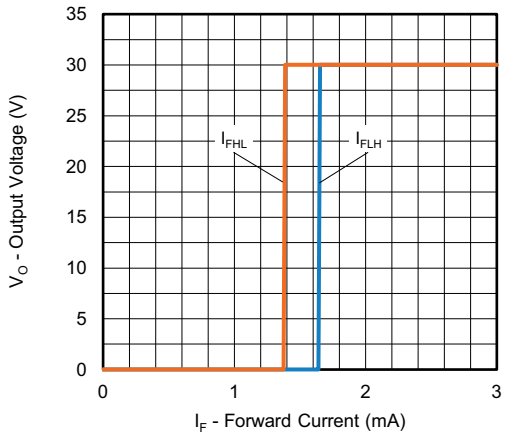

Fig. 6 - Output Voltage vs. Forward Current

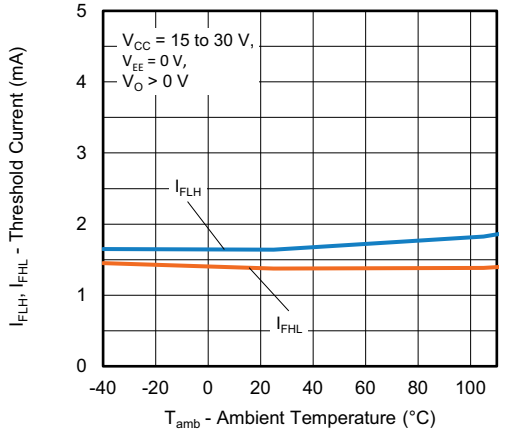

Fig. 7 - Threshold Current vs. Ambient Temperature

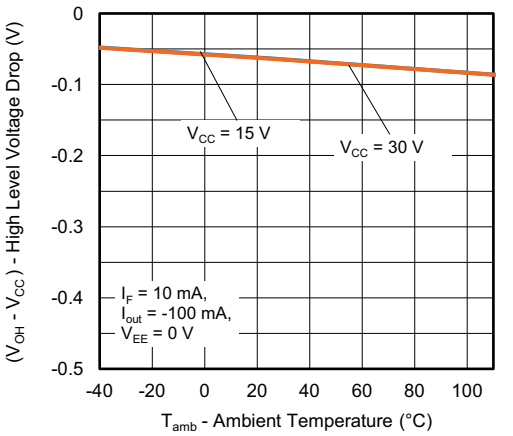

Fig. 8 - High Level Voltage Drop vs. Ambient Temperature

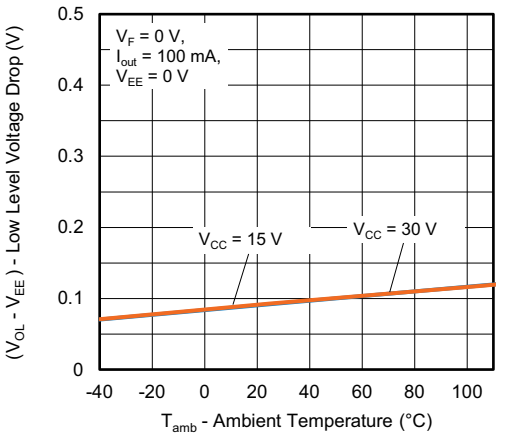

Fig. 9 - Low Level Voltage Drop vs. Ambient Temperature

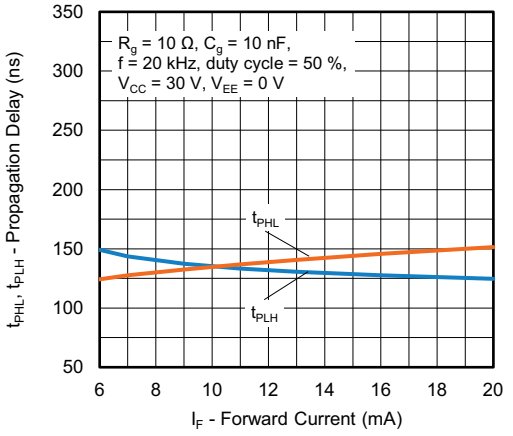

Fig. 10 - Propagation Delay vs. Forward Current

For technical questions within your region: optocoupleranswers@vishay.com, ,
THIS DOCUMENT IS SUBJECT TO CHANGE WITHOUT NOTICE. THE PRODUCTS DESCRIBED HEREIN AND THIS DOCUMENT ARE SUBJECT TO SPECIFIC DISCLAIMERS, SET FORTH AT www.vishay.com/doc?91000

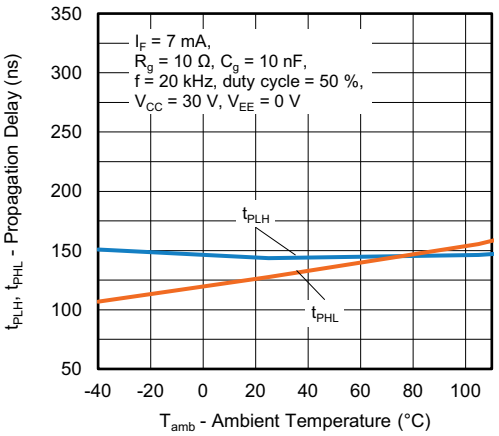

Fig. 11 - Propagation Delay vs. Ambient Temperature

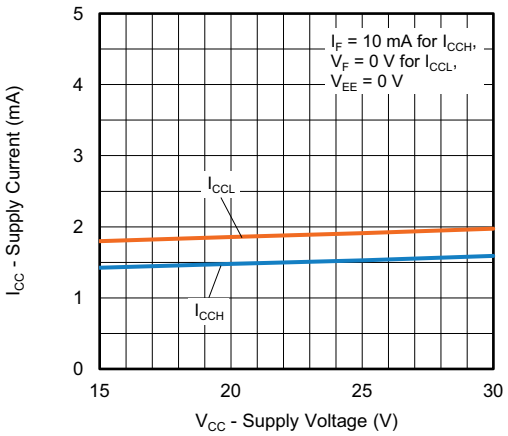

Fig. 13 - Supply Current vs. Supply Voltage

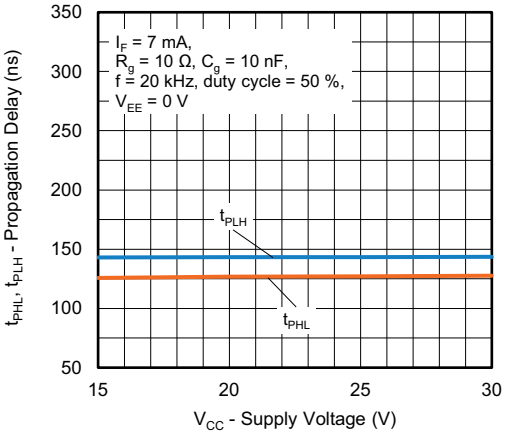

Fig. 12 - Propagation Delay vs. Supply Voltage

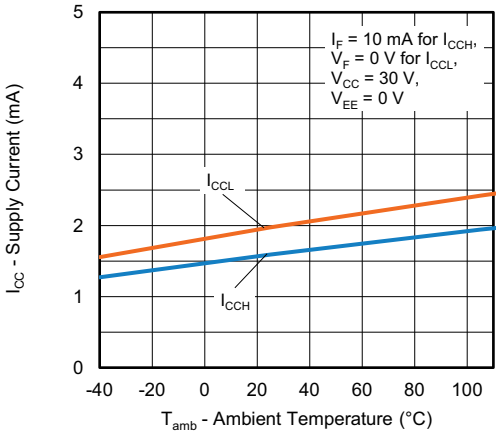

Fig. 14 - Supply Current vs. Ambient Temperature

For technical questions within your region: optocoupleranswers@vishay.com, ,
THIS DOCUMENT IS SUBJECT TO CHANGE WITHOUT NOTICE. THE PRODUCTS DESCRIBED HEREIN AND THIS DOCUMENT ARE SUBJECT TO SPECIFIC DISCLAIMERS, SET FORTH AT www.vishay.com/doc?91000

PACKAGE DIMENSIONS (in millimeters)

DIP-8

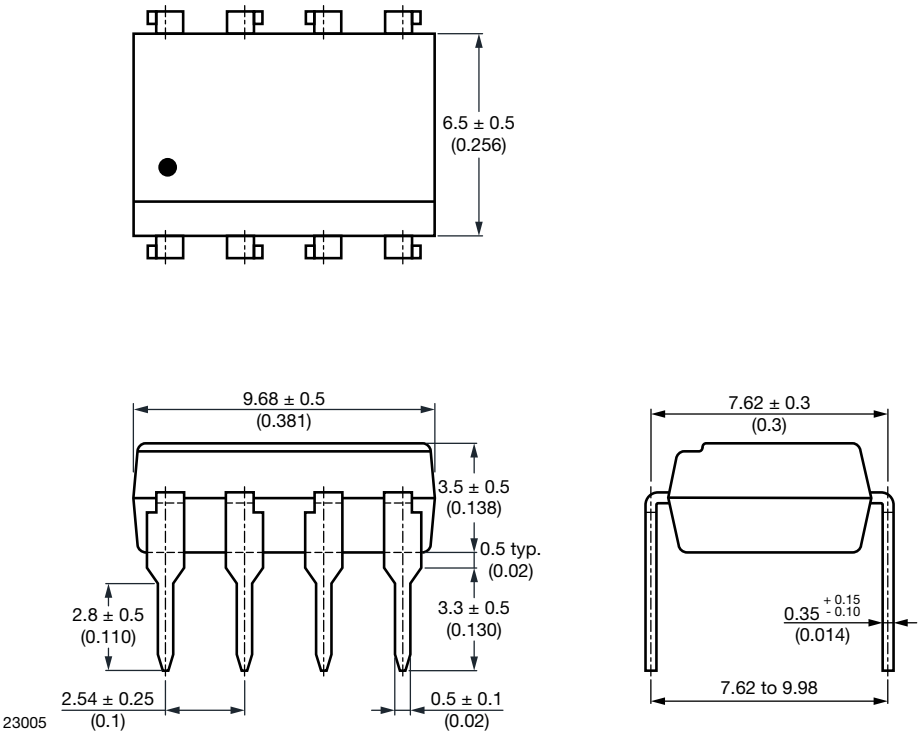

Fig. 15

DIP-8, 400 mil

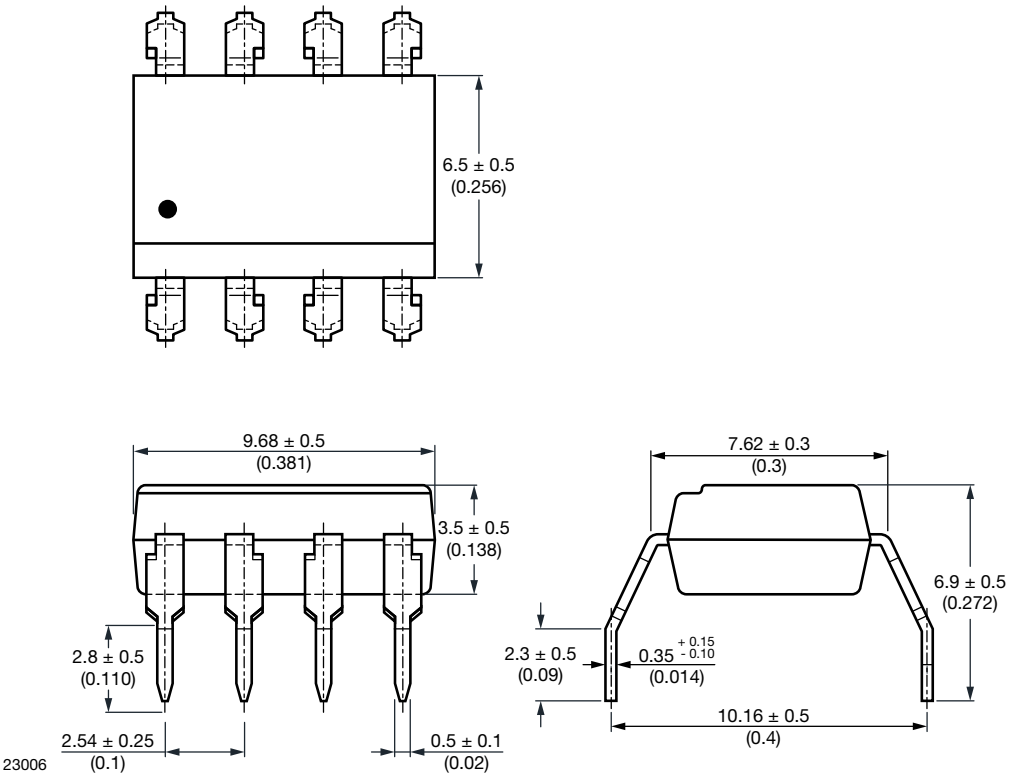

For technical questions within your region: optocoupleranswers@vishay.com, ,
THIS DOCUMENT IS SUBJECT TO CHANGE WITHOUT NOTICE. THE PRODUCTS DESCRIBED HEREIN AND THIS DOCUMENT ARE SUBJECT TO SPECIFIC DISCLAIMERS, SET FORTH AT www.vishay.com/doc?91000

Fig. 16

SMD-8

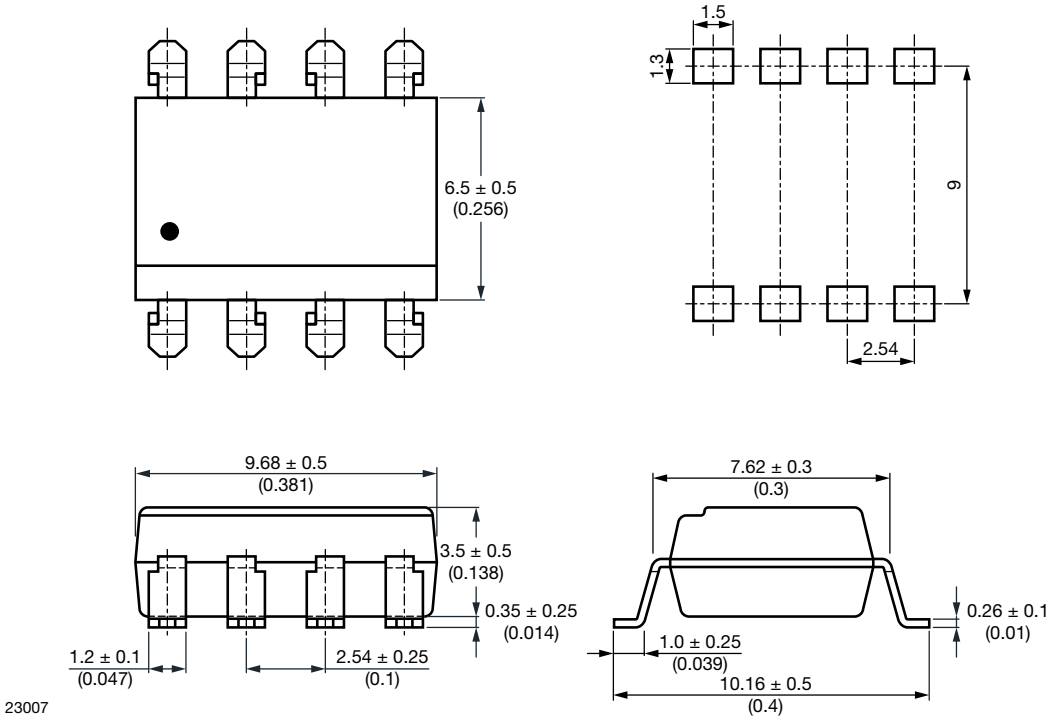

Fig. 17

PACKAGE MARKING

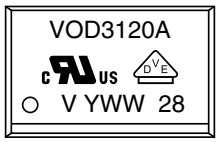

Fig. 18 - Example of VOD3120AB-VT

Notes

- "YWW" is the date code marking (Y = year code, WW = week code)
- VDE logo is only marked on VDE option parts
- Tape and reel suffix (T) is not part of the package marking

For technical questions within your region: optocoupleranswers@vishay.com, ,
THIS DOCUMENT IS SUBJECT TO CHANGE WITHOUT NOTICE. THE PRODUCTS DESCRIBED HEREIN AND THIS DOCUMENT ARE SUBJECT TO SPECIFIC DISCLAIMERS, SET FORTH AT www.vishay.com/doc?91000

PACKAGING INFORMATION (in millimeters)

DEVICES PER TUBES			
TYPE	UNITS/TUBE	TUBES/BOX	UNITS/BOX
DIP-8	50	40	2000
DIP-8, 400 mil	50	40	2000

SMD-8 Tape

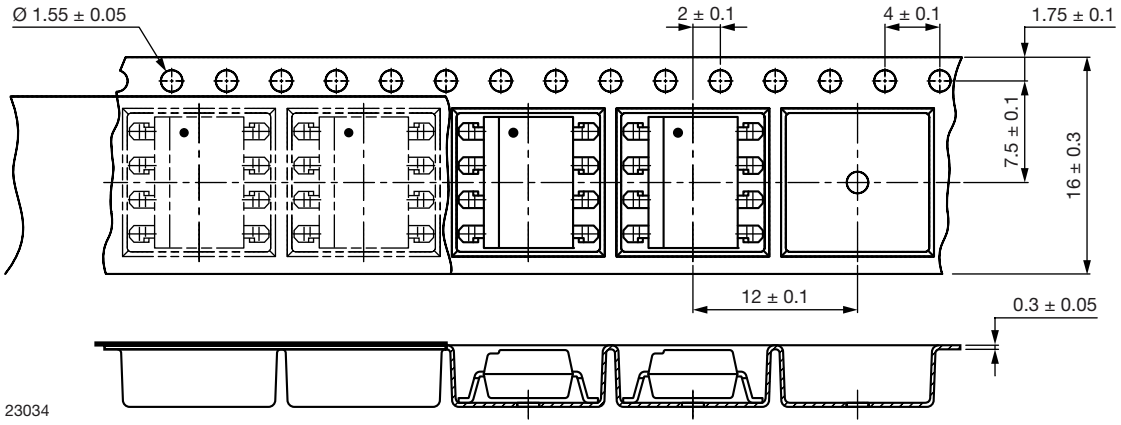

Fig. 19 - Tape and Reel Packaging (1000 pieces on reel)

SMD-8 Tape, 180° Orientation

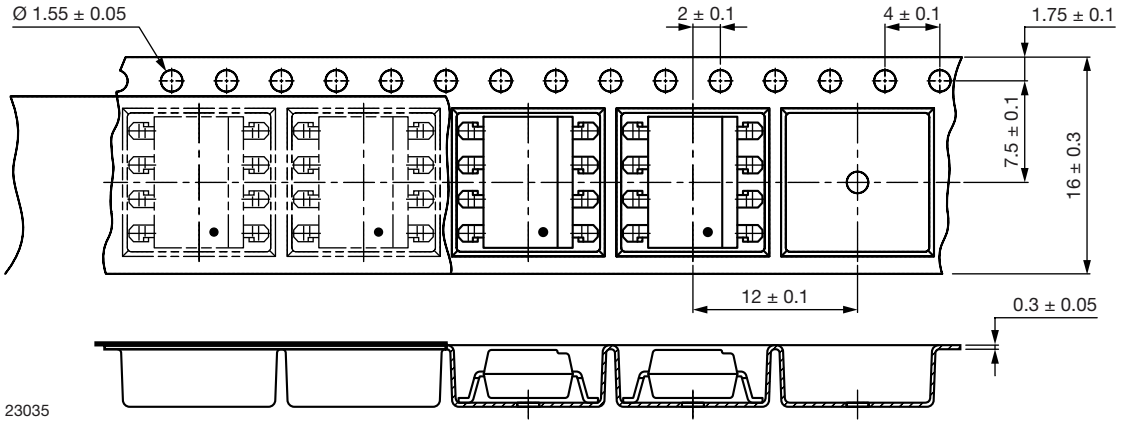

Fig. 20 - Tape and Reel Packaging (1000 pieces on reel)

For technical questions within your region: optocoupleranswers@vishay.com, ,
THIS DOCUMENT IS SUBJECT TO CHANGE WITHOUT NOTICE. THE PRODUCTS DESCRIBED HEREIN AND THIS DOCUMENT ARE SUBJECT TO SPECIFIC DISCLAIMERS, SET FORTH AT www.vishay.com/doc?91000

Reel

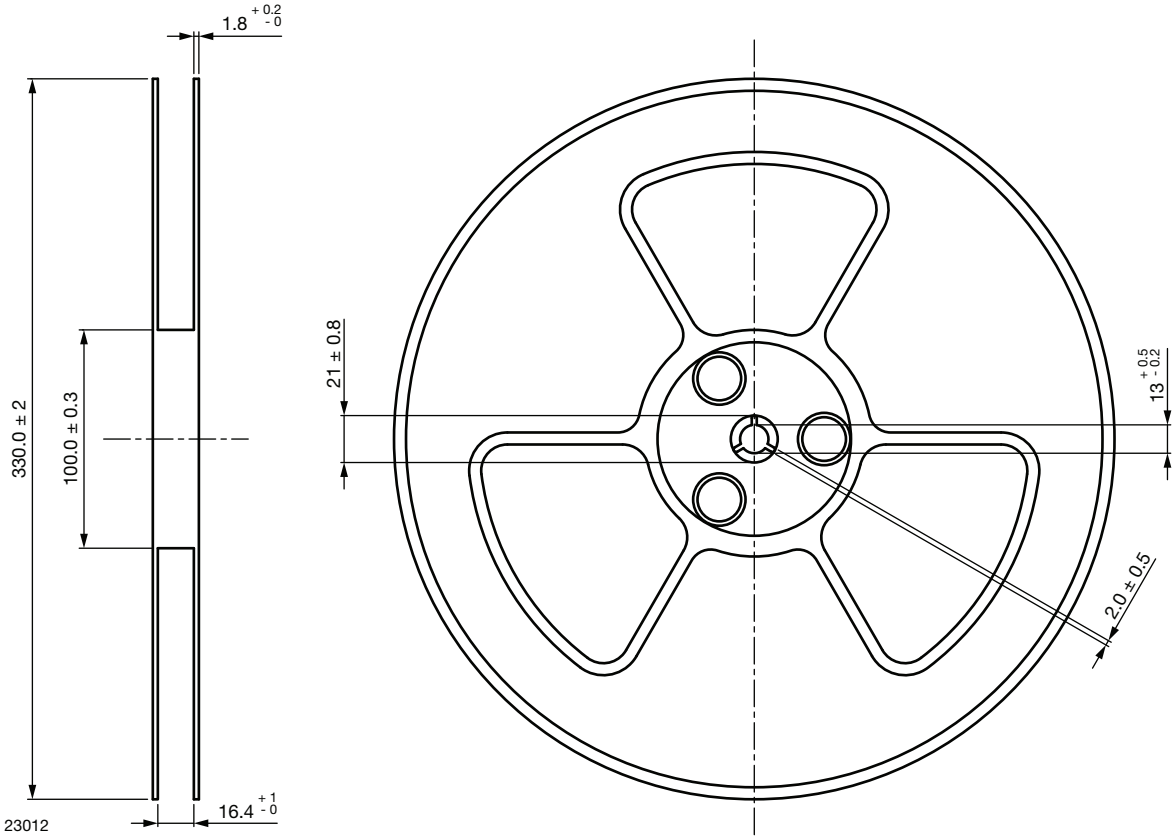

Fig. 21 - Tape and Reel Shipping Medium

For technical questions within your region: optocoupleranswers@vishay.com, ,
THIS DOCUMENT IS SUBJECT TO CHANGE WITHOUT NOTICE. THE PRODUCTS DESCRIBED HEREIN AND THIS DOCUMENT ARE SUBJECT TO SPECIFIC DISCLAIMERS, SET FORTH AT www.vishay.com/doc?91000

SOLDER PROFILES

IR Reflow Soldering (JEDEC® J-STD-020C compliant)

One time soldering reflow is recommended within the condition of temperature and time profile shown below. Do not solder more than three times.

PROFILE ITEM	CONDITIONS
Preheat	
- Temperature minimum ($T_{S\ min.}$)	150 °C
- Temperature maximum ($T_{S\ max.}$)	200 °C
- Time (min. to max.) (t_S)	90 s ± 30 s
Soldering zone	
- Temperature (T_L)	217 °C
- Time (t_L)	60 s
Peak temperature (T_p)	260 °C
Ramp-up rate	3 °C/s max.
Ramp-down rate	3 °C/s to 6 °C/s

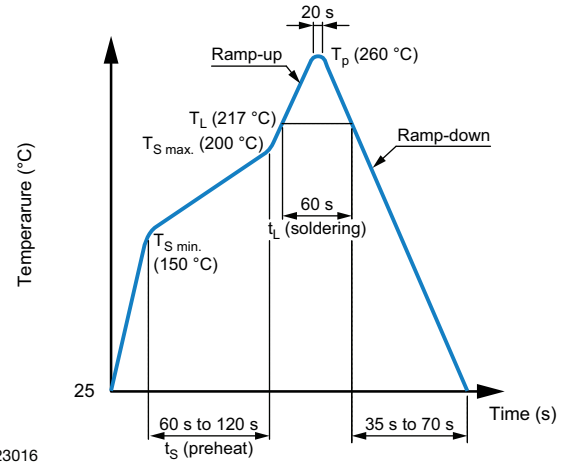

Fig. 1

Wave Soldering (JEDEC JESD22-A111 compliant)

One time soldering is recommended within the condition of temperature.

Temperature: 260 °C + 0 °C / - 5 °C

Time: 10 s

Preheat temperature: 25 °C to 140 °C

Preheat time: 30 s to 80 s

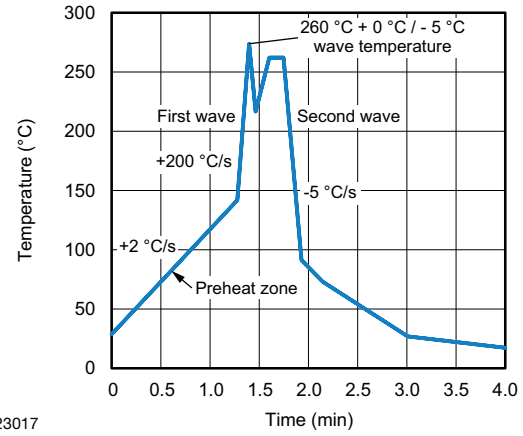

Fig. 2

Hand Soldering by Soldering Iron

Allow single lead soldering in every single process. One time soldering is recommended.

Temperature: 380 °C + 0 °C / - 5 °C

Time: 3 s max.

HANDLING AND STORAGE CONDITIONS

ESD level: HBM class 2

Floor life: unlimited

Conditions: $T_{amb} < 30$ °C, RH < 85 %

Moisture sensitivity level 1, according to J-STD-020

For technical questions within your region: optocoupleranswers@vishay.com, ,
THIS DOCUMENT IS SUBJECT TO CHANGE WITHOUT NOTICE. THE PRODUCTS DESCRIBED HEREIN AND THIS DOCUMENT ARE SUBJECT TO SPECIFIC DISCLAIMERS, SET FORTH AT www.vishay.com/doc?91000

Disclaimer

ALL PRODUCT, PRODUCT SPECIFICATIONS AND DATA ARE SUBJECT TO CHANGE WITHOUT NOTICE TO IMPROVE RELIABILITY, FUNCTION OR DESIGN OR OTHERWISE.

Vishay Intertechnology, Inc., its affiliates, agents, and employees, and all persons acting on its or their behalf (collectively, “Vishay”), disclaim any and all liability for any errors, inaccuracies or incompleteness contained in any datasheet or in any other disclosure relating to any product.

Vishay makes no warranty, representation or guarantee regarding the suitability of the products for any particular purpose or the continuing production of any product. To the maximum extent permitted by applicable law, Vishay disclaims (i) any and all liability arising out of the application or use of any product, (ii) any and all liability, including without limitation special, consequential or incidental damages, and (iii) any and all implied warranties, including warranties of fitness for particular purpose, non-infringement and merchantability.

Statements regarding the suitability of products for certain types of applications are based on Vishay's knowledge of typical requirements that are often placed on Vishay products in generic applications. Such statements are not binding statements about the suitability of products for a particular application. It is the customer's responsibility to validate that a particular product with the properties described in the product specification is suitable for use in a particular application. Parameters provided in datasheets and / or specifications may vary in different applications and performance may vary over time. All operating parameters, including typical parameters, must be validated for each customer application by the customer's technical experts. Product specifications do not expand or otherwise modify Vishay's terms and conditions of purchase, including but not limited to the warranty expressed therein.

Hyperlinks included in this datasheet may direct users to third-party websites. These links are provided as a convenience and for informational purposes only. Inclusion of these hyperlinks does not constitute an endorsement or an approval by Vishay of any of the products, services or opinions of the corporation, organization or individual associated with the third-party website. Vishay disclaims any and all liability and bears no responsibility for the accuracy, legality or content of the third-party website or for that of subsequent links.

Vishay products are not designed for use in life-saving or life-sustaining applications or any application in which the failure of the Vishay product could result in personal injury or death unless specifically qualified in writing by Vishay. Customers using or selling Vishay products not expressly indicated for use in such applications do so at their own risk. Please contact authorized Vishay personnel to obtain written terms and conditions regarding products designed for such applications.

No license, express or implied, by estoppel or otherwise, to any intellectual property rights is granted by this document or by any conduct of Vishay. Product names and markings noted herein may be trademarks of their respective owners.

© 2024 VISHAY INTERTECHNOLOGY, INC. ALL RIGHTS RESERVED

THIS DOCUMENT IS SUBJECT TO CHANGE WITHOUT NOTICE. THE PRODUCTS DESCRIBED HEREIN AND THIS DOCUMENT ARE SUBJECT TO SPECIFIC DISCLAIMERS, SET FORTH AT www.vishay.com/doc?91000