# Optocoupler, Phototriac Output, Zero Crossing, High dV/dt, Low Input Current, SOP-4 Package




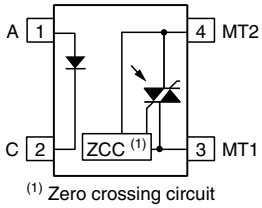


## FEATURES

- Flat 2.0 mm SOP-4 package
- High static dV/dt 1000 V/µs
- High input sensitivity $I_{FT}$ = 5 mA
- 100 mA on-state current
- Zero voltage crossing detector
- 800 V peak off-state blocking voltage
- Isolation rated voltage 3750 $V_{RMS}$
- Material categorization: for definitions of compliance please see www.vishay.com/doc?99912

Pb-free
e3
RoHS COMPLIANT

## DESIGN SUPPORT TOOLS

click logo to get started

3D Models Available | Design Tools Available | Related Documents

## DESCRIPTION

The VOT8024AM consists of a GaAs IRLED optically coupled to a photosensitive zero crossing TRIAC packaged in a board space saving tiny flat SOP-4 package.

The VOT8024AM isolates low-voltage logic from 120 $V_{AC}$, 240 $V_{AC}$, and 380 $V_{AC}$ lines to control resistive, inductive, or capacitive loads including motors, solenoids, high current thyristors or TRIAC and relays.

## APPLICATIONS

- Power TRIAC driver in solid-state relays
- 3-phase AC equipment
- Motor control
- Industrial control
- White goods / household equipment

## AGENCY APPROVALS

- UL 1577
- cUL
- DIN EN 60747-5-5 (VDE 0884-5), available with option "V"

## ORDERING INFORMATION

| V | O | T | 8 | 0 | 2 | 4 | A | M | - | V | T | # |
|---|---|---|---|---|---|---|---|---|---|---|---|---|
| PART NUMBER | | | | | | | | | | VDE OPTION | TAPE AND REEL | |

| AGENCY CERTIFIED/PACKAGE | TRIGGER CURRENT, $I_{FT}$ (mA) |
|---|---|
| **UL, cUL** | **5** |
| SOP-4 | VOT8024AM-T |
| SOP-4, 180° orientation | VOT8024AM-T2 |
| **VDE, UL, cUL** | **5** |
| SOP-4 | VOT8024AM-VT |
| SOP-4, 180° orientation | VOT8024AM-VT2 |


For technical questions, contact: optocoupleranswers@vishay.com
THIS DOCUMENT IS SUBJECT TO CHANGE WITHOUT NOTICE. THE PRODUCTS DESCRIBED HEREIN AND THIS DOCUMENT ARE SUBJECT TO SPECIFIC DISCLAIMERS, SET FORTH AT www.vishay.com/doc?91000

| **ABSOLUTE MAXIMUM RATINGS** ($T_{amb}$ = 25 °C, unless otherwise specified) | | | | |
|---|---|---|---|---|
| **PARAMETER** | **TEST CONDITION** | **SYMBOL** | **VALUE** | **UNIT** |
| **INPUT** | | | | |
| Reverse voltage | | $V_R$ | 6 | V |
| Forward current | | $I_F$ | 50 | mA |
| Power dissipation | | $P_{diss}$ | 70 | mW |
| Junction temperature | | $T_j$ | 125 | °C |
| **OUTPUT** | | | | |
| Peak off-state voltage | | $V_{DRM}$ | 800 | V |
| Power dissipation | | $P_{diss}$ | 300 | mW |
| On-state current | | $I_{T(RMS)}$ | 100 | mA |
| Peak repetitive surge current | PW = 1 ms, 120 pps | $I_{TSM}$ | 1 | A |
| Junction temperature | | $T_j$ | 125 | °C |
| **COUPLER** | | | | |
| Storage temperature range | | $T_{stg}$ | -55 to +150 | °C |
| Ambient temperature range | | $T_{amb}$ | -55 to +110 | °C |
| Total power dissipation | | $P_{diss}$ | 330 | mW |
| Soldering temperature | For 10 s | $T_{sld}$ | 260 | °C |

**Note**

- Stresses in excess of the absolute maximum ratings can cause permanent damage to the device. Functional operation of the device is not implied at these or any other conditions in excess of those given in the operational sections of this document. Exposure to absolute maximum ratings for extended periods of the time can adversely affect reliability.
  This phototriac should not be used to drive a load directly. It is intended to be a trigger device only

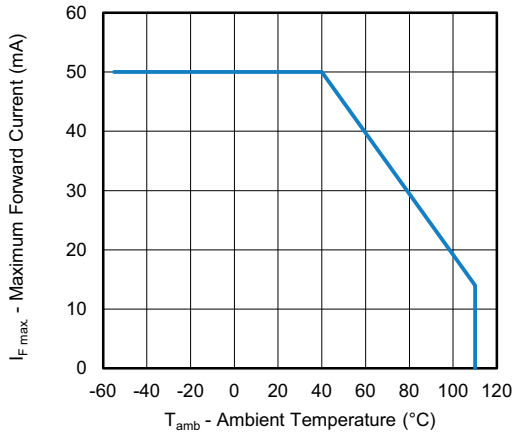


Fig. 1 - Maximum Forward Current vs. Ambient Temperature

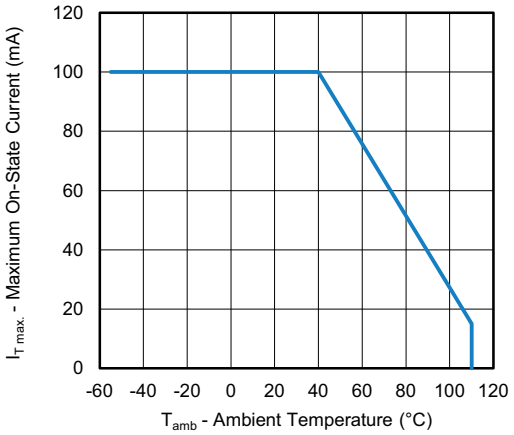


Fig. 2 - Maximum On-State Current vs. Ambient Temperature


For technical questions, contact: optocoupleranswers@vishay.com
THIS DOCUMENT IS SUBJECT TO CHANGE WITHOUT NOTICE. THE PRODUCTS DESCRIBED HEREIN AND THIS DOCUMENT ARE SUBJECT TO SPECIFIC DISCLAIMERS, SET FORTH AT www.vishay.com/doc?91000

| **ELECTRICAL CHARACTERISTICS** ($T_{amb}$ = 25 °C, unless otherwise specified) | | | | | | |
|---|---|---|---|---|---|---|
| **PARAMETER** | **TEST CONDITION** | **SYMBOL** | **MIN.** | **TYP.** | **MAX.** | **UNIT** |
| **INPUT** | | | | | | |
| Forward voltage | $I_F$ = 20 mA | $V_F$ | - | 1.2 | 1.4 | V |
| Reverse current | $V_R$ = 6 V | $I_R$ | - | 0.05 | 10 | µA |
| **OUTPUT** | | | | | | |
| Off-state current | $V_{DRM}$ = 800 V | $I_{DRM}$ | - | - | 0.5 | µA |
| On-state voltage | $I_T$ = 100 mA peak | $V_{TM}$ | - | - | 3 | V |
| Holding current | | $I_H$ | - | 400 | - | µA |
| Zero cross inhibit voltage | $I_F$ = rated $I_{FT}$ | $V_{INH}$ | - | 5 | 20 | V |
| Critical rate of rise of off-state voltage | | dV/dt (1) | 1000 | - | - | V/µs |
| Leakage in inhibit state | $I_F$ = rated $I_{FT}$, rated $V_{DRM}$, off-state | $I_{DRM2}$ | - | - | 500 | µA |
| **COUPLER** | | | | | | |
| Trigger current | $V_{TM}$ = 3 V | $I_{FT}$ | - | - | 5 | mA |

**Notes**

- Minimum and maximum values were tested requirements. Typical values are characteristics of the device and are the result of engineering evaluations. Typical values are for information only and are not part of the testing requirements

(1) Static dV/dt

| **SAFETY AND INSULATION RATINGS** ($T_{amb}$ = 25 °C, unless otherwise specified) | | | | |
|---|---|---|---|---|
| **PARAMETER** | **TEST CONDITION** | **SYMBOL** | **VALUE** | **UNIT** |
| Climatic classification | According to IEC 68 part 1 | | 55 / 115 / 21 | |
| Comparative tracking index | Insulation group IIIa | CTI | 175 | |
| Maximum rated withstanding isolation voltage | According to UL1577, t = 1 min | $V_{ISO}$ | 3750 | $V_{RMS}$ |
| Maximum transient isolation voltage | According to DIN EN 60747-5-5 | $V_{IOTM}$ | 6000 | $V_{peak}$ |
| Maximum repetitive peak isolation voltage | According to DIN EN 60747-5-5 | $V_{IORM}$ | 565 | $V_{peak}$ |
| Isolation resistance | $V_{IO}$ = 500 V, $T_{amb}$ = 25 °C | $R_{IO}$ | $10^{12}$ | Ω |
| | $V_{IO}$ = 500 V, $T_{amb}$ = 100 °C | $R_{IO}$ | $10^{11}$ | Ω |
| Output safety power | | $P_{SO}$ | 300 | mW |
| Input safety current | | $I_{SI}$ | 50 | mA |
| Input safety temperature | | $T_S$ | 150 | °C |
| Creepage distance | | | > 5 | mm |
| Clearance distance | | | > 5 | mm |
| Insulation thickness | | DTI | > 0.4 | mm |

**Note**

- As per IEC 60747-5-5, § 7.4.3.8.2, this optocoupler is suitable for “safe electrical insulation” only within the safety ratings. Compliance with the safety ratings shall be ensured by means of protective circuits


For technical questions, contact: optocoupleranswers@vishay.com
THIS DOCUMENT IS SUBJECT TO CHANGE WITHOUT NOTICE. THE PRODUCTS DESCRIBED HEREIN AND THIS DOCUMENT ARE SUBJECT TO SPECIFIC DISCLAIMERS, SET FORTH AT www.vishay.com/doc?91000

**TYPICAL CHARACTERISTICS** ($T_{amb}$ = 25 °C, unless otherwise specified)

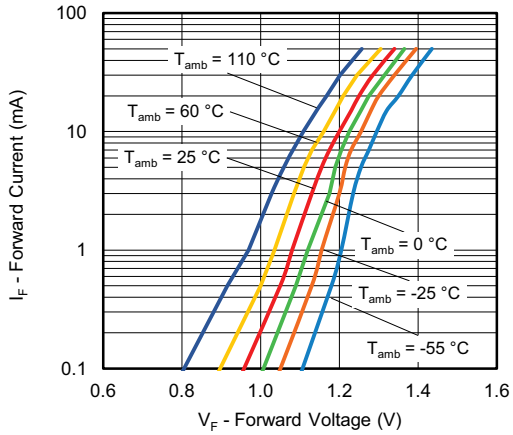


Fig. 3 - Forward Current vs. Forward Voltage

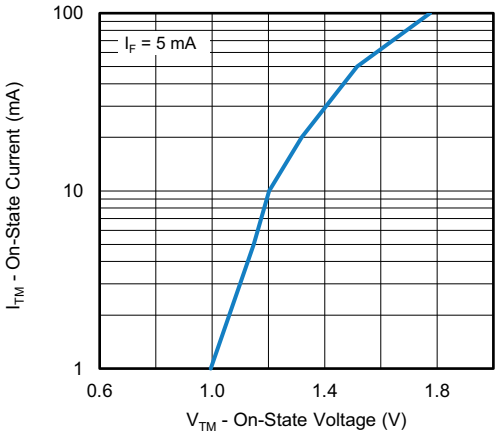


Fig. 6 - On State Current vs. On State Voltage

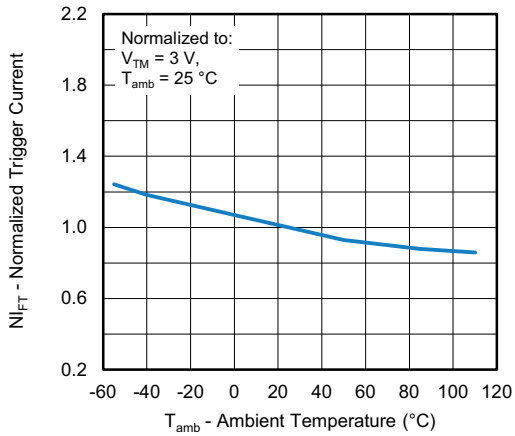


Fig. 4 - Normalized Trigger Current vs. Ambient Temperature

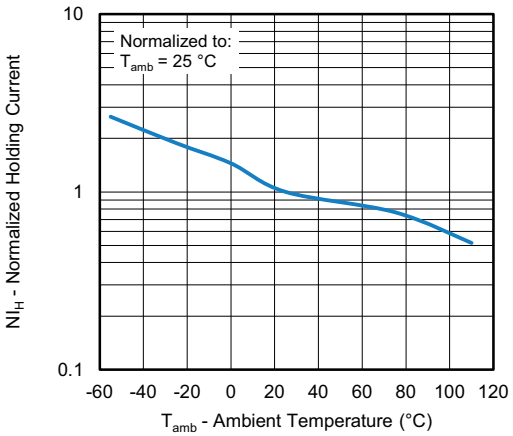


Fig. 7 - Normalized Holding Current vs. Ambient Temperature

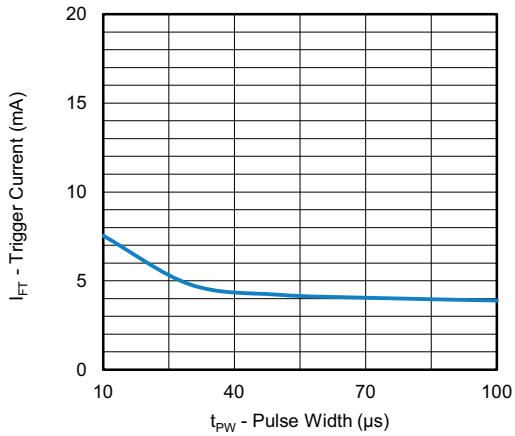


Fig. 5 - Trigger Current vs. Pulse Width

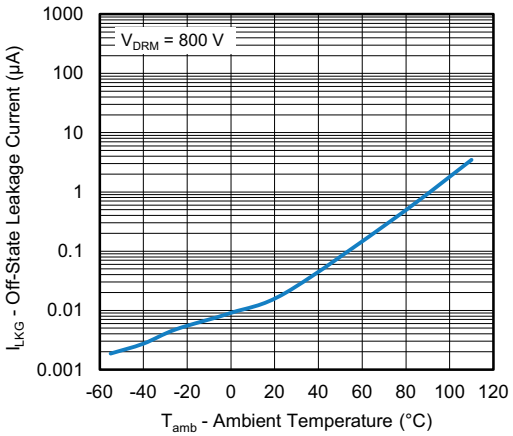


Fig. 8 - Off-State Leakage Current vs. Ambient Temperature


For technical questions, contact: optocoupleranswers@vishay.com
THIS DOCUMENT IS SUBJECT TO CHANGE WITHOUT NOTICE. THE PRODUCTS DESCRIBED HEREIN AND THIS DOCUMENT ARE SUBJECT TO SPECIFIC DISCLAIMERS, SET FORTH AT www.vishay.com/doc?91000

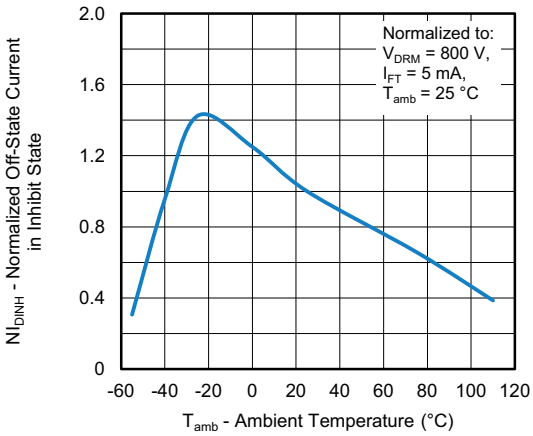


Fig. 9 - Off-State Current in Inhibit State vs. Ambient Temperature

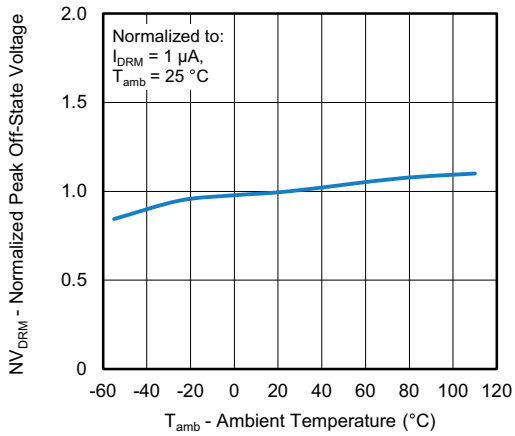


Fig. 10 - Normalized Peak Off-State Voltage vs. Ambient Temperature

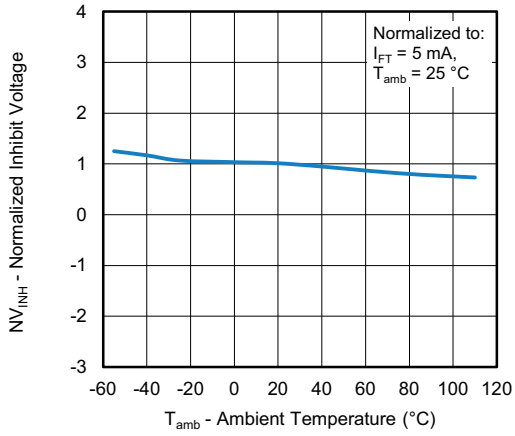


Fig. 11 - Normalized Inhibit Voltage vs. Ambient Temperature


For technical questions, contact: optocoupleranswers@vishay.com
THIS DOCUMENT IS SUBJECT TO CHANGE WITHOUT NOTICE. THE PRODUCTS DESCRIBED HEREIN AND THIS DOCUMENT ARE SUBJECT TO SPECIFIC DISCLAIMERS, SET FORTH AT www.vishay.com/doc?91000

## PACKAGE DIMENSIONS (in millimeters)

### SOP-4

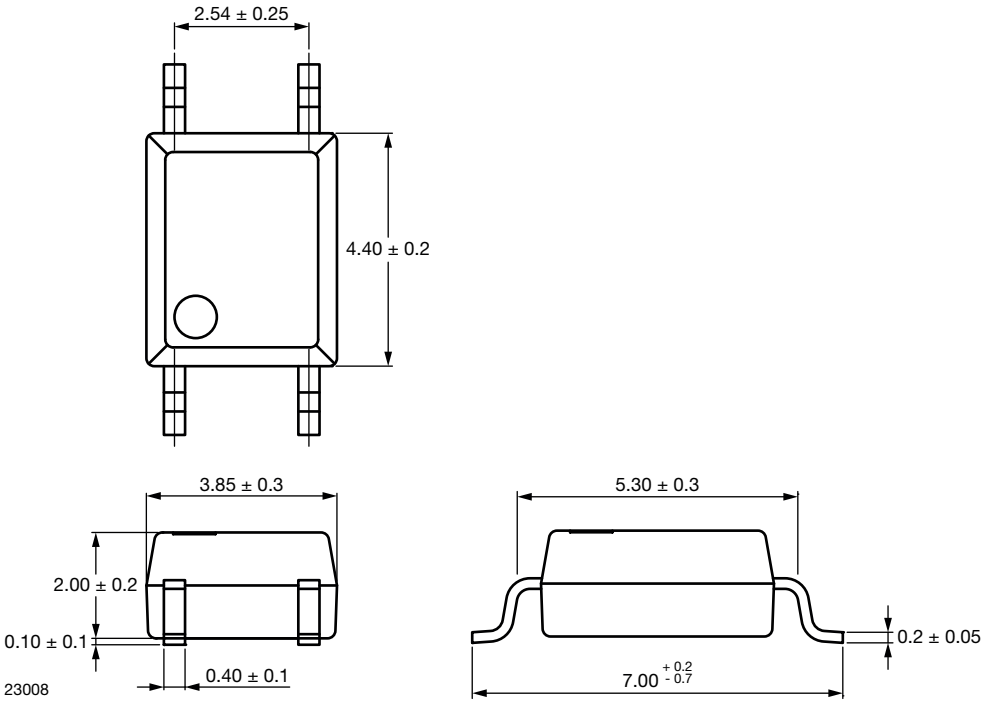


Fig. 1

## PACKAGE MARKING

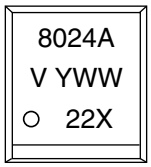


Fig. 12 - Example of VOT8024AM-VT

**Notes**

- "YWW" is the date code marking (Y = year code, WW = week code)
- "X" is only marked on VDE option parts
- Tape and reel suffix (T) is not part of the package marking


For technical questions, contact: optocoupleranswers@vishay.com
THIS DOCUMENT IS SUBJECT TO CHANGE WITHOUT NOTICE. THE PRODUCTS DESCRIBED HEREIN AND THIS DOCUMENT ARE SUBJECT TO SPECIFIC DISCLAIMERS, SET FORTH AT www.vishay.com/doc?91000

## PACKAGING INFORMATION (in millimeters)

### Tape SOP-4

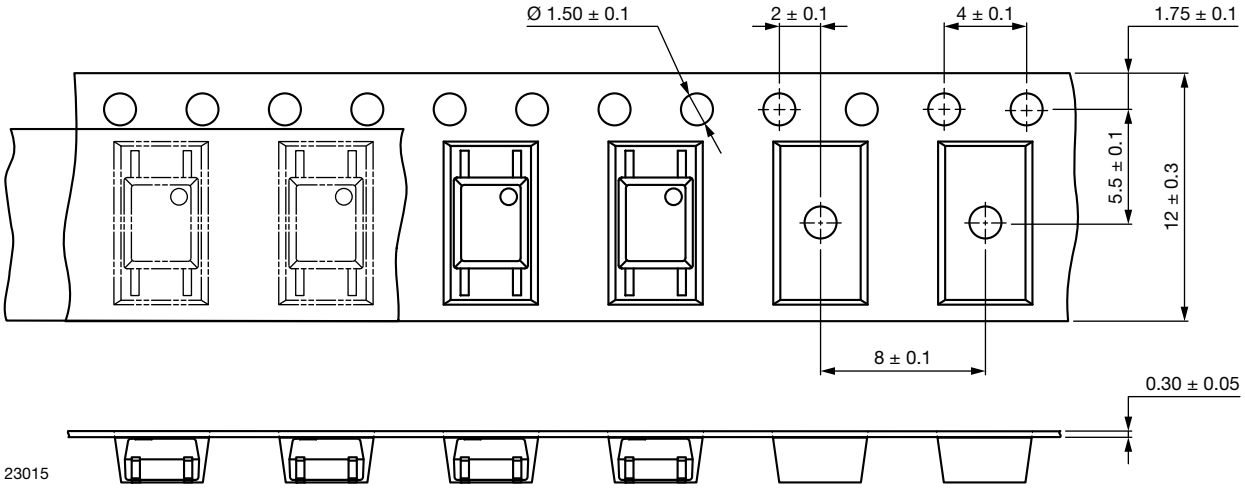


Fig. 13 - Tape and Reel Packaging (3000 pieces on reel)

### Tape SOP-4, 180° Orientation

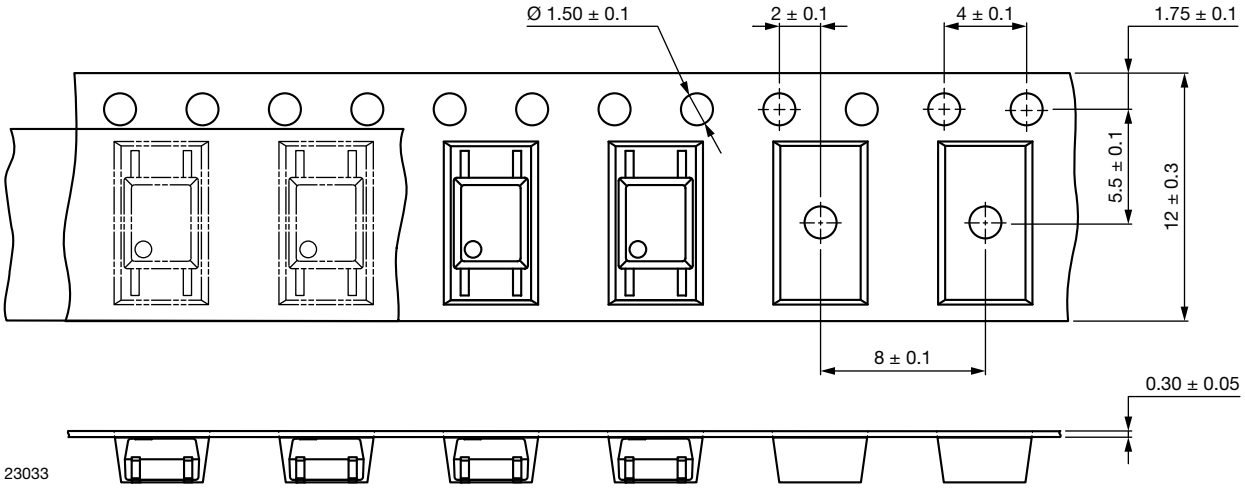


Fig. 14 - Tape and Reel Packaging (3000 pieces on reel)


For technical questions, contact: optocoupleranswers@vishay.com
THIS DOCUMENT IS SUBJECT TO CHANGE WITHOUT NOTICE. THE PRODUCTS DESCRIBED HEREIN AND THIS DOCUMENT ARE SUBJECT TO SPECIFIC DISCLAIMERS, SET FORTH AT www.vishay.com/doc?91000

**Reel**

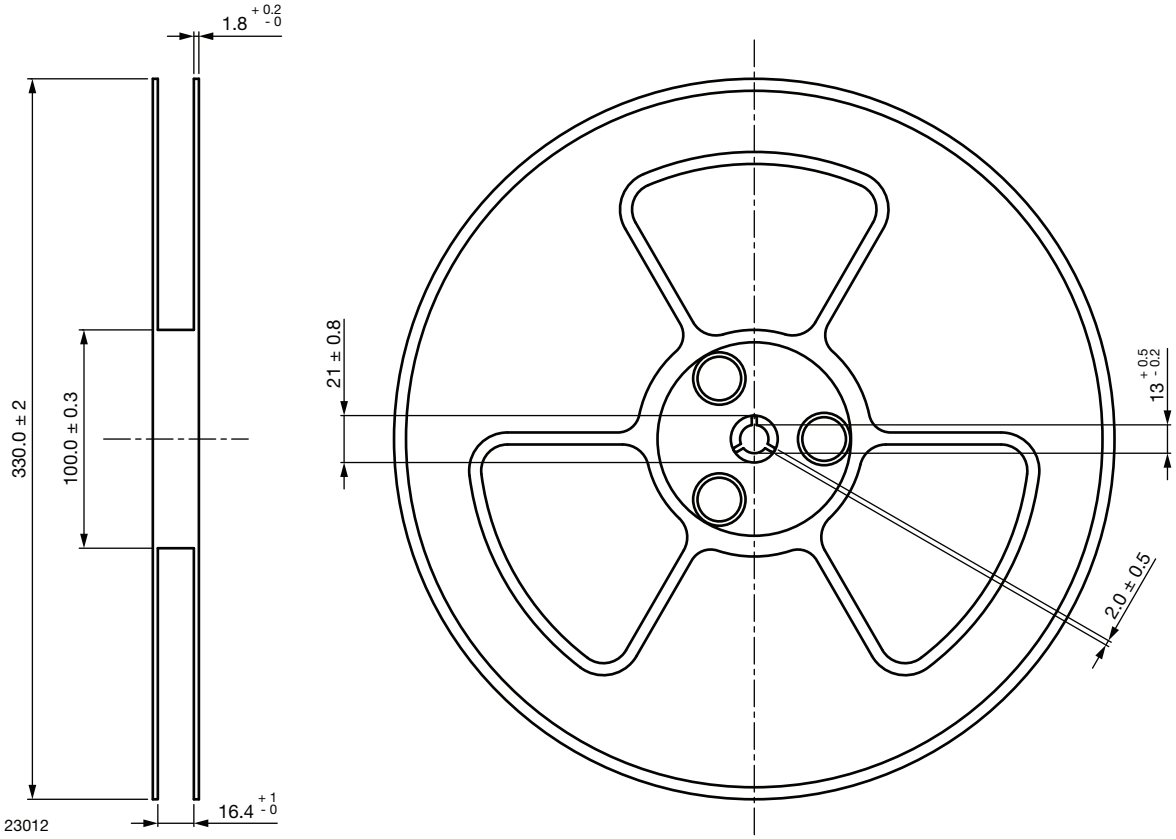


Fig. 15 - Tape and Reel Shipping Medium


For technical questions, contact: optocoupleranswers@vishay.com
THIS DOCUMENT IS SUBJECT TO CHANGE WITHOUT NOTICE. THE PRODUCTS DESCRIBED HEREIN AND THIS DOCUMENT ARE SUBJECT TO SPECIFIC DISCLAIMERS, SET FORTH AT www.vishay.com/doc?91000

## SOLDER PROFILES

### IR Reflow Soldering (JEDEC® J-STD-020C compliant)

One time soldering reflow is recommended within the condition of temperature and time profile shown below. Do not solder more than three times.

| PROFILE ITEM | CONDITIONS |
|---|---|
| Preheat | |
| - Temperature minimum ($T_{S\ min.}$) | 150 °C |
| - Temperature maximum ($T_{S\ max.}$) | 200 °C |
| - Time (min. to max.) ($t_S$) | 90 s ± 30 s |
| Soldering zone | |
| - Temperature ($T_L$) | 217 °C |
| - Time ($t_L$) | 60 s |
| Peak temperature ($T_p$) | 260 °C |
| Ramp-up rate | 3 °C/s max. |
| Ramp-down rate | 3 °C/s to 6 °C/s |

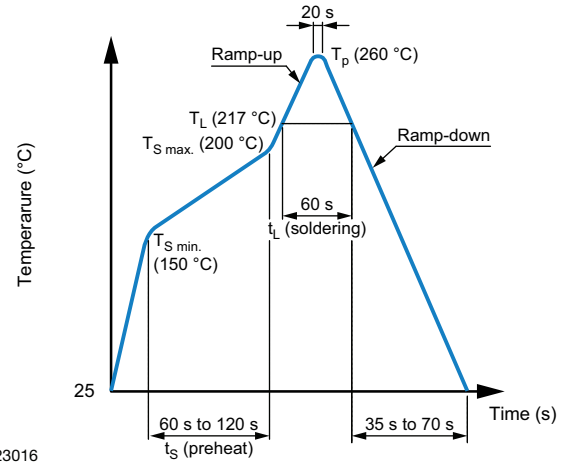


Fig. 2

### Wave Soldering (JEDEC JESD22-A111 compliant)

One time soldering is recommended within the condition of temperature.

Temperature: 260 °C + 0 °C / - 5 °C

Time: 10 s

Preheat temperature: 25 °C to 140 °C

Preheat time: 30 s to 80 s

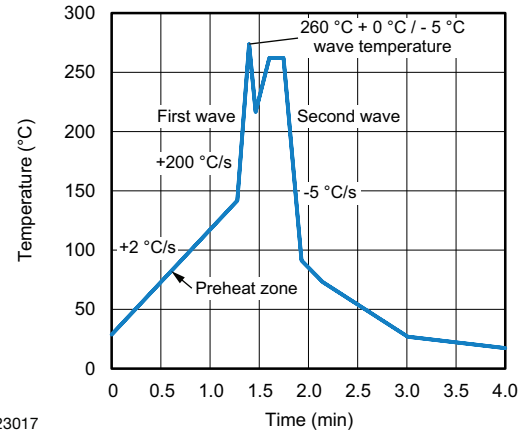


Fig. 3

### Hand Soldering by Soldering Iron

Allow single lead soldering in every single process. One time soldering is recommended.

Temperature: 380 °C + 0 °C / - 5 °C

Time: 3 s max.

## HANDLING AND STORAGE CONDITIONS

ESD level: HBM class 2

Floor life: unlimited

Conditions: $T_{amb}$ < 30 °C, RH < 85 %

Moisture sensitivity level 1, according to J-STD-020


For technical questions, contact: optocoupleranswers@vishay.com
THIS DOCUMENT IS SUBJECT TO CHANGE WITHOUT NOTICE. THE PRODUCTS DESCRIBED HEREIN AND THIS DOCUMENT ARE SUBJECT TO SPECIFIC DISCLAIMERS, SET FORTH AT www.vishay.com/doc?91000

# Disclaimer

ALL PRODUCT, PRODUCT SPECIFICATIONS AND DATA ARE SUBJECT TO CHANGE WITHOUT NOTICE TO IMPROVE RELIABILITY, FUNCTION OR DESIGN OR OTHERWISE.

Vishay Intertechnology, Inc., its affiliates, agents, and employees, and all persons acting on its or their behalf (collectively, “Vishay”), disclaim any and all liability for any errors, inaccuracies or incompleteness contained in any datasheet or in any other disclosure relating to any product.

Vishay makes no warranty, representation or guarantee regarding the suitability of the products for any particular purpose or the continuing production of any product. To the maximum extent permitted by applicable law, Vishay disclaims (i) any and all liability arising out of the application or use of any product, (ii) any and all liability, including without limitation special, consequential or incidental damages, and (iii) any and all implied warranties, including warranties of fitness for particular purpose, non-infringement and merchantability.

Statements regarding the suitability of products for certain types of applications are based on Vishay's knowledge of typical requirements that are often placed on Vishay products in generic applications. Such statements are not binding statements about the suitability of products for a particular application. It is the customer's responsibility to validate that a particular product with the properties described in the product specification is suitable for use in a particular application. Parameters provided in datasheets and / or specifications may vary in different applications and performance may vary over time. All operating parameters, including typical parameters, must be validated for each customer application by the customer's technical experts. Product specifications do not expand or otherwise modify Vishay's terms and conditions of purchase, including but not limited to the warranty expressed therein.

Hyperlinks included in this datasheet may direct users to third-party websites. These links are provided as a convenience and for informational purposes only. Inclusion of these hyperlinks does not constitute an endorsement or an approval by Vishay of any of the products, services or opinions of the corporation, organization or individual associated with the third-party website. Vishay disclaims any and all liability and bears no responsibility for the accuracy, legality or content of the third-party website or for that of subsequent links.

Vishay products are not designed for use in life-saving or life-sustaining applications or any application in which the failure of the Vishay product could result in personal injury or death unless specifically qualified in writing by Vishay. Customers using or selling Vishay products not expressly indicated for use in such applications do so at their own risk. Please contact authorized Vishay personnel to obtain written terms and conditions regarding products designed for such applications.

No license, express or implied, by estoppel or otherwise, to any intellectual property rights is granted by this document or by any conduct of Vishay. Product names and markings noted herein may be trademarks of their respective owners.

***© 2024 VISHAY INTERTECHNOLOGY, INC. ALL RIGHTS RESERVED***



THIS DOCUMENT IS SUBJECT TO CHANGE WITHOUT NOTICE. THE PRODUCTS DESCRIBED HEREIN AND THIS DOCUMENT ARE SUBJECT TO SPECIFIC DISCLAIMERS, SET FORTH AT www.vishay.com/doc?91000