Widebody 2.5 A IGBT and MOSFET Driver

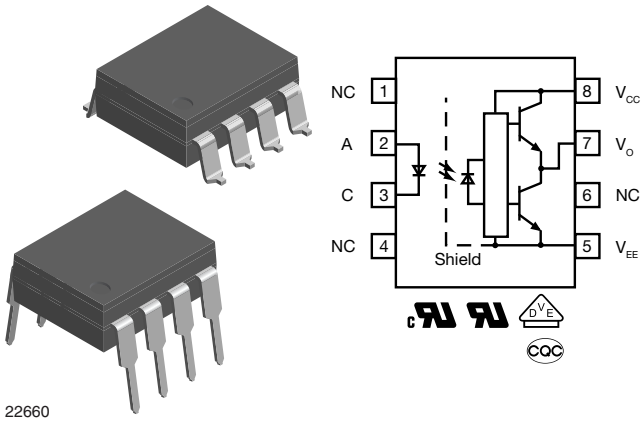

22660

FEATURES

- 2.5 A minimum peak output current
- 10 mm minimum external creepage distance
- 50 kV/µs (typ.) common mode rejection
- I_{CC} = 2.5 mA maximum supply current
- Under voltage lock-out (UVLO) with hysteresis
- Wide operating V_{CC} range: 15 V to 32 V
- Industrial temperature range: -40 °C to +100 °C
- Material categorization: for definitions of compliance please see www.vishay.com/doc?99912

Pb-free

e3

RoHS COMPLIANT

HALOGEN FREE GREEN (5-2008)

LINKS TO ADDITIONAL RESOURCES

Product Page | Design Tools | Footprints | Schematics | Videos

DESCRIPTION

The VOW3120 consists of an infrared light emitting diode optically coupled to an integrated circuit with a power output stage. This optocoupler is ideally suited for driving power IGBTs and MOSFETs used in motor control and inverter applications. The high operating voltage range of the output stage provides the drive voltages required by gate controlled devices. The voltage and current supplied by this optocoupler makes it ideally suited for directly driving IGBTs with ratings up to 1200 V/100 A. For IGBTs with higher ratings, the VOW3120 can be used to drive a discrete power stage which drives the IGBT gate.

The VOW3120 provides higher isolation for applications operating at higher working voltages, and or higher pollution degree criteria. Higher V_{IORM}, V_{IOTM}, creepage and clearance distances, make the VOW3120 ideal for many industrial control and power conversion applications.

APPLICATIONS

- Industrial welding equipment
- Motor drives
- Industrial inverters
- Commercial and residential solar inverters
- Wind generator inverters
- EV and plug-in HEV chargers

AGENCY APPROVALS

All parts are certified under base model VOW3120. This model number should be used when consulting safety agency documents.

- UL
- cUL
- DIN EN 60747-5-5 (VDE 0884-5), available with option 1
- CQC GB4943.1
- CQC GB8898

ORDERING INFORMATION

V	O	W	3	1	2	0	-	X	0	#	#	T
PART NUMBER								PACKAGE OPTION				TAPE AND REEL

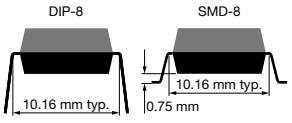

PACKAGE	UL, cUL, CQC	UL, cUL, CQC, VDE (option 1)
DIP-8, widebody, 400 mil	VOW3120	VOW3120-X001
SMD-8, widebody, 400 mil (option 7)	-	VOW3120-X017T

For technical questions, contact: optocoupleranswers@vishay.com

THIS DOCUMENT IS SUBJECT TO CHANGE WITHOUT NOTICE. THE PRODUCTS DESCRIBED HEREIN AND THIS DOCUMENT ARE SUBJECT TO SPECIFIC DISCLAIMERS, SET FORTH AT www.vishay.com/doc?91000

ABSOLUTE MAXIMUM RATINGS (T_{amb} = 25 °C, unless otherwise specified)				
PARAMETER	**TEST CONDITION**	**SYMBOL**	**VALUE**	**UNIT**
INPUT				
Input forward current		I_F	25	mA
Peak transient input current	< 1 µs pulse width, 300 pps	$I_{F(TRAN)}$	1	A
Reverse input voltage		V_R	5	V
Input power dissipation		P_{diss}	40	mW
LED junction temperature		T_j	125	°C
OUTPUT				
High peak output current (1)		$I_{OH(PEAK)}$	2.5	A
Low peak output current (1)		$I_{OL(PEAK)}$	2.5	A
Supply voltage		(V_{CC} - V_{EE})	0 to +35	V
Output voltage		$V_{O(PEAK)}$	0 to +V_{CC}	V
Output power dissipation		P_{diss}	220	mW
Output junction temperature		T_j	125	°C
OPTOCOUPLER				
Storage temperature range		T_{stg}	-55 to +150	°C
Ambient operating temperature range		T_{amb}	-40 to +100	°C
Total power dissipation		P_{tot}	260	mW
Lead solder temperature	For 10 s, 1.6 mm below seating plane	T_{sld}	260	°C

Notes

- Stresses in excess of the absolute maximum ratings can cause permanent damage to the device. Functional operation of the device is not implied at these or any other conditions in excess of those given in the operational sections of this document. Exposure to absolute maximum ratings for extended periods of the time can adversely affect reliability.

(1) Maximum pulse width = 10 µs, maximum duty cycle = 0.2 %. This value is intended to allow for component tolerances for designs with I_O peak minimum = 2.5 A. See applications section for additional details on limiting I_{OH} peak.

RECOMMENDED OPERATING CONDITION				
PARAMETER	**SYMBOL**	**MIN.**	**MAX.**	**UNIT**
Power supply voltage	V_{CC} - V_{EE}	15	32	V
Input LED current (on)	I_F	10	-	mA
Input voltage (off)	$V_{F(OFF)}$	-3	0.8	V
Operating temperature	T_{amb}	-40	+100	°C

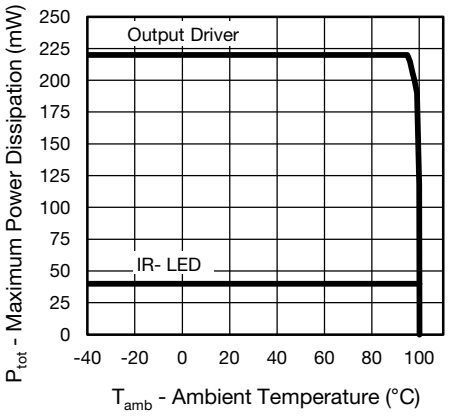

Fig. 1 - Dissipated Operating Power vs. Operating Temperature

For technical questions, contact: optocoupleranswers@vishay.com
THIS DOCUMENT IS SUBJECT TO CHANGE WITHOUT NOTICE. THE PRODUCTS DESCRIBED HEREIN AND THIS DOCUMENT ARE SUBJECT TO SPECIFIC DISCLAIMERS, SET FORTH AT www.vishay.com/doc?91000

THERMAL CHARACTERISTICS

PARAMETER	SYMBOL	VALUE	UNIT
LED power dissipation	P_{LED}	40	mW
Output power dissipation	P_{OUT}	220	mW
Total power dissipation	P_{TOT}	260	mW
Maximum LED junction temperature	$T_{j\ max.}$	125	°C
Maximum output die junction temperature	$T_{j\ max.}$	125	°C
Thermal resistance, LED to output	θ_{ED}	315	°C/W
Thermal resistance, LED to board	θ_{EB}	300	°C/W
Thermal resistance, output to board	θ_{DB}	80	°C/W
Thermal resistance, board to ambient	θ_{BA}	50	°C/W

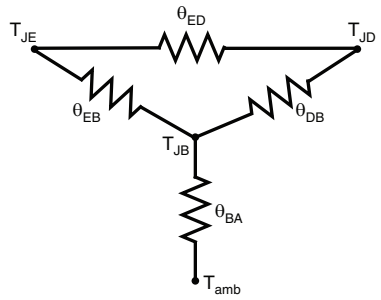

Note

- The thermal characteristics table above were measured at 25 °C and the thermal model is represented in the thermal network below. Each resistance value given in this model can be used to calculate the temperatures at each node for a given operating condition. The thermal resistance from board to ambient will be dependent on the type of PCB, layout and thickness of copper traces. For a detailed explanation of the thermal model, please reference Vishay's Thermal Characteristics of Optocouplers application note.

ELECTRICAL CHARACTERISTICS

PARAMETER	TEST CONDITION	SYMBOL	MIN.	TYP.	MAX.	UNIT
High level output current	$V_O = (V_{CC} - 4\ V)$	I_{OH}	0.5	-	-	A
	$V_O = (V_{CC} - 15\ V)$	I_{OH}	2.5	-	-	A
Low level output current	$V_O = (V_{EE} + 2.5\ V)$	I_{OL}	0.5	-	-	A
	$V_O = (V_{EE} + 15\ V)$	I_{OL}	2.5	-	-	A
High level output voltage	I_O = -100 mA	V_{OH}	V_{CC} - 4	-	-	V
Low level output voltage	I_O = 100 mA	V_{OL}	-	0.2	0.5	V
High level supply current	Output open, I_F = 10 mA to 16 mA	I_{CCH}	-	-	2.5	mA
Low level supply current	Output open, V_F = -3 V to +0.8 V	I_{CCL}	-	-	2.5	mA
Threshold input current low to high	I_O = 0 mA, V_O > 5 V	I_{FLH}	-	3.4	8	mA
Threshold input voltage high to low		V_{FHL}	0.8	-	-	V
Input forward voltage	I_F = 10 mA	V_F	1	1.36	1.6	V
Temperature coefficient of forward voltage	I_F = 10 mA	$\Delta V_F/\Delta T_{amb}$	-	-1.4	-	mV/°C
Input reverse breakdown voltage	I_R = 10 µA	$V_{(BR)}$	5	-	-	V
Input capacitance	f = 1 MHz, V_F = 0 V	C_{IN}	-	45	-	pF
UVLO threshold	$V_O \geq 5$ V, I_F = 10 mA	V_{UVLO+}	11	-	13.5	V
		V_{UVLO-}	9.5	-	12	V
UVLO hysteresis		$UVLO_{HYS}$	-	1.6	-	V
Capacitance (input to output)	f = 1 MHz, V_F = 0 V	C_{IO}	-	0.9	-	pF

Note

- Minimum and maximum values were tested over recommended operating conditions (T_{amb} = -40 °C to +100 °C, $I_{F(ON)}$ = 10 mA to 16 mA, $V_{F(OFF)}$ = -3 V to 0.8 V, V_{CC} = 15 V to 32 V, V_{EE} = ground) unless otherwise specified. Typical values are characteristics of the device and are the result of engineering evaluations. Typical values are for information only and are not part of the testing requirements. All typical values were measured at T_{amb} = 25 °C and with V_{CC} - V_{EE} = 32 V.

For technical questions, contact: optocoupleranswers@vishay.com
THIS DOCUMENT IS SUBJECT TO CHANGE WITHOUT NOTICE. THE PRODUCTS DESCRIBED HEREIN AND THIS DOCUMENT ARE SUBJECT TO SPECIFIC DISCLAIMERS, SET FORTH AT www.vishay.com/doc?91000

SWITCHING CHARACTERISTICS

PARAMETER	TEST CONDITION	SYMBOL	MIN.	TYP.	MAX.	UNIT
Propagation delay time to logic low output	R_g = 10 Ω, C_g = 10 nF, f = 10 kHz, duty cycle = 50 %	t_{PHL}	0.1	0.25	0.5	µs
Propagation delay time to logic high output	R_g = 10 Ω, C_g = 10 nF, f = 10 kHz, duty cycle = 50 %	t_{PLH}	0.1	0.25	0.5	µs
Pulse width distortion	R_g = 10 Ω, C_g = 10 nF, f = 10 kHz, duty cycle = 50 %	PWD	-	-	0.3	µs
Rise time	R_g = 10 Ω, C_g = 10 nF, f = 10 kHz, duty cycle = 50 %	t_r	-	0.1	-	µs
Fall time	R_g = 10 Ω, C_g = 10 nF, f = 10 kHz, duty cycle = 50 %	t_f	-	0.1	-	µs
UVLO turn on delay	V_O > 5 V, I_F = 10 mA	$T_{UVLO-ON}$	-	0.8	-	µs
UVLO turn off delay	V_O < 5 V, I_F = 10 mA	$T_{UVLO-OFF}$	-	0.6	-	µs

Note

- Minimum and maximum values were tested over recommended operating conditions (T_{amb} = -40 °C to +100 °C, $I_{F(ON)}$ = 10 mA to 16 mA, $V_{F(OFF)}$ = -3 V to 0.8 V, V_{CC} = 15 V to 32 V, V_{EE} = ground) unless otherwise specified. Typical values are characteristics of the device and are the result of engineering evaluations. Typical values are for information only and are not part of the testing requirements. All typical values were measured at T_{amb} = 25 °C and with V_{CC} - V_{EE} = 32 V.

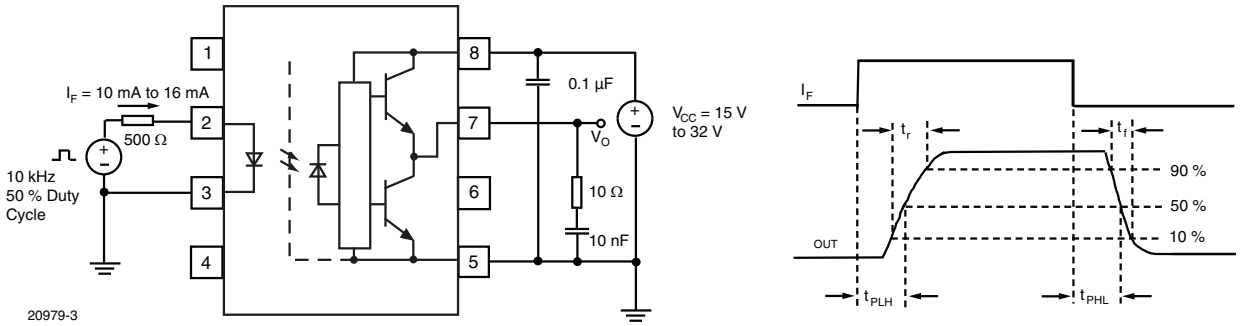

Fig. 2 - t_{PLH}, t_{PHL}, t_r and t_f Test Circuit and Waveforms

COMMON MODE TRANSIENT IMMUNITY

PARAMETER	TEST CONDITION	SYMBOL	MIN.	TYP.	MAX.	UNIT
Common mode transient immunity at logic high output	T_{amb} = 25 °C, I_F = 10 mA to 16 mA, V_{CM} = 1500 V, V_{CC} = 32 V	$\|CM_H\|$	25	50	-	kV/µs
Common mode transient immunity at logic low output	T_{amb} = 25 °C, V_{CM} = 1500 V, V_{CC} = 32 V, V_F = 0 V	$\|CM_L\|$	25	45	-	kV/µs

Note

- Minimum and maximum values were tested over recommended operating conditions (T_{amb} = -40 °C to +100 °C, $I_{F(ON)}$ = 10 mA to 16 mA, $V_{F(OFF)}$ = -3 V to 0.8 V, V_{CC} = 15 V to 32 V, V_{EE} = ground) unless otherwise specified. Typical values are characteristics of the device and are the result of engineering evaluations. Typical values are for information only and are not part of the testing requirements. All typical values were measured at T_{amb} = 25 °C and with V_{CC} - V_{EE} = 32 V.

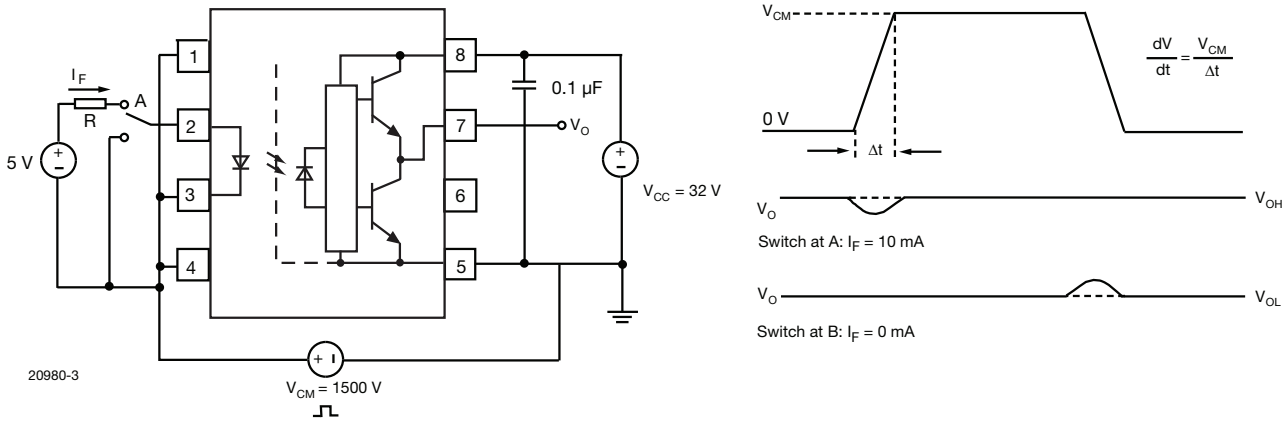

Fig. 3 - CMR Test Circuit and Waveforms

For technical questions, contact: optocoupleranswers@vishay.com
THIS DOCUMENT IS SUBJECT TO CHANGE WITHOUT NOTICE. THE PRODUCTS DESCRIBED HEREIN AND THIS DOCUMENT ARE SUBJECT TO SPECIFIC DISCLAIMERS, SET FORTH AT www.vishay.com/doc?91000

SAFETY AND INSULATION RATINGS (T_{amb} = 25 °C, unless otherwise specified)				
PARAMETER	**TEST CONDITION**	**SYMBOL**	**VALUE**	**UNIT**
Climatic classification	According to IEC 68 part 1		40 / 100 / 21	
Pollution degree	According to DIN VDE 0109		2	
Comparative tracking index	Insulation group IIIa	CTI	250	
Maximum rated withstanding isolation voltage	According to UL1577, t = 1 min	V_{ISO}	5300	V_{RMS}
Maximum transient isolation voltage	According to DIN EN 60747-5-5	V_{IOTM}	8000	V_{peak}
Maximum repetitive peak isolation voltage	According to DIN EN 60747-5-5	V_{IORM}	1414	V_{peak}
Isolation resistance	T_{amb} = 25 °C, V_{IO} = 500 V	R_{IO}	$\geq 10^{12}$	Ω
	T_{amb} = 100 °C, V_{IO} = 500 V	R_{IO}	$\geq 10^{11}$	Ω
Output safety power		P_{SO}	800	mW
Input safety current		I_{SI}	350	mA
Input safety temperature		T_S	175	°C
Creepage distance	DIP-8, widebody, 400 mil		≥ 10	mm
Clearance distance			≥ 10	mm
Creepage distance	SMD-8, widebody, 400 mil (option 7)		≥ 10	mm
Clearance distance			≥ 10	mm
Insulation thickness		DTI	≥ 0.4	mm
Input to output test voltage, method B	V_{IORM} x 1.875 = V_{PR}, 100 % production test with t_M = 1 s, partial discharge < 5 pC	V_{PR}	2651	V_{peak}
Input to output test voltage, method A	V_{IORM} x 1.6 = V_{PR}, 100 % sample test with t_M = 10 s, partial discharge < 5 pC	V_{PR}	2262	V_{peak}

Note

- According to DIN EN60747-5-5 (see figure 4). This optocoupler is suitable for safe electrical isolation only within the safety ratings. Compliance with the safety ratings shall be ensured by means of suitable protective circuits.

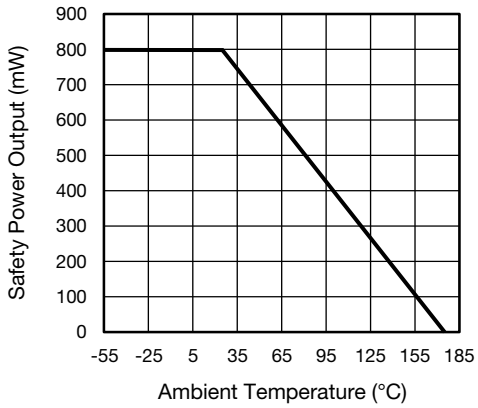

Fig. 4 - Safety Power Dissipation vs. Ambient Temperature

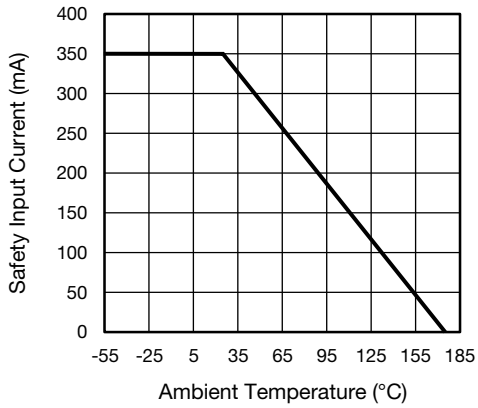

Fig. 5 - Safety Input Current vs. Ambient Temperature

For technical questions, contact: optocoupleranswers@vishay.com
THIS DOCUMENT IS SUBJECT TO CHANGE WITHOUT NOTICE. THE PRODUCTS DESCRIBED HEREIN AND THIS DOCUMENT ARE SUBJECT TO SPECIFIC DISCLAIMERS, SET FORTH AT www.vishay.com/doc?91000

TYPICAL CHARACTERISTICS (T_{amb} = 25 °C, unless otherwise specified)

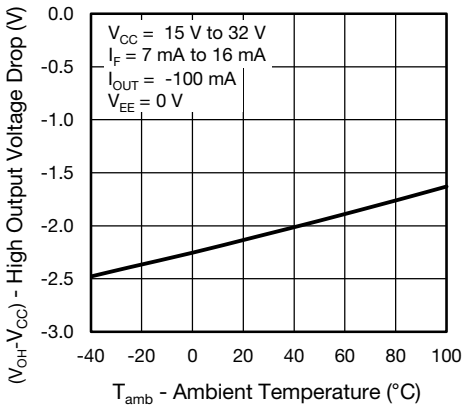

Fig. 6 - High Output Voltage Drop vs. Ambient Temperature

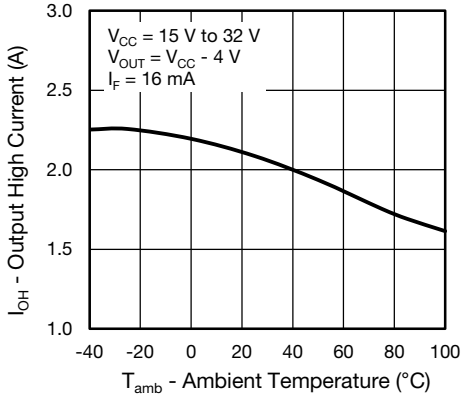

Fig. 7 - Output High Current vs. Ambient Temperature

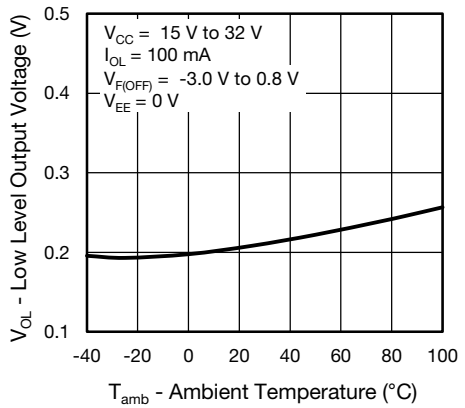

Fig. 8 - Low Level Output Voltage vs. Ambient Temperature

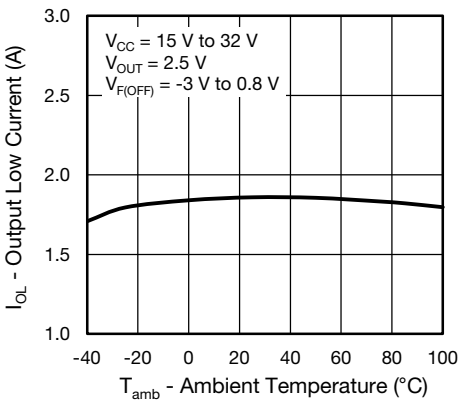

Fig. 9 - Output Low Current vs. Ambient Temperature

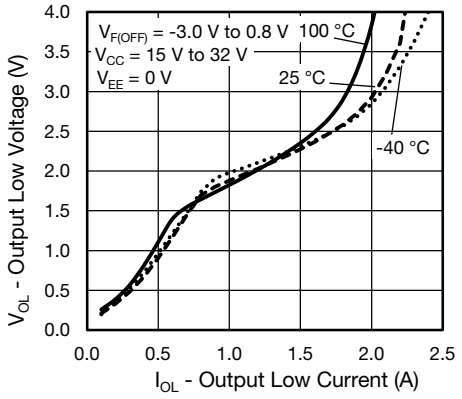

Fig. 10 - Output Low Voltage vs. Output Low Current

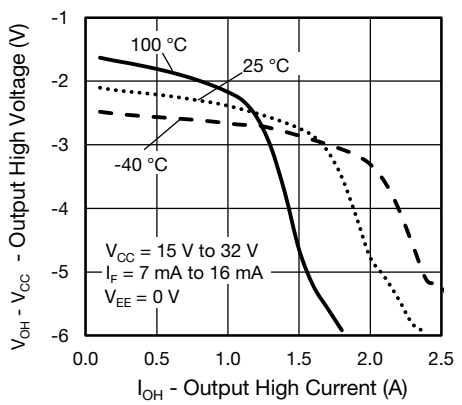

Fig. 11 - Output High Voltage vs. Output High Current

For technical questions, contact: optocoupleranswers@vishay.com
THIS DOCUMENT IS SUBJECT TO CHANGE WITHOUT NOTICE. THE PRODUCTS DESCRIBED HEREIN AND THIS DOCUMENT ARE SUBJECT TO SPECIFIC DISCLAIMERS, SET FORTH AT www.vishay.com/doc?91000

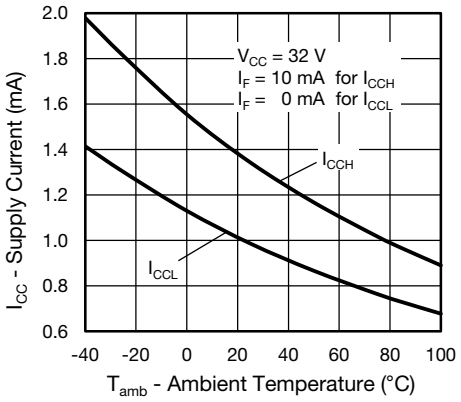

Fig. 12 - Supply Current vs. Ambient Temperature

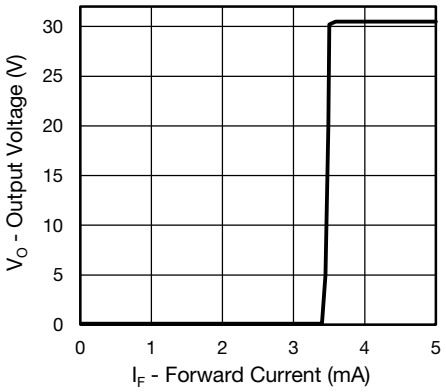

Fig. 15 - Output Voltage vs. Forward Current

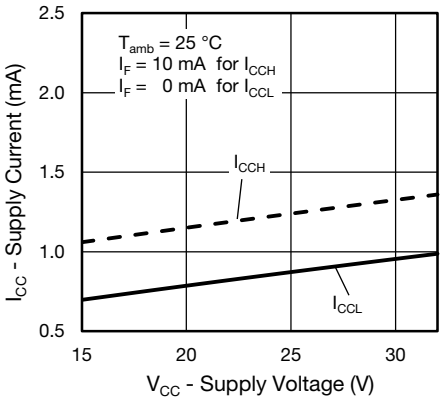

Fig. 13 - Supply Current vs. Supply Voltage

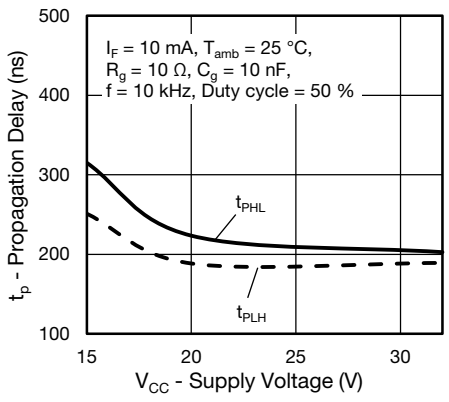

Fig. 16 - Propagation Delay vs. Supply Voltage

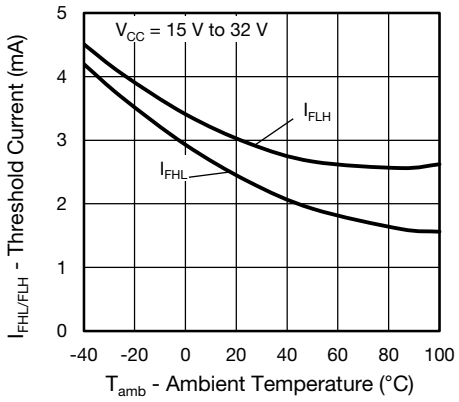

Fig. 14 - threshold Current vs. Ambient Temperature

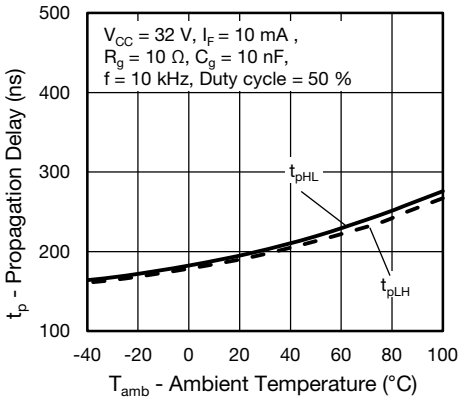

Fig. 17 - Propagation Delay vs. Ambient Temperature

For technical questions, contact: optocoupleranswers@vishay.com
THIS DOCUMENT IS SUBJECT TO CHANGE WITHOUT NOTICE. THE PRODUCTS DESCRIBED HEREIN AND THIS DOCUMENT ARE SUBJECT TO SPECIFIC DISCLAIMERS, SET FORTH AT www.vishay.com/doc?91000

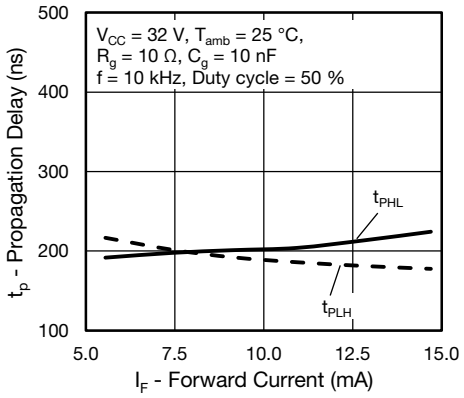

Fig. 18 - Propagation Delay vs. Forward Current

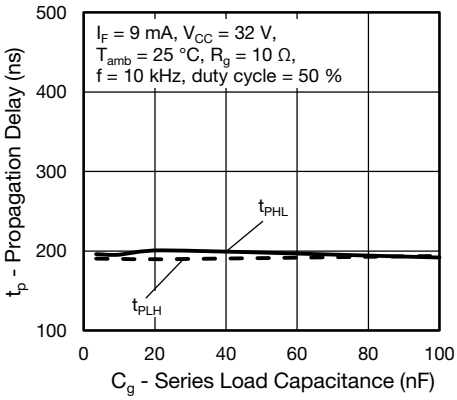

Fig. 20 - Propagation Delay vs. Series Load Capacitance

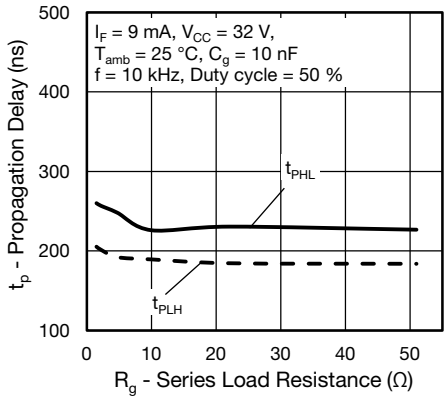

Fig. 19 - Propagation Delay vs. Series Load Resistance

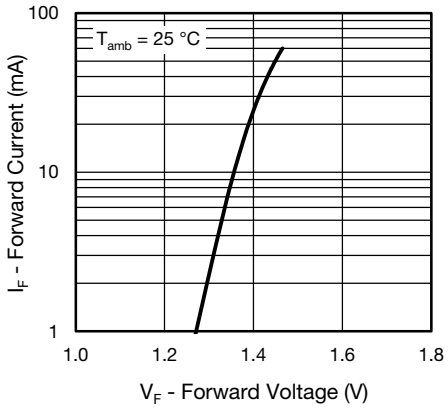

Fig. 21 - Forward Current vs. Forward Voltage

For technical questions, contact: optocoupleranswers@vishay.com
THIS DOCUMENT IS SUBJECT TO CHANGE WITHOUT NOTICE. THE PRODUCTS DESCRIBED HEREIN AND THIS DOCUMENT ARE SUBJECT TO SPECIFIC DISCLAIMERS, SET FORTH AT www.vishay.com/doc?91000

PACKAGE DIMENSIONS (in millimeters)

DIP-8, Widebody, 400 mil

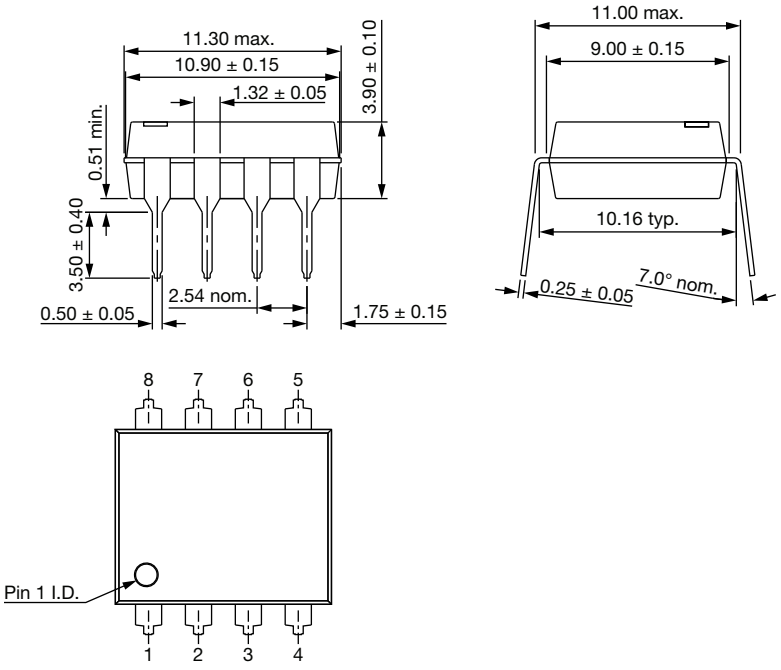

SMD-8, Widebody, 400 mil (option 7)

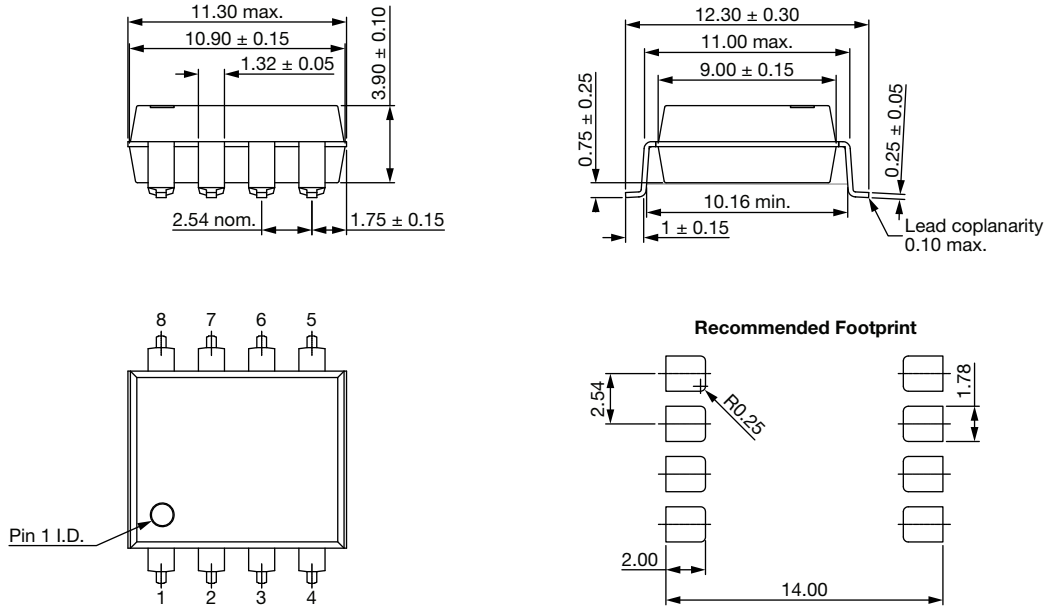

For technical questions, contact: optocoupleranswers@vishay.com
THIS DOCUMENT IS SUBJECT TO CHANGE WITHOUT NOTICE. THE PRODUCTS DESCRIBED HEREIN AND THIS DOCUMENT ARE SUBJECT TO SPECIFIC DISCLAIMERS, SET FORTH AT www.vishay.com/doc?91000

PACKAGE MARKING

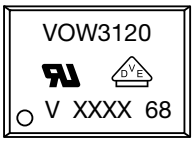

Fig. 22 - Example of VOW3120-X017T

Notes

- XXXX = LMC (lot marking code)
- The VDE logo is only marked on option 1 parts
- Tape and reel (T) and package option (option 7) is not part of the package markings

PACKING INFORMATION (in millimeters)

Tubes

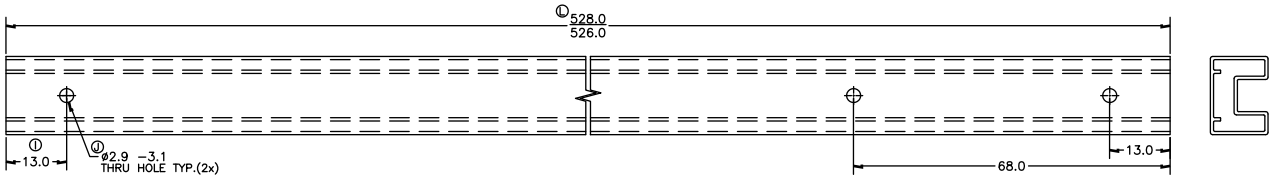

DEVICE PER TUBE			
TYPE	**UNITS/TUBE**	**TUBE/BOX**	**UNITS/BOX**
DIP-8, widebody, 400 mil	40	30	1200

DIP-8, Widebody, 400 mil

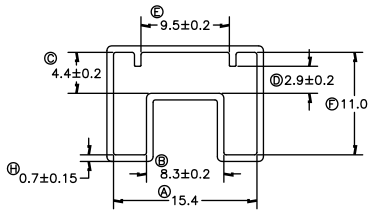

1. ALL TUBE TOLERANCES TO BE ±0.25 UNLESS OTHERWISE SPECIFIED.
2. ALL RADII AND ANGLES REFERENCE ONLY, UNLESS OTHERWISE SPECIFIED.

Fig. 23 - Tape and Reel Shipping Medium

Tape and Reel

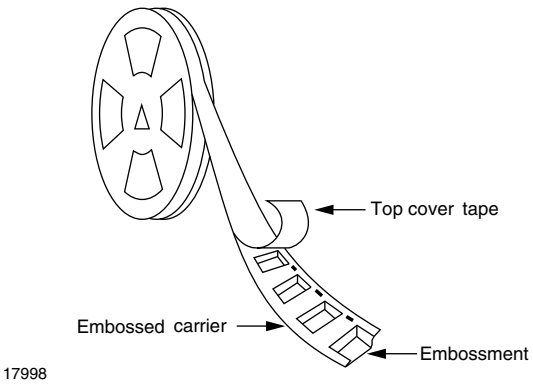

Fig. 24 - Tape and Reel Shipping Medium

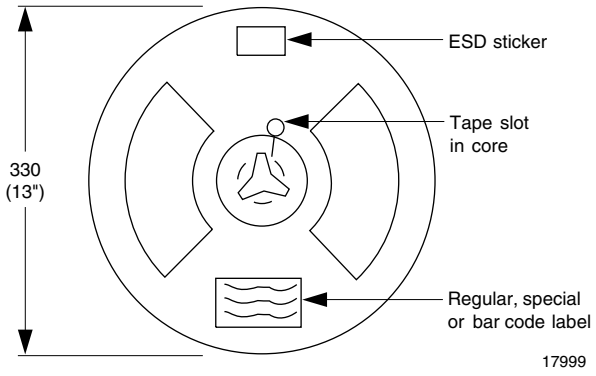

Fig. 25 - Tape and Reel Shipping Medium

For technical questions, contact: optocoupleranswers@vishay.com
THIS DOCUMENT IS SUBJECT TO CHANGE WITHOUT NOTICE. THE PRODUCTS DESCRIBED HEREIN AND THIS DOCUMENT ARE SUBJECT TO SPECIFIC DISCLAIMERS, SET FORTH AT www.vishay.com/doc?91000

SMD-8, Widebody, 400 mil (option 7)

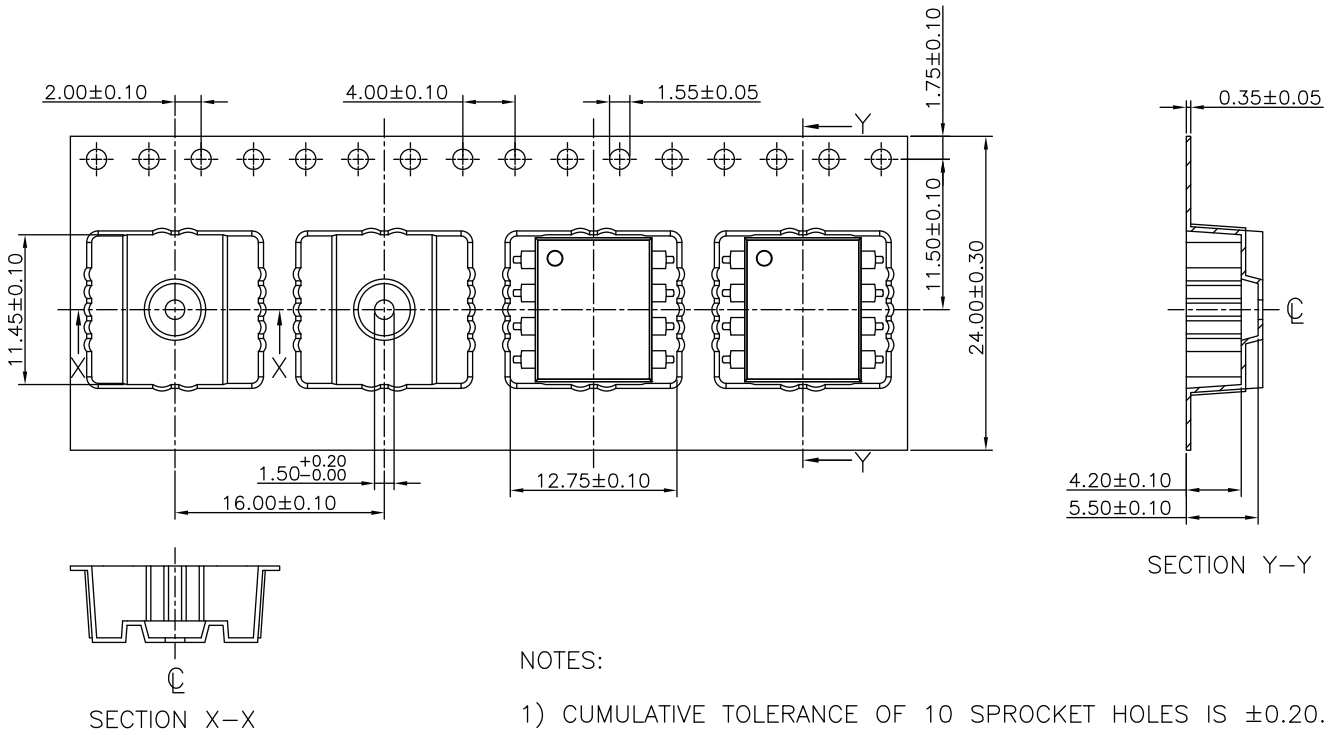

Fig. 26 - Tape and Reel Packing (750 parts per reel)

SOLDER PROFILES

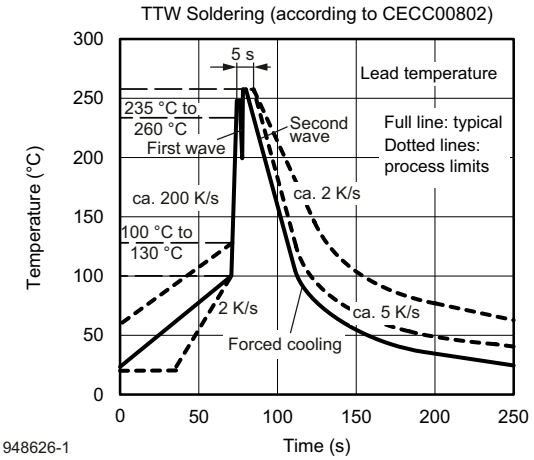

Fig. 27 - Wave Soldering Double Wave Profile According to J-STD-020 for DIP Devices

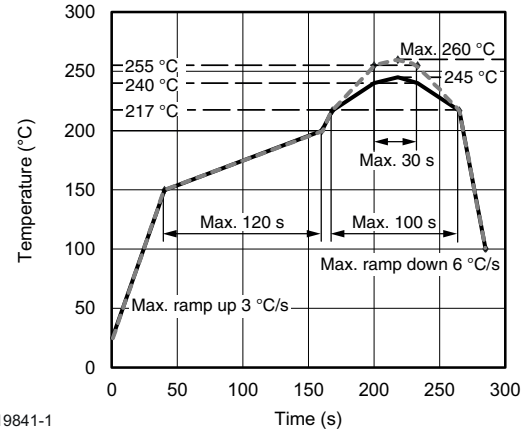

Fig. 28 - Lead (Pb)-free Reflow Solder Profile According to J-STD-020 for SMD Devices

HANDLING AND STORAGE CONDITIONS

ESD level: HBM class 2

Floor life: unlimited

Conditions: T_{amb} < 30 °C, RH < 85 %

Moisture sensitivity level 1, according to J-STD-020

For technical questions, contact: optocoupleranswers@vishay.com
THIS DOCUMENT IS SUBJECT TO CHANGE WITHOUT NOTICE. THE PRODUCTS DESCRIBED HEREIN AND THIS DOCUMENT ARE SUBJECT TO SPECIFIC DISCLAIMERS, SET FORTH AT www.vishay.com/doc?91000

Disclaimer

ALL PRODUCT, PRODUCT SPECIFICATIONS AND DATA ARE SUBJECT TO CHANGE WITHOUT NOTICE TO IMPROVE RELIABILITY, FUNCTION OR DESIGN OR OTHERWISE.

Vishay Intertechnology, Inc., its affiliates, agents, and employees, and all persons acting on its or their behalf (collectively, “Vishay”), disclaim any and all liability for any errors, inaccuracies or incompleteness contained in any datasheet or in any other disclosure relating to any product.

Vishay makes no warranty, representation or guarantee regarding the suitability of the products for any particular purpose or the continuing production of any product. To the maximum extent permitted by applicable law, Vishay disclaims (i) any and all liability arising out of the application or use of any product, (ii) any and all liability, including without limitation special, consequential or incidental damages, and (iii) any and all implied warranties, including warranties of fitness for particular purpose, non-infringement and merchantability.

Statements regarding the suitability of products for certain types of applications are based on Vishay's knowledge of typical requirements that are often placed on Vishay products in generic applications. Such statements are not binding statements about the suitability of products for a particular application. It is the customer's responsibility to validate that a particular product with the properties described in the product specification is suitable for use in a particular application. Parameters provided in datasheets and / or specifications may vary in different applications and performance may vary over time. All operating parameters, including typical parameters, must be validated for each customer application by the customer's technical experts. Product specifications do not expand or otherwise modify Vishay's terms and conditions of purchase, including but not limited to the warranty expressed therein.

Hyperlinks included in this datasheet may direct users to third-party websites. These links are provided as a convenience and for informational purposes only. Inclusion of these hyperlinks does not constitute an endorsement or an approval by Vishay of any of the products, services or opinions of the corporation, organization or individual associated with the third-party website. Vishay disclaims any and all liability and bears no responsibility for the accuracy, legality or content of the third-party website or for that of subsequent links.

Vishay products are not designed for use in life-saving or life-sustaining applications or any application in which the failure of the Vishay product could result in personal injury or death unless specifically qualified in writing by Vishay. Customers using or selling Vishay products not expressly indicated for use in such applications do so at their own risk. Please contact authorized Vishay personnel to obtain written terms and conditions regarding products designed for such applications.

No license, express or implied, by estoppel or otherwise, to any intellectual property rights is granted by this document or by any conduct of Vishay. Product names and markings noted herein may be trademarks of their respective owners.

© 2024 VISHAY INTERTECHNOLOGY, INC. ALL RIGHTS RESERVED

THIS DOCUMENT IS SUBJECT TO CHANGE WITHOUT NOTICE. THE PRODUCTS DESCRIBED HEREIN AND THIS DOCUMENT ARE SUBJECT TO SPECIFIC DISCLAIMERS, SET FORTH AT www.vishay.com/doc?91000