1/2" (12.7 mm) Conductive Plastic and Cermet Potentiometers

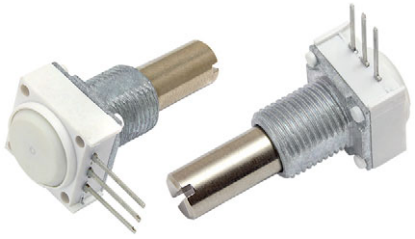

FEATURES

- Model 248: 0.5 W at 70 °C (conductive plastic element)
- Model 249: 1 W at 70 °C (cermet element)
- Cost effective panel potentiometer
- PCB mounting
- Tests according to CECC 41000 or IEC 60393-1
- Material categorization: for definitions of compliance please see www.vishay.com/doc?99912

RoHS COMPLIANT

QUICK REFERENCE DATA	
Multiple module	No
Switch module	n/a
Detent module	n/a
Special electrical laws	A: linear, L: logarithmic
Sealing level	IP 50
Lifespan	10K cycles

DIMENSIONS in millimeters (inches) ± 0.5 mm (± 0.02")

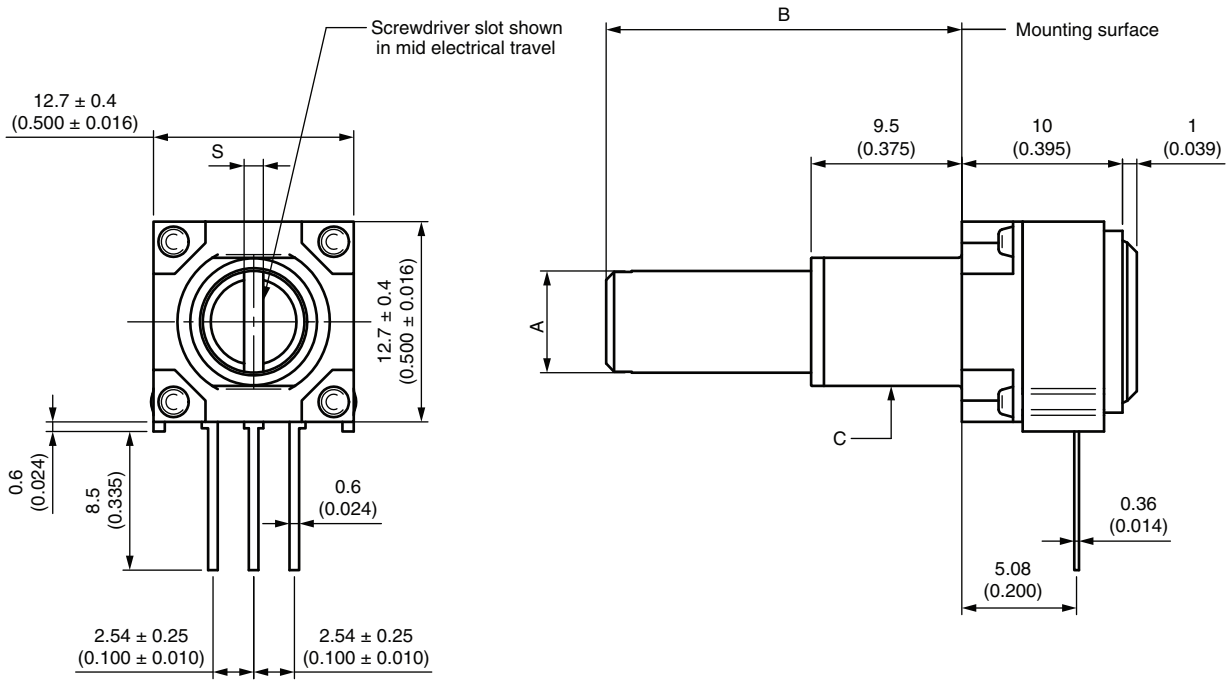

VERSION BUSHING / SHAFT	A	B	C	S
	SHAFT		BUSHING	SCREWDRIVER
	Ø	L	Ø	SLOT
B / BH	1/8"	3/4"	1/4"	0.8
F / GJ	1/4"	7/8"	3/8"	1.2

For technical questions, contact: sferpottrimmers@vishay.com

THIS DOCUMENT IS SUBJECT TO CHANGE WITHOUT NOTICE. THE PRODUCTS DESCRIBED HEREIN AND THIS DOCUMENT ARE SUBJECT TO SPECIFIC DISCLAIMERS, SET FORTH AT www.vishay.com/doc?91000

ELECTRICAL SPECIFICATIONS

PARAMETER	MODEL 248	MODEL 249
Element type	Conductive plastic	Cermet
Total resistance range	1 kΩ to 500 kΩ	500 Ω to 1 MΩ
Standard series	1, 2, 5	
Resistance tolerance	± 20 %	± 20 % (on request ± 10 %)
Power rating Linear	0.5 W at 70 °C	1.0 W at 70 °C
	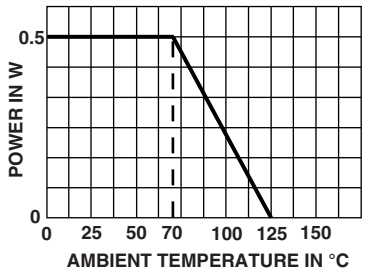	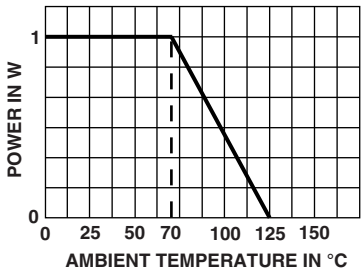
Circuit diagram	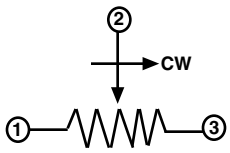	
Temperature coefficient of resistance (typical)	± 500 ppm/°C	± 150 ppm/°C
Linearity (typical)	± 5 % independent	
Limiting element voltage	300 V	
Contact resistance variation (typical)	5 % of the total resistance	
Insulation resistance	1000 MΩ minimum, 500 V_{DC}	
Dielectric strength	750 V_{RMS} minimum 50 Hz / 60 Hz	
End resistance	2 Ω maximum each end	
Effective electrical travel	265° ± 5°	

MECHANICAL SPECIFICATIONS

Mechanical travel	295° ± 5°
Operating torque	0.1 Ncm to 2 Ncm
End stop torque	35 Ncm (50 oz.-inch)
Max. tightening torque	150 Ncm
Weight	8.3 g (0.29 oz.) (1/4" x 7/8" FMF metal shaft)

ENVIRONMENTAL SPECIFICATIONS

Temperature range	-55 °C to +125 °C
Climatic category	55 / 125 / 4
Sealing	IP 50

MARKING

- Vishay model
- Vishay logo
- Variation law
- SAP code for ohmic value
- Tolerance in %
- Date code (4 digits)
- Terminal identification “3” for lead 3

PACKAGING

- In box of 25 pieces, code BO25

Note

- Hardware supplied in separate bags

For technical questions, contact: sferpottrimmers@vishay.com

THIS DOCUMENT IS SUBJECT TO CHANGE WITHOUT NOTICE. THE PRODUCTS DESCRIBED HEREIN AND THIS DOCUMENT ARE SUBJECT TO SPECIFIC DISCLAIMERS, SET FORTH AT www.vishay.com/doc?91000

PERFORMANCE

TESTS	CONDITIONS	TYPICAL VALUES AND DRIFTS FOR 249		
		$\Delta R_T/R_T$ (%)	$\Delta R_{1\text{-}2}/R_{1\text{-}2}$ (%)	OTHER
Electrical endurance	1000 h at rated power 90'/30' - ambient temp. 70 °C	± 3 %	± 5 %	Contact res. variation: < 1 %
Damp heat, steady state	4 days 40 °C 93 % HR	± 2 %	-	Dielectric strength: 1000 V_{RMS} Insulation resistance: > 10^4 MΩ
Change of temperature	5 cycles, -55 °C at +125 °C	± 1 %	-	$\Delta V_{1\text{-}2}/V_{1\text{-}3} \leq \pm 2$ %
Mechanical endurance	10 000 cycles	± 3 %	-	Contact res. variation: ≤ 2 % Rn
Shock	50 *g*'s at 11 ms 3 successive shocks in 3 directions	± 1 %	± 2 %	-
Vibration	10 Hz to 55 Hz, 0.75 mm or 10 *g*'s during 6 h	± 1 %	-	$\Delta V_{1\text{-}2}/V_{1\text{-}3} \leq \pm 2$ %

Note

- Nothing stated herein shall be construed as a guarantee of quality or durability

STANDARD RESISTANCE ELEMENT DATA

STANDARD RESISTANCE VALUES	248 LINEAR TAPER			249 LINEAR TAPER		
	MAX. POWER AT 70 °C	MAX. WORKING VOLTAGE	MAX. WIPER CURRENT	MAX. POWER AT 70 °C	MAX. WORKING VOLTAGE	MAX. WIPER CURRENT
Ω	W	V	mA	W	V	mA
500	0.5	15.8	32	1	22.4	45
1K	0.5	22.4	22	1	31.6	32
2K	0.5	31.6	16	1	44.7	22
2.5K	0.5	35.4	14	1	50.0	20
5K	0.5	50.0	10	1	70.7	14
10K	0.5	70.7	7	1	100	10
20K	0.5	100	5.0	1	141	7
25K	0.5	112	4.5	1	158	6
50K	0.5	158	3.2	1	224	4
100K	0.5	224	2.2	0.90	300	3.0
200K	0.45	300	1.50	0.45	300	1.5
250K	0.36	300	1.20	0.36	300	1.2
500K	0.18	300	0.60	0.18	300	0.6
1M	0.09	300	0.30	0.09	300	0.3

For technical questions, contact: sferpottrimmers@vishay.com

THIS DOCUMENT IS SUBJECT TO CHANGE WITHOUT NOTICE. THE PRODUCTS DESCRIBED HEREIN AND THIS DOCUMENT ARE SUBJECT TO SPECIFIC DISCLAIMERS, SET FORTH AT www.vishay.com/doc?91000

ORDERING INFORMATION (part number)

2	4	8	F	G	J	S	0	X	B	2	5	2	5	2	M	A

MODEL

248 = plastic conductive
249 = cermet element

BUSHING

F = Ø 3/8"
B = Ø 1/4"

SHAFT

	Ø	L
GJ	1/4"	7/8"
BH	1/8"	3/4"

SHAFT END

S = slotted
R = round
F = flatted

SHAFT MATERIAL

0 or P = metal

LEADS

X = std

PACKAGING

B25 = box of 25 pieces

RESISTANCE CODE / TOLERANCE / TAPER OR SPECIAL

Resistance:
From 501 = 500 Ω
to 105 = 1 MΩ

Tolerance:
M = 20 %;
On request:
K = 10 % (249 only)

Taper:
A = linear;
L = logarithmic

ACCESSORIES

Additional Accessories (to order separately)	www.vishay.com/doc?51051
Control knobs	www.vishay.com/doc?51101

RELATED DOCUMENTS

APPLICATION NOTES	
Potentiometers and Trimmers	www.vishay.com/doc?51001
Guidelines for Vishay Sfernice Resistive and Inductive Components	www.vishay.com/doc?52029

For technical questions, contact: sferpottrimmers@vishay.com

THIS DOCUMENT IS SUBJECT TO CHANGE WITHOUT NOTICE. THE PRODUCTS DESCRIBED HEREIN AND THIS DOCUMENT ARE SUBJECT TO SPECIFIC DISCLAIMERS, SET FORTH AT www.vishay.com/doc?91000

Disclaimer

ALL PRODUCT, PRODUCT SPECIFICATIONS AND DATA ARE SUBJECT TO CHANGE WITHOUT NOTICE TO IMPROVE RELIABILITY, FUNCTION OR DESIGN OR OTHERWISE.

Vishay Intertechnology, Inc., its affiliates, agents, and employees, and all persons acting on its or their behalf (collectively, “Vishay”), disclaim any and all liability for any errors, inaccuracies or incompleteness contained in any datasheet or in any other disclosure relating to any product.

Vishay makes no warranty, representation or guarantee regarding the suitability of the products for any particular purpose or the continuing production of any product. To the maximum extent permitted by applicable law, Vishay disclaims (i) any and all liability arising out of the application or use of any product, (ii) any and all liability, including without limitation special, consequential or incidental damages, and (iii) any and all implied warranties, including warranties of fitness for particular purpose, non-infringement and merchantability.

Statements regarding the suitability of products for certain types of applications are based on Vishay's knowledge of typical requirements that are often placed on Vishay products in generic applications. Such statements are not binding statements about the suitability of products for a particular application. It is the customer's responsibility to validate that a particular product with the properties described in the product specification is suitable for use in a particular application. Parameters provided in datasheets and / or specifications may vary in different applications and performance may vary over time. All operating parameters, including typical parameters, must be validated for each customer application by the customer's technical experts. Product specifications do not expand or otherwise modify Vishay's terms and conditions of purchase, including but not limited to the warranty expressed therein.

Hyperlinks included in this datasheet may direct users to third-party websites. These links are provided as a convenience and for informational purposes only. Inclusion of these hyperlinks does not constitute an endorsement or an approval by Vishay of any of the products, services or opinions of the corporation, organization or individual associated with the third-party website. Vishay disclaims any and all liability and bears no responsibility for the accuracy, legality or content of the third-party website or for that of subsequent links.

Vishay products are not designed for use in life-saving or life-sustaining applications or any application in which the failure of the Vishay product could result in personal injury or death unless specifically qualified in writing by Vishay. Customers using or selling Vishay products not expressly indicated for use in such applications do so at their own risk. Please contact authorized Vishay personnel to obtain written terms and conditions regarding products designed for such applications.

No license, express or implied, by estoppel or otherwise, to any intellectual property rights is granted by this document or by any conduct of Vishay. Product names and markings noted herein may be trademarks of their respective owners.

© 2025 VISHAY INTERTECHNOLOGY, INC. ALL RIGHTS RESERVED

THIS DOCUMENT IS SUBJECT TO CHANGE WITHOUT NOTICE. THE PRODUCTS DESCRIBED HEREIN AND THIS DOCUMENT ARE SUBJECT TO SPECIFIC DISCLAIMERS, SET FORTH AT www.vishay.com/doc?91000