Fully Sealed Potentiometer Professional Grade

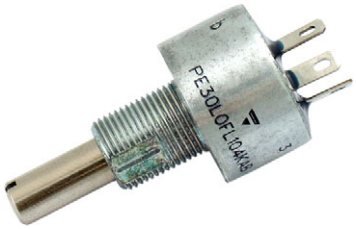

FEATURES

- High power rating 3 W at 70 °C
- Low temperature coefficient (150 ppm/°C typical)
- Cermet element
- Full sealing
- Use of faston 2.86 connections
- Tests according to CECC 41000 or IEC 60393-1
- Wires and connectors available
- Custom design on request
- Center detent option
- Material categorization: for definitions of compliance please see www.vishay.com/doc?99912

RoHS COMPLIANT

LINKS TO ADDITIONAL RESOURCES

3D Models

Capabilities and Custom Options

QUICK REFERENCE DATA	
Multiple module	No
Switch module	n/a
Detent module	Yes
Special electrical laws	A: linear, L: logarithmic, F: reverse logarithmic
Sealing level	IP 67
Lifespan	25K cycles

DIMENSIONS in millimeters (inches) ± 0.5 mm (± 0.02")

PE30L

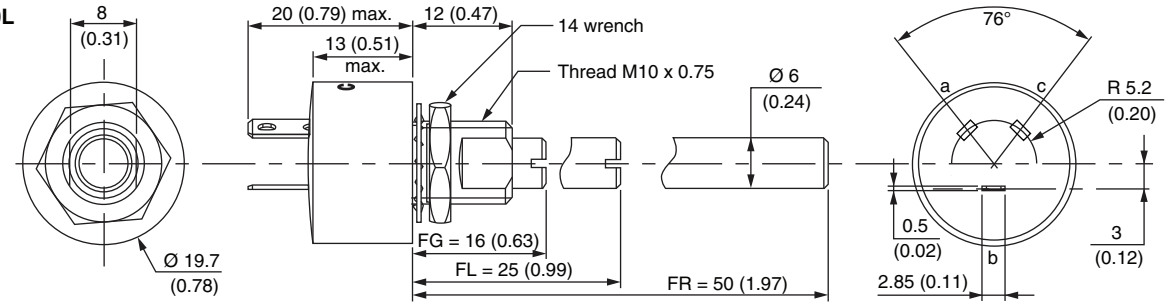

PE30LL: LPRP - Locating Peg

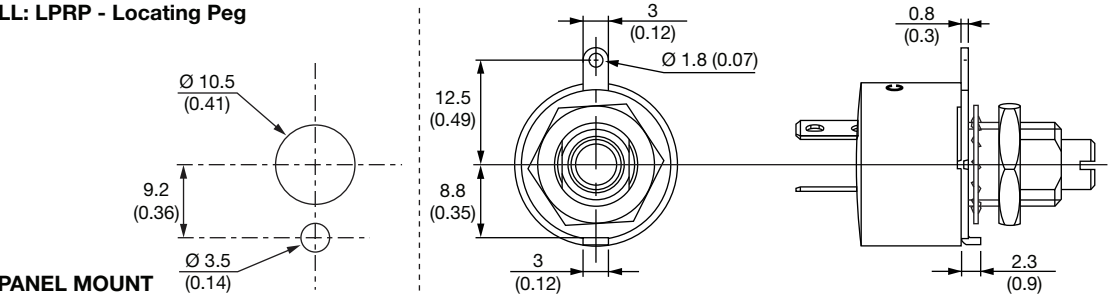

PANEL MOUNT

PE30ME: Panel Sealed

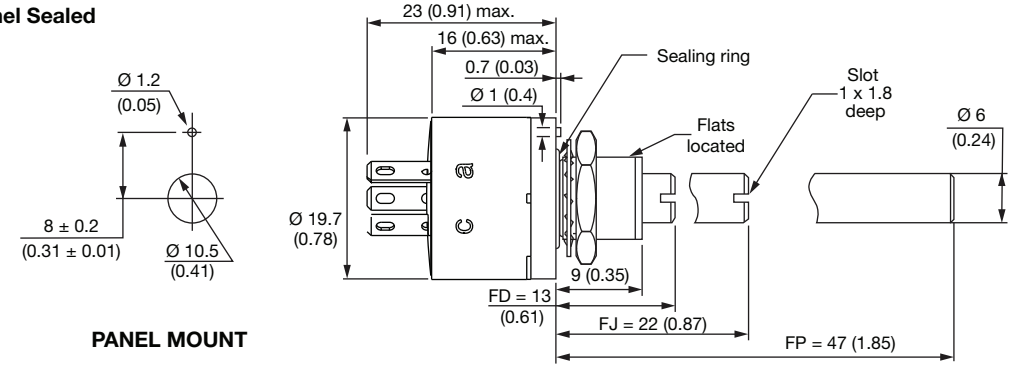

PANEL MOUNT

For technical questions, contact: sferpottrimmers@vishay.com

THIS DOCUMENT IS SUBJECT TO CHANGE WITHOUT NOTICE. THE PRODUCTS DESCRIBED HEREIN AND THIS DOCUMENT ARE SUBJECT TO SPECIFIC DISCLAIMERS, SET FORTH AT www.vishay.com/doc?91000

ELECTRICAL SPECIFICATIONS		
Resistive element		Cermet
Electrical travel		270° ± 10°
Resistance range	Linear taper	22 Ω to 10 MΩ
	Logarithmic taper	100 Ω to 2.2 MΩ
Standard series E3		1 - 2.2 - 4.7 and on request 1 - 2 - 5
Tolerance	Standard	± 20 %
	On request	± 10 % to ± 5 %
Taper		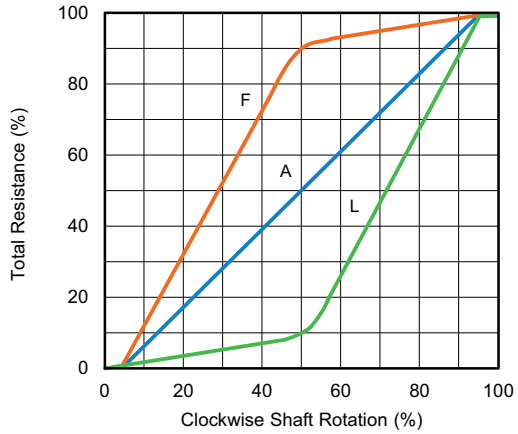
Power rating	Linear	3 W at 70 °C
	Logarithmic	1.5 W at 70 °C
		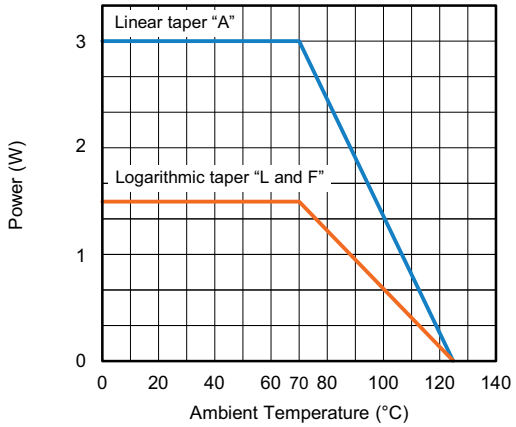
Circuit diagram		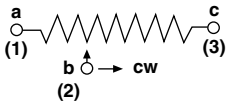
Temperature coefficient (typical)		± 150 ppm/°C
Limiting element voltage		300 V
Contact resistance variation (typical)		3 % Rn or 3 Ω
End resistance (typical)		1 Ω
Dielectric strength (RMS)		2500 V
Insulation resistance (300 V_{DC})		10^5 MΩ
Independent linearity (typical)		± 5 %

For technical questions, contact: sferpottrimmers@vishay.com

THIS DOCUMENT IS SUBJECT TO CHANGE WITHOUT NOTICE. THE PRODUCTS DESCRIBED HEREIN AND THIS DOCUMENT ARE SUBJECT TO SPECIFIC DISCLAIMERS, SET FORTH AT www.vishay.com/doc?91000

STANDARD RESISTANCE ELEMENT DATA

STANDARD RESISTANCE VALUES	LINEAR TAPER			LOGS TAPER		
	MAX. POWER AT 70 °C	MAX. WORKING VOLTAGE	MAX. CUR. THROUGH WIPER	MAX. POWER AT 70 °C	MAX. WORKING VOLTAGE	MAX. CUR. THROUGH WIPER
Ω	W	V	mA	W	V	mA
22	3	8.1	369			
47	3	11.9	252			
100	3	17.3	173	1.5	12.2	122
220	3	25.7	116	1.5	18.2	82.6
470	3	37.5	79	1.5	26.6	56.6
1K	3	54.8	54	1.5	38.7	38.7
2.2K	3	81.2	37	1.5	57.4	26.1
4.7K	3	118.7	25	1.5	83.9	17.9
10K	3	173.2	17	1.5	122	12.2
22K	3	256.9	11	1.5	181.6	8.25
47K	1.91	299.6	6.3	1.5	265	5.64
100K	0.90	300.0	3	0.9	300	3
220K	0.41	300.0	1.36	0.41	300	1.36
470K	0.19	298.8	0.63	0.19	300	0.63
1M	0.09	300.0	0.3	0.09	300	0.30
2.2M	0.04	296.6	0.13	0.04	300	0.13
4.7M	0.02	300.0	0.06			
10M	0.01	300.0	0.03			

MECHANICAL SPECIFICATIONS

Mechanical travel	300° ± 5°	
Operating torque / typical value	2 Ncm	2.83 oz.-inch
End stop torque	70 Ncm max.	6.51 lb oz.-inch max.
Tightening torque of mounting nut	250 Ncm max.	22 lb-inch max.
Unit weight	23 g to 32 g max.	0.8 oz. to 1.13 oz.
Terminals	e3: pure Sn	

ENVIRONMENTAL SPECIFICATIONS

Temperature range	-55 °C to +125 °C
Climatic category	55/125/56
Sealing	Fully sealed - container IP67

OPTIONS

Special feature command shaft	Length is measured from the mounting surface to the free end of the shaft. The screwdriver slot is aligned with the wiper within ± 10°. Special shafts are available, in accordance to drawings supplied by customers. We recommend that customers should not machine tool shafts, in order to avoid damage. Bending or torsion of terminals should also be avoided.
Panel sealing (PE30M)	The panel sealing device consists of a ring located in a groove on the potentiometer face. Sealing is obtained by tightening the ring against the panel when mounting the potentiometer. Old code: PE30P
Locating peg (PE30LL)	Location is obtained by fitting a special washer on the mounting face of the potentiometer. Old code: LPRP
Shaft locking (PE30LD)	The shaft locking device consists of a tapered nut tightening a slotted notched washer against both bushing and shaft. DBAN tightening torque is 200 Ncm, shaft locking torque being 30 Ncm. DBAN is also available with all special types. This device is normally supplied in a separate bag. Can be pre-mounted on request. Assembling method 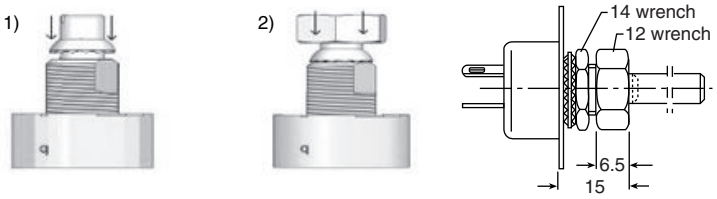

For technical questions, contact: sferpottrimmers@vishay.com
THIS DOCUMENT IS SUBJECT TO CHANGE WITHOUT NOTICE. THE PRODUCTS DESCRIBED HEREIN AND THIS DOCUMENT ARE SUBJECT TO SPECIFIC DISCLAIMERS, SET FORTH AT www.vishay.com/doc?91000

CENTER DETENT

- Stable position in mid mechanical travel
- Output ratio 50 % ± 10 %
- Rotational life: 10 000 actuations

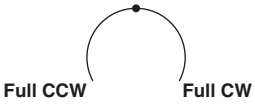

ORDERING INFORMATION (First order only)

CV1M

MARKING

- Vishay trademark
- Full ordering information (see Ordering Information table)
- Manufacturing date code
- Marking of terminals 3, and a, b, c

PERFORMANCE

TESTS	CONDITIONS	TYPICAL VALUES AND DRIFTS		
		$\Delta R_T/R_T$ (%)	$\Delta R_{1\text{-}2}/R_{1\text{-}2}$ (%)	OTHER
Electrical endurance	1000 h at rated power 90'/30' - ambient temp. 70 °C	± 1 %	-	Contact res. variation: < 3 % Rn
Climatic sequence	Phase A dry heat 125 °C Phase B damp heat Phase C cold -55 °C Phase D damp heat 5 cycles	± 0.5 %	± 1 %	-
Damp heat, steady state	56 days 40 °C 93 % HR	± 0.5 %	± 1 %	Insulation resistance: > 10^4 MΩ
Change of temperature	5 cycles -55 °C at +125 °C	± 0.5 %	-	-
Mechanical endurance	25 000 cycles	± 3 %	-	Contact res. variation: < 2 % Rn
Shock	50 *g*'s at 11 ms 3 successive shocks in 3 directions	± 0.1 %	± 0.2 %	-
Vibration	10 Hz to 55 Hz 0.75 mm or 10 *g*'s during 6 h	± 0.1 %	± 0.2 %	-

Note

- Nothing stated herein shall be construed as a guarantee of quality or durability

For technical questions, contact: sferpottrimmers@vishay.com

THIS DOCUMENT IS SUBJECT TO CHANGE WITHOUT NOTICE. THE PRODUCTS DESCRIBED HEREIN AND THIS DOCUMENT ARE SUBJECT TO SPECIFIC DISCLAIMERS, SET FORTH AT www.vishay.com/doc?91000

ORDERING INFORMATION (part number)

P	E	3	0	L	B	F	G	2	0	4	M	A	B				

MODEL	BUSHING	OPTION	SHAFT	OHMIC VALUE	TOLERANCE	TAPER	PACKAGING	SPECIAL NUMBER
PE30	L = M10 x 0.75 M = panel sealed M10 x 0.75	0 = none For L bushing D = DBAN L = LPRP B = DBAN and LPRP For M bushing E = peg A = peg and DBAN	For L bushing (= old codes:) FG 16 mm, slotted = AC FL 25 mm, slotted = AM FR 50 mm, plain = AL For M bushing FD = 13 mm, slotted = AC FJ = 22 mm, slotted = AM FP = 47 mm, plain = AL AP = custom shaft	A law = from 22 Ω to 10 MΩ L and F laws = from 100 Ω to 2.2 MΩ	M = ± 20 % On request: K = ± 10 % J = ± 5 %	A = linear L = clockwise logarithmic F = clockwise inverse logarithmic	B = box of 10 pieces	(if applicable) Given by Vishay for custom design or E105 CV1M

PART NUMBER DESCRIPTION (for information only)

PE30		LPRP	AC	200K	20 %	A	DBAN		CV1M	BO			e3
MODEL	FEATURES	OPTION	SHAFT	VALUE	TOL.	TAPER	OPTION	SPECIAL	DETENT	PACKAGING	CUSTOM SHAFT	SPECIAL	LEAD (Pb)-FREE

ACCESSORIES

Additional Accessories (to order separately)	www.vishay.com/doc?51051

RELATED DOCUMENTS

APPLICATION NOTES	
Potentiometers and Trimmers	www.vishay.com/doc?51001
Guidelines for Vishay Sfernice Resistive and Inductive Components	www.vishay.com/doc?52029
Capabilities and Custom Options	www.vishay.com/doc?48485

For technical questions, contact: sferpottrimmers@vishay.com

THIS DOCUMENT IS SUBJECT TO CHANGE WITHOUT NOTICE. THE PRODUCTS DESCRIBED HEREIN AND THIS DOCUMENT ARE SUBJECT TO SPECIFIC DISCLAIMERS, SET FORTH AT www.vishay.com/doc?91000

Disclaimer

ALL PRODUCT, PRODUCT SPECIFICATIONS AND DATA ARE SUBJECT TO CHANGE WITHOUT NOTICE TO IMPROVE RELIABILITY, FUNCTION OR DESIGN OR OTHERWISE.

Vishay Intertechnology, Inc., its affiliates, agents, and employees, and all persons acting on its or their behalf (collectively, “Vishay”), disclaim any and all liability for any errors, inaccuracies or incompleteness contained in any datasheet or in any other disclosure relating to any product.

Vishay makes no warranty, representation or guarantee regarding the suitability of the products for any particular purpose or the continuing production of any product. To the maximum extent permitted by applicable law, Vishay disclaims (i) any and all liability arising out of the application or use of any product, (ii) any and all liability, including without limitation special, consequential or incidental damages, and (iii) any and all implied warranties, including warranties of fitness for particular purpose, non-infringement and merchantability.

Statements regarding the suitability of products for certain types of applications are based on Vishay's knowledge of typical requirements that are often placed on Vishay products in generic applications. Such statements are not binding statements about the suitability of products for a particular application. It is the customer's responsibility to validate that a particular product with the properties described in the product specification is suitable for use in a particular application. Parameters provided in datasheets and / or specifications may vary in different applications and performance may vary over time. All operating parameters, including typical parameters, must be validated for each customer application by the customer's technical experts. Product specifications do not expand or otherwise modify Vishay's terms and conditions of purchase, including but not limited to the warranty expressed therein.

Hyperlinks included in this datasheet may direct users to third-party websites. These links are provided as a convenience and for informational purposes only. Inclusion of these hyperlinks does not constitute an endorsement or an approval by Vishay of any of the products, services or opinions of the corporation, organization or individual associated with the third-party website. Vishay disclaims any and all liability and bears no responsibility for the accuracy, legality or content of the third-party website or for that of subsequent links.

Vishay products are not designed for use in life-saving or life-sustaining applications or any application in which the failure of the Vishay product could result in personal injury or death unless specifically qualified in writing by Vishay. Customers using or selling Vishay products not expressly indicated for use in such applications do so at their own risk. Please contact authorized Vishay personnel to obtain written terms and conditions regarding products designed for such applications.

No license, express or implied, by estoppel or otherwise, to any intellectual property rights is granted by this document or by any conduct of Vishay. Product names and markings noted herein may be trademarks of their respective owners.

© 2024 VISHAY INTERTECHNOLOGY, INC. ALL RIGHTS RESERVED

THIS DOCUMENT IS SUBJECT TO CHANGE WITHOUT NOTICE. THE PRODUCTS DESCRIBED HEREIN AND THIS DOCUMENT ARE SUBJECT TO SPECIFIC DISCLAIMERS, SET FORTH AT www.vishay.com/doc?91000