Quad SPST CMOS Analog Switches

DESCRIPTION

The DG441, DG442 monolithic quad analog switches are designed to provide high speed, low error switching of analog and audio signals. The DG441 has a normally closed function. The DG442 has a normally open function. Combining low on-resistance (50 Ω, typ.) with high speed (t_{on} 150 ns, typ.), the DG441, DG442 are ideally suited for upgrading DG201A/202 sockets. Charge injection has been minimized on the drain for use in sample-and-hold circuits.

To achieve high voltage ratings and superior switching performance, the DG441, DG442 are built on Vishay Siliconix's high-voltage silicon-gate process. An epitaxial layer prevents latchup.

Each switch conducts equally well in both directions when on, and blocks input voltages to the supply levels when off.

BENEFITS

- Less signal errors and distortion
- Reduced power supply requirements
- Faster throughput
- Improved reliability
- Reduced pedestal errors
- Simplifies retrofit
- Simple interfacing

FEATURES

- Low on-resistance: 50 Ω
- Low leakage: 80 pA
- Low power consumption: 0.2 mW
- Fast switching action - t_{on}: 150 ns
- Low charge injection - Q: - 1 pC
- DG201A/DG202 upgrades
- TTL/CMOS-compatible logic
- Single supply capability
- Material categorization: for definitions of compliance please see www.vishay.com/doc?99912

Pb-free

RoHS COMPLIANT

HALOGEN FREE

APPLICATIONS

- Audio switching
- Battery powered systems
- Data acquisition
- Hi-Rel systems
- Sample-and-hold circuits
- Communication systems
- Automatic test equipment
- Medical instruments

FUNCTIONAL BLOCK DIAGRAM AND PIN CONFIGURATION

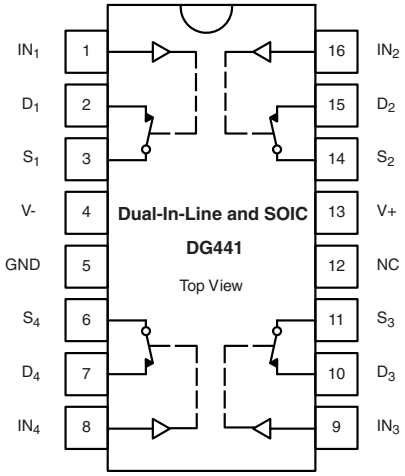

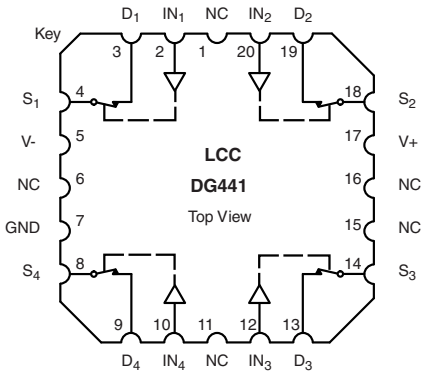

TRUTH TABLE		
LOGIC	DG441	DG442
0	On	Off
1	Off	On

Note

- Logic "0" ≤ 0.8 V
  Logic "1" ≥ 2.4 V

For technical questions, contact: analogswitchtechsupport@vishay.com

THIS DOCUMENT IS SUBJECT TO CHANGE WITHOUT NOTICE. THE PRODUCTS DESCRIBED HEREIN AND THIS DOCUMENT ARE SUBJECT TO SPECIFIC DISCLAIMERS, SET FORTH AT www.vishay.com/doc?91000

ORDERING INFORMATION		
TEMP. RANGE	**PACKAGE**	**PART NUMBER**
-40 °C to +85 °C	16-pin plastic DIP	DG441DJ DG441DJ-E3
		DG442DJ DG442DJ-E3
	16-pin narrow SOIC	DG441DY DG441DY-E3 DG441DY-T1 DG441DY-T1-E3
		DG442DY DG442DY-E3 DG442DY-T1 DG442DY-T1-E3

ABSOLUTE MAXIMUM RATINGS (T_A = 25 °C, unless otherwise noted)			
PARAMETER		**LIMIT**	**UNIT**
Voltages referenced, V+ to V-		44	V
GND to V-		25	
Digital inputs [a], V_S, V_D		(V-) - 2 to (V+) + 2 or 30 mA, whichever occurs first	
Current (any terminal)		30	mA
Peak current, S or D (pulsed at 1 ms, 10 % duty cycle max.)		100	
Storage temperature	(AK suffix)	-65 to +150	°C
	(DJ, DY suffix)	-65 to +125	°C
Power dissipation (package) [b]	16-pin plastic DIP [c]	450	mW
	16-pin CerDIP [d]	900	
	16-pin narrow SOIC [d]	900	
	LCC-20 [d]	1200	

Notes

a. Signals on SX, DX, or INX exceeding V+ or V- will be clamped by internal diodes. Limit forward diode current to maximum current ratings
b. All leads welded or soldered to PC board
c. Derate 6 mW/°C above 75 °C
d. Derate 12 mW/°C above 75 °C

SCHEMATIC DIAGRAM (typical channel)

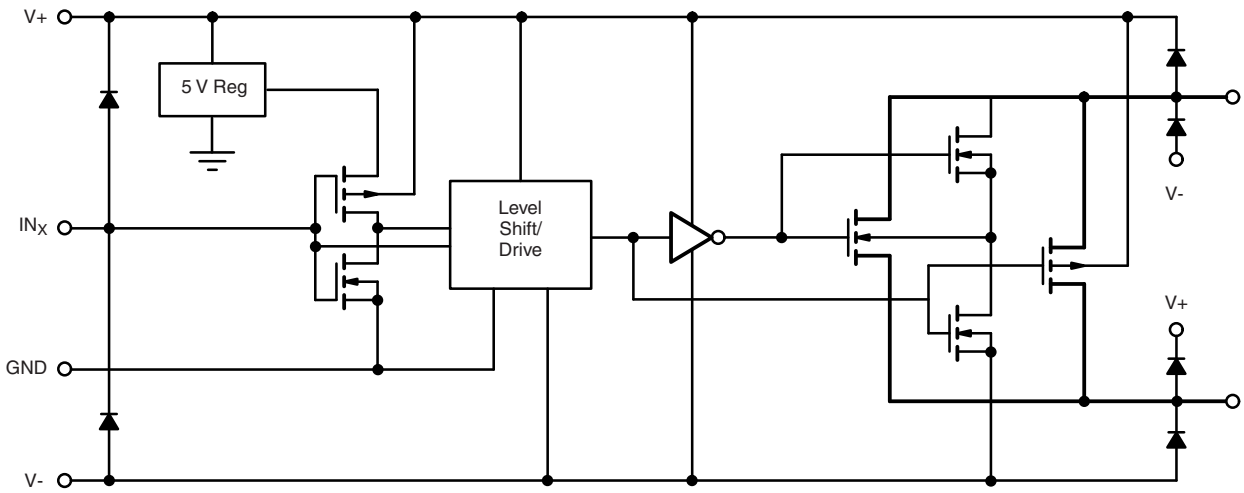

Fig. 1

For technical questions, contact: analogswitchtechsupport@vishay.com
THIS DOCUMENT IS SUBJECT TO CHANGE WITHOUT NOTICE. THE PRODUCTS DESCRIBED HEREIN AND THIS DOCUMENT ARE SUBJECT TO SPECIFIC DISCLAIMERS, SET FORTH AT www.vishay.com/doc?91000

SPECIFICATIONS [a] (dual supplies)									
PARAMETER	SYMBOL	TEST CONDITIONS UNLESS OTHERWISE SPECIFIED V+ = 15 V, V- = -15 V V_{IN} = 2.4 V, 0.8 V [f]	TEMP. [b]	TYP. [c]	A SUFFIX -55 °C TO +125 °C		D SUFFIX - 40 °C TO +85 °C		UNIT
					MIN. [d]	MAX. [d]	MIN. [d]	MAX. [d]	
Analog Switch									
Analog signal range [e]	V_{ANALOG}		Full	-	-15	15	-15	15	V
Drain-source on-resistance	$R_{DS(on)}$	I_S = -10 mA, V_D = ± 8.5 V, V+ = 13.5 V, V- = -13.5 V	Room	50	-	85	-	85	Ω
			Full	-	-	100	-	100	
On-resistance match between channels [e]	$\Delta R_{DS(on)}$	I_S = -10 mA, V_D = ± 10 V, V+ = 15 V, V- = -15 V	Room	-	-	4	-	4	
			Full	-	-	5	-	5	
Switch off leakage current	$I_{S(off)}$	V+ = 16.5, V- = -16.5 V, V_D = ± 15.5 V, V_S = ± 15.5 V	Room	± 0.01	-0.5	0.5	-0.5	0.5	nA
			Full	-	-20	20	-5	5	
	$I_{D(off)}$		Room	± 0.01	-0.5	0.5	-0.5	0.5	
			Full	-	-20	20	-5	5	
Channel on leakage current	$I_{D(on)}$	V+ = 16.5 V, V- = -16.5 V, V_S = V_D = ± 15.5 V	Room	± 0.08	-0.5	0.5	-0.5	0.5	
			Full	-	-40	40	-10	10	
Digital Control									
Input current V_{IN} low	I_{IL}	V_{IN} under test = 0.8 V, all other = 2.4 V	Full	-0.01	-500	500	-500	500	nA
Input current V_{IN} high	I_{IH}	V_{IN} under test = 2.4 V, all other = 0.8 V	Full	0.01	-500	500	-500	500	
Dynamic Characteristics									
Turn-on time	t_{on}	R_L = 1 kW, C_L = 35 pF, V_S = ± 10 V, see Fig. 2	Room	150	-	250	-	250	ns
Turn-off time DG441	t_{off}		Room	90	-	120	-	120	
Turn-off time DG442			Room	110	-	210	-	210	
Charge injection [e]	Q	C_L = 1 nF, V_S = 0 V, V_{gen} = 0 V, R_{gen} = 0 Ω	Room	-1	-	-	-	-	pC
Off Isolation [e]	OIRR	R_L = 50 Ω, C_L = 5 pF, f = 1 MHz	Room	60	-	-	-	-	dB
Crosstalk (channel-to-channel)	X_{TALK}		Room	100	-	-	-	-	
Source off capacitance [e]	$C_{S(off)}$	f = 1 MHz	Room	4	-	-	-	-	pF
Drain off capacitance [e]	$C_{D(off)}$		Room	4	-	-	-	-	
Channel on capacitance [e]	$C_{D(on)}$	V_{ANALOG} = 0 V	Room	16	-	-	-	-	
Power Supplies									
Positive supply current	I+	V+ = 16.5 V, V- = -16.5 V, V_{IN} = 0 V or 5 V	Full	15	-	100	-	100	µA
Negative supply current	I-		Room	-0.0001	-1	-	-1	-	
			Full	-	-5	-	5	-	
Ground current	I_{GND}		Full	-15	-100	-	-100	-	

For technical questions, contact: analogswitchtechsupport@vishay.com
THIS DOCUMENT IS SUBJECT TO CHANGE WITHOUT NOTICE. THE PRODUCTS DESCRIBED HEREIN AND THIS DOCUMENT ARE SUBJECT TO SPECIFIC DISCLAIMERS, SET FORTH AT www.vishay.com/doc?91000

SPECIFICATIONS [a] (single supply)									
PARAMETER	SYMBOL	TEST CONDITIONS UNLESS OTHERWISE SPECIFIED V+ = 12 V, V- = 0 V, V_{IN} = 2.4 V, 0.8 V [f]	TEMP. [b]	TYP. [c]	A SUFFIX -55 °C TO +125 °C		D SUFFIX - 40 °C TO +85 °C		UNIT
					MIN. [d]	MAX. [d]	MIN. [d]	MAX. [d]	
Analog Switch									
Analog signal range [e]	V_{ANALOG}		Full	-	0	12	0	12	V
Drain-source on-resistance	$R_{DS(on)}$	I_S = -10 mA, V_D = 3 V, 8 V, V+ = 10.8 V	Room	100	-	160	-	160	Ω
			Full	-	-	200	-	200	
Dynamic Characteristics									
Turn-on time	t_{on}	R_L = 1 kΩ, C_L = 35 pF V_S = 8 V, See Fig. 2	Room	300	-	450	-	450	ns
Turn-off time	t_{off}		Room	60	-	200	-	200	
Charge injection	Q	C_L = 1nF, V_{gen} = 6 V, R_{gen} = 0 Ω	Room	2	-	-	-	-	pC
Power Supplies									
Positive supply current	I+	V+ = 13.2 V, V- = 0 V, V_{IN} = 0 or 5 V	Full	15	-	100	-	100	µA
Negative supply current	I-		Room	-0.0001	-1	-	-1	-	
			Full	-	-100	-	-100	-	
Ground current	I_{GND}		Full	-15	-100	-	-100	-	

Notes

a. Refer to PROCESS OPTION FLOWCHARt
b. Room = 25 °C, full = as determined by the operating temperature suffix
c. Typical values are for DESIGN AID ONLY, not guaranteed nor subject to production testing
d. The algebraic convention whereby the most negative value is a minimum and the most positive a maximum, is used in this datasheet
e. Guaranteed by design, not subject to production test
f. V_{IN} = input voltage to perform proper function

Stresses beyond those listed under "Absolute Maximum Ratings" may cause permanent damage to the device. These are stress ratings only, and functional operation of the device at these or any other conditions beyond those indicated in the operational sections of the specifications is not implied. Exposure to absolute maximum rating conditions for extended periods may affect device reliability.

For technical questions, contact: analogswitchtechsupport@vishay.com
THIS DOCUMENT IS SUBJECT TO CHANGE WITHOUT NOTICE. THE PRODUCTS DESCRIBED HEREIN AND THIS DOCUMENT ARE SUBJECT TO SPECIFIC DISCLAIMERS, SET FORTH AT www.vishay.com/doc?91000

TYPICAL CHARACTERISTICS (25 °C, unless otherwise noted)

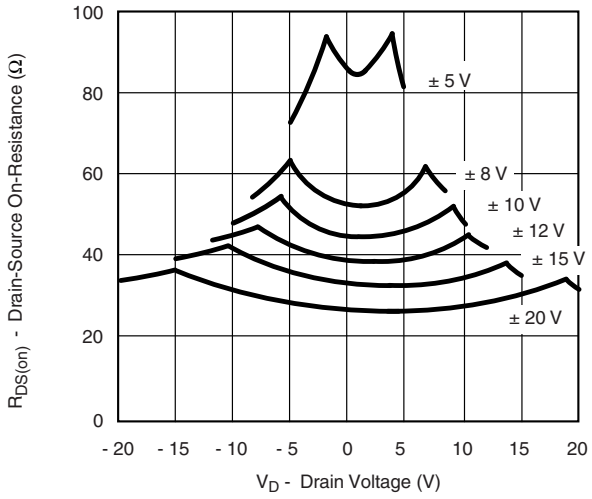

$R_{DS(on)}$ vs. V_D and Power Supply Voltage

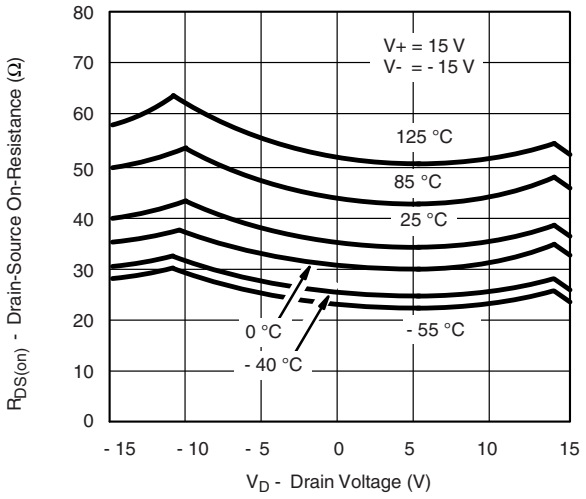

$R_{DS(on)}$ vs. V_D and Temperature

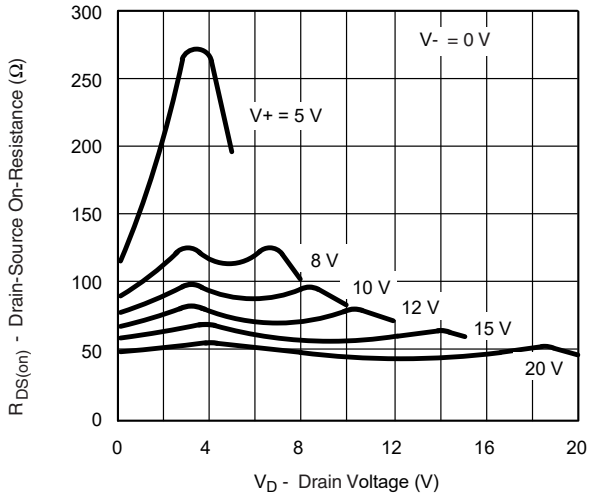

$R_{DS(on)}$ vs. V_D and Unipolar Power Supply Voltage

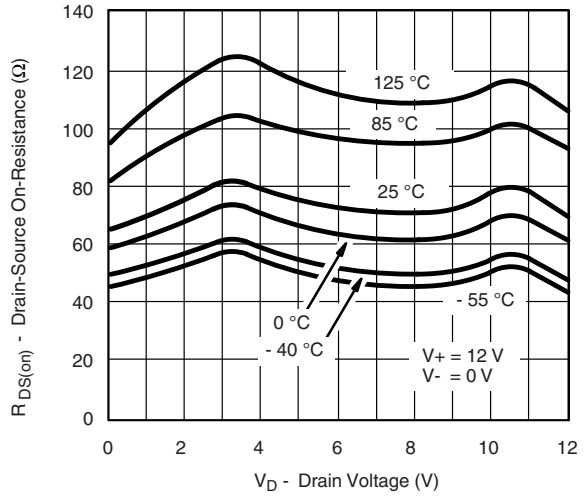

$R_{DS(on)}$ vs. V_D and Temperature (Single 12-V Supply)

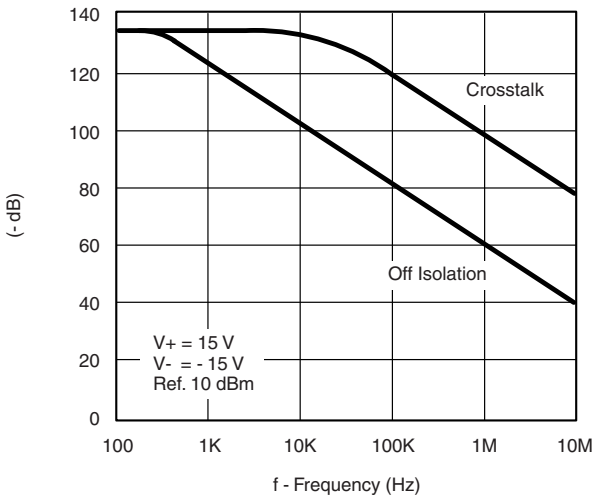

Crosstalk and Off Isolation vs. Frequency

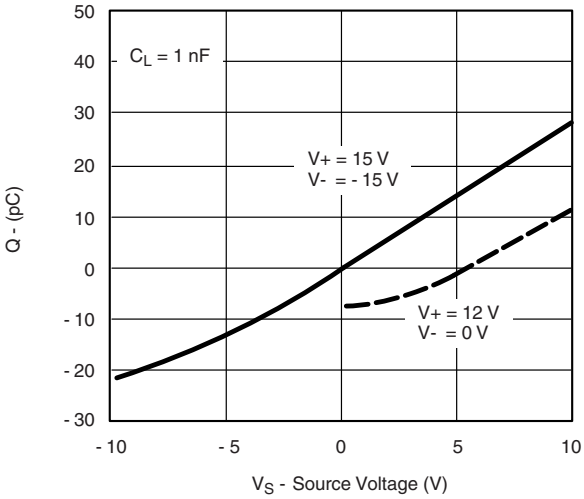

Charge Injection vs. Source Voltage

For technical questions, contact: analogswitchtechsupport@vishay.com
THIS DOCUMENT IS SUBJECT TO CHANGE WITHOUT NOTICE. THE PRODUCTS DESCRIBED HEREIN AND THIS DOCUMENT ARE SUBJECT TO SPECIFIC DISCLAIMERS, SET FORTH AT www.vishay.com/doc?91000

TYPICAL CHARACTERISTICS (25 °C, unless otherwise noted)

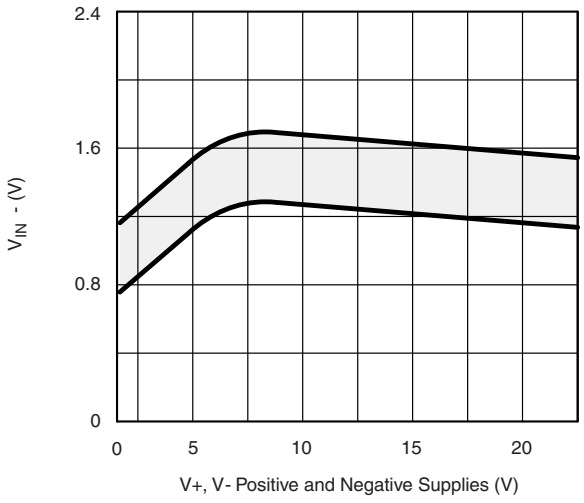

Switching Threshold vs. Supply Voltage

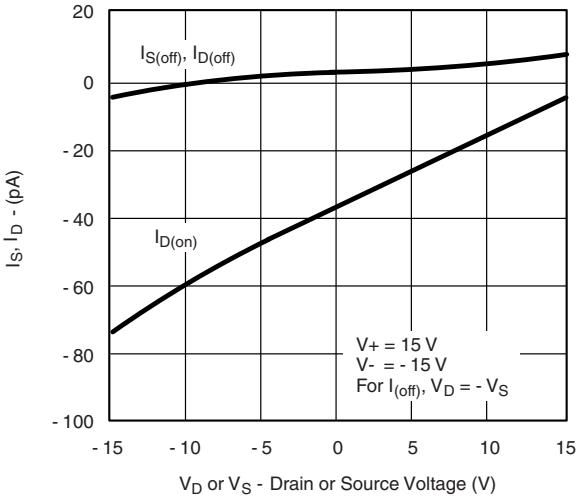

Source/Drain Leakage Currents

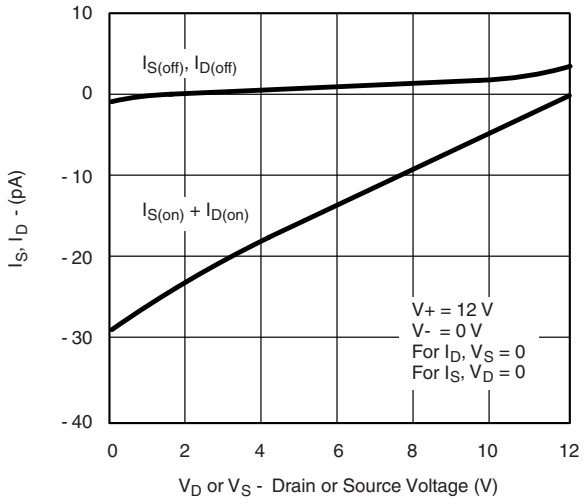

Source/Drain Leakage Currents (Single 12 V Supply)

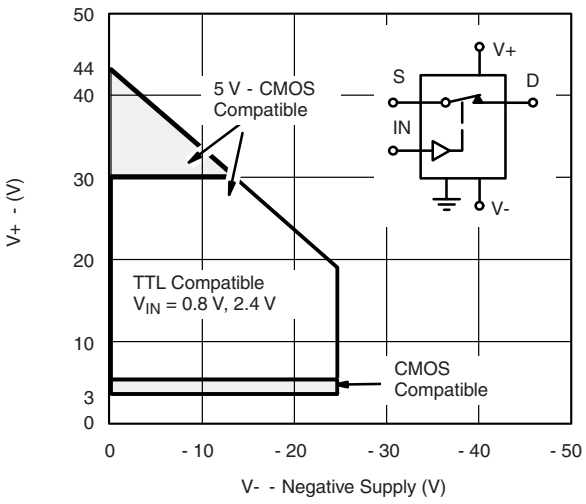

Operating Voltage

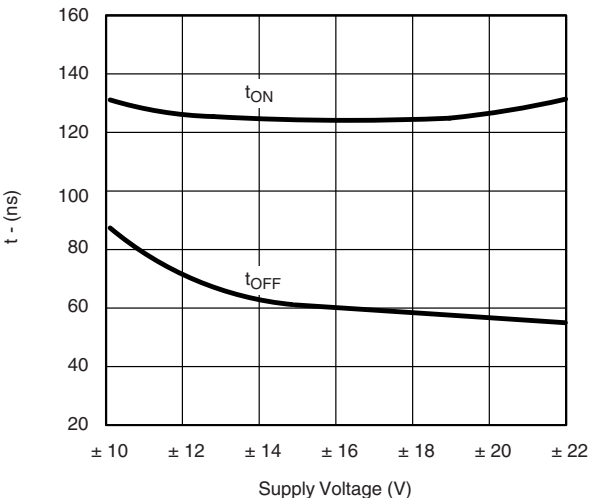

Switching Time vs. Power Supply Voltage

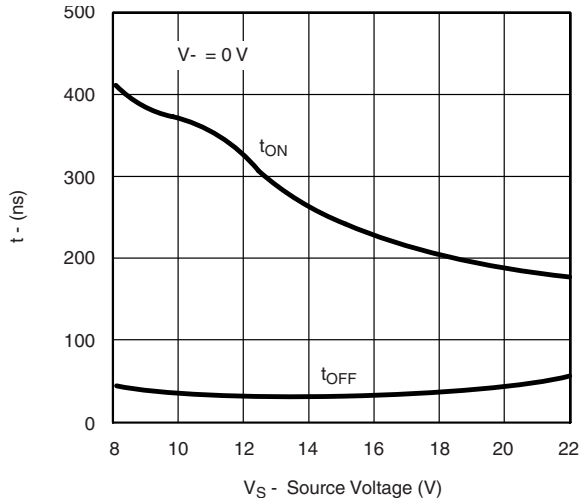

Switching Time vs. Power Supply Voltage

For technical questions, contact: analogswitchtechsupport@vishay.com
THIS DOCUMENT IS SUBJECT TO CHANGE WITHOUT NOTICE. THE PRODUCTS DESCRIBED HEREIN AND THIS DOCUMENT ARE SUBJECT TO SPECIFIC DISCLAIMERS, SET FORTH AT www.vishay.com/doc?91000

TEST CIRCUITS

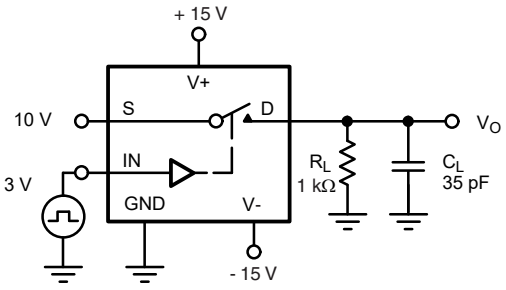

C_L (includes fixture and stray capacitance)

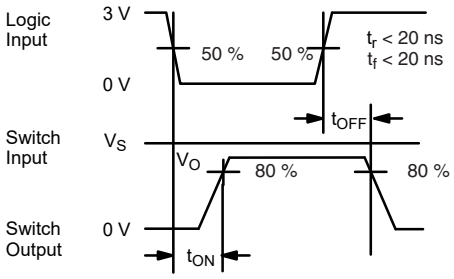

Note: Logic input waveform is inverted for DG442.

Fig. 2 - Switching Time

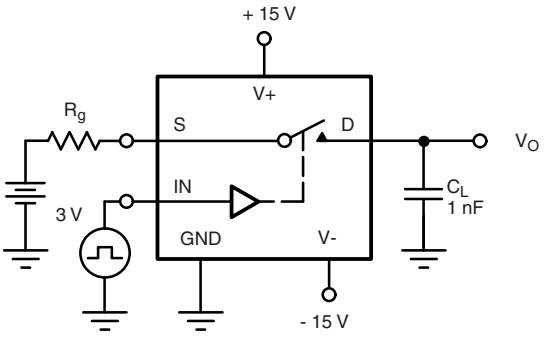

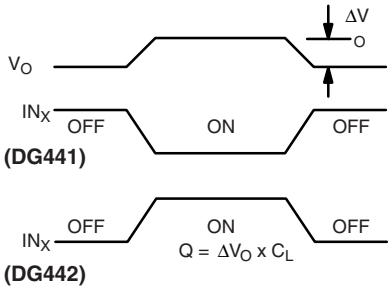

Fig. 3 - Charge Injection

C = 1 mF tantalum in parallel with 0.01 mF ceramic

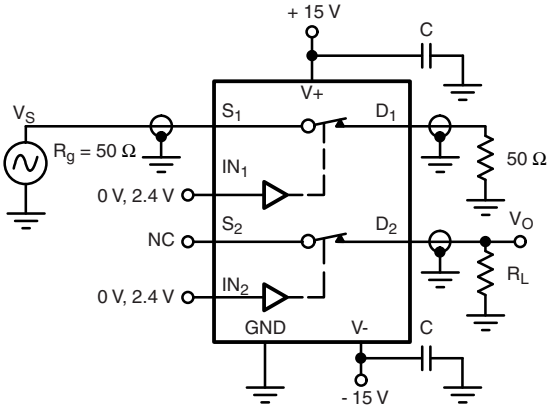

X_{TALK} Isolation = 20 log $\left|\frac{V_S}{V_O}\right|$
C = RF bypass

Fig. 4 - Crosstalk

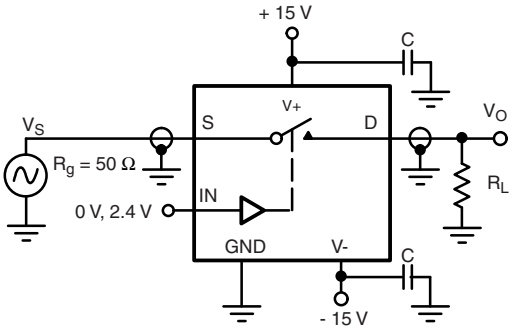

Off Isolation = 20 log $\left|\frac{V_S}{V_O}\right|$

Fig. 5 - Off Isolation

For technical questions, contact: analogswitchtechsupport@vishay.com
THIS DOCUMENT IS SUBJECT TO CHANGE WITHOUT NOTICE. THE PRODUCTS DESCRIBED HEREIN AND THIS DOCUMENT ARE SUBJECT TO SPECIFIC DISCLAIMERS, SET FORTH AT www.vishay.com/doc?91000

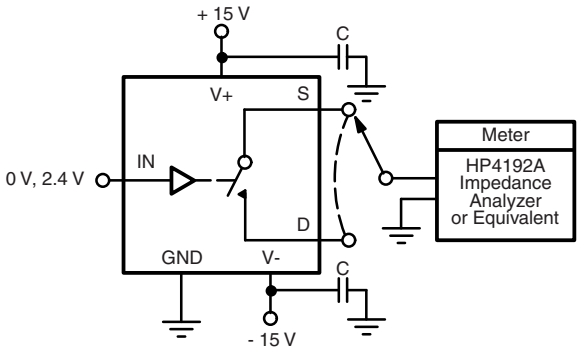

Fig. 6 - Source/Drain Capacitances

APPLICATIONS

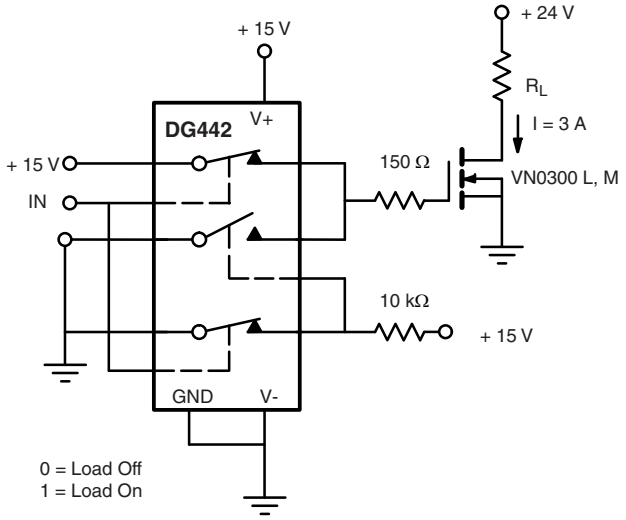

Fig. 7 - Power MOSFET Driver

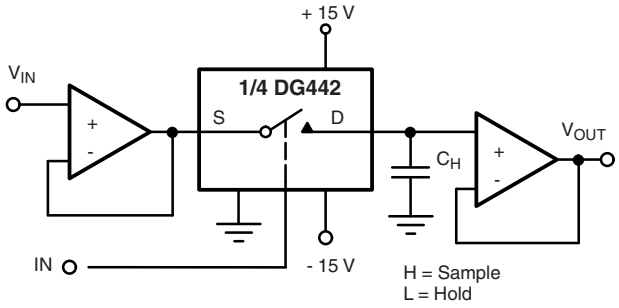

Fig. 8 - Open Loop Sample-and-Hold

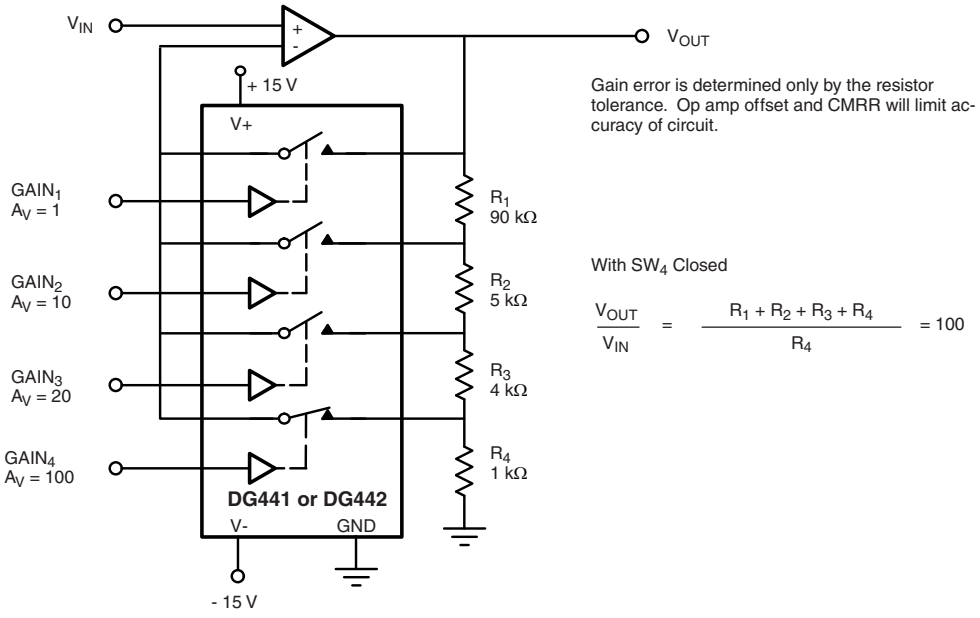

Fig. 9 - Precision-Weighted Resistor Programmable-Gain Amplifier

For technical questions, contact: analogswitchtechsupport@vishay.com
THIS DOCUMENT IS SUBJECT TO CHANGE WITHOUT NOTICE. THE PRODUCTS DESCRIBED HEREIN AND THIS DOCUMENT ARE SUBJECT TO SPECIFIC DISCLAIMERS, SET FORTH AT www.vishay.com/doc?91000

PRODUCT SUMMARY				
Part number	DG441	DG441	DG442	DG442
Status code	2	2	2	2
Configuration	SPST x 4, NC	SPST x 4, NC	SPST x 4, NO	SPST x 4, NO
Single supply min. (V)	5	5	5	5
Single supply max. (V)	36	36	36	36
Dual supply min. (V)	5	5	5	5
Dual supply max. (V)	22	22	22	22
On-resistance (Ω)	50	50	50	50
Charge injection (pC)	1	1	1	1
Source on capacitance (pF)	16	16	16	16
Source off capacitance (pF)	4	4	4	4
Leakage switch on typ. (nA)	0.08	0.08	0.08	0.08
Leakage switch off max. (nA)	0.5	0.5	0.5	0.5
-3 dB bandwidth (MHz)	-	-	-	-
Package	SO-16 (narrow) AS	Plastic DIP-16	SO-16 (narrow) AS	Plastic DIP-16
Functional circuit / applications	Multi purpose, instrumentation, medical and healthcare	Multi purpose, instrumentation, medical and healthcare	Multi purpose, instrumentation, medical and healthcare	Multi purpose, instrumentation, medical and healthcare
Interface	Parallel	Parallel	Parallel	Parallel
Single supply operation	Yes	Yes	Yes	Yes
Dual supply operation	Yes	Yes	Yes	Yes
Turn on time max. (ns)	250	250	250	250
Crosstalk and off isolation	-60	-60	-60	-60

Vishay Siliconix maintains worldwide manufacturing capability. Products may be manufactured at one of several qualified locations. Reliability data for Silicon Technology and Package Reliability represent a composite of all qualified locations. For related documents such as package/tape drawings, part marking, and reliability data, see www.vishay.com/ppg?70053.

For technical questions, contact: analogswitchtechsupport@vishay.com
THIS DOCUMENT IS SUBJECT TO CHANGE WITHOUT NOTICE. THE PRODUCTS DESCRIBED HEREIN AND THIS DOCUMENT ARE SUBJECT TO SPECIFIC DISCLAIMERS, SET FORTH AT www.vishay.com/doc?91000

SOIC (NARROW): 16-LEAD

JEDEC Part Number: MS-012

Dim	MILLIMETERS		INCHES	
	Min	Max	Min	Max
A	1.35	1.75	0.053	0.069
A_1	0.10	0.20	0.004	0.008
B	0.38	0.51	0.015	0.020
C	0.18	0.23	0.007	0.009
D	9.80	10.00	0.385	0.393
E	3.80	4.00	0.149	0.157
e	1.27 BSC		0.050 BSC	
H	5.80	6.20	0.228	0.244
L	0.50	0.93	0.020	0.037
⊘	0°	8°	0°	8°

ECN: S-03946—Rev. F, 09-Jul-01
DWG: 5300

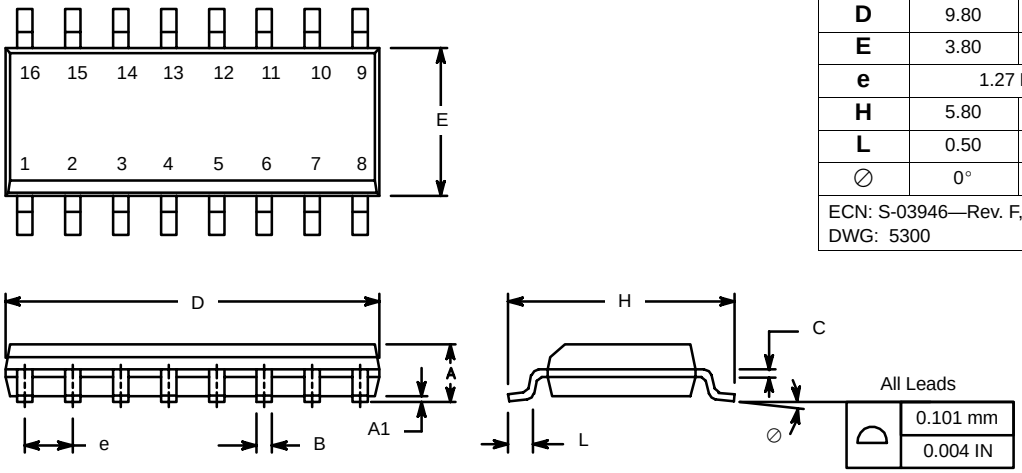

PDIP: 16-LEAD

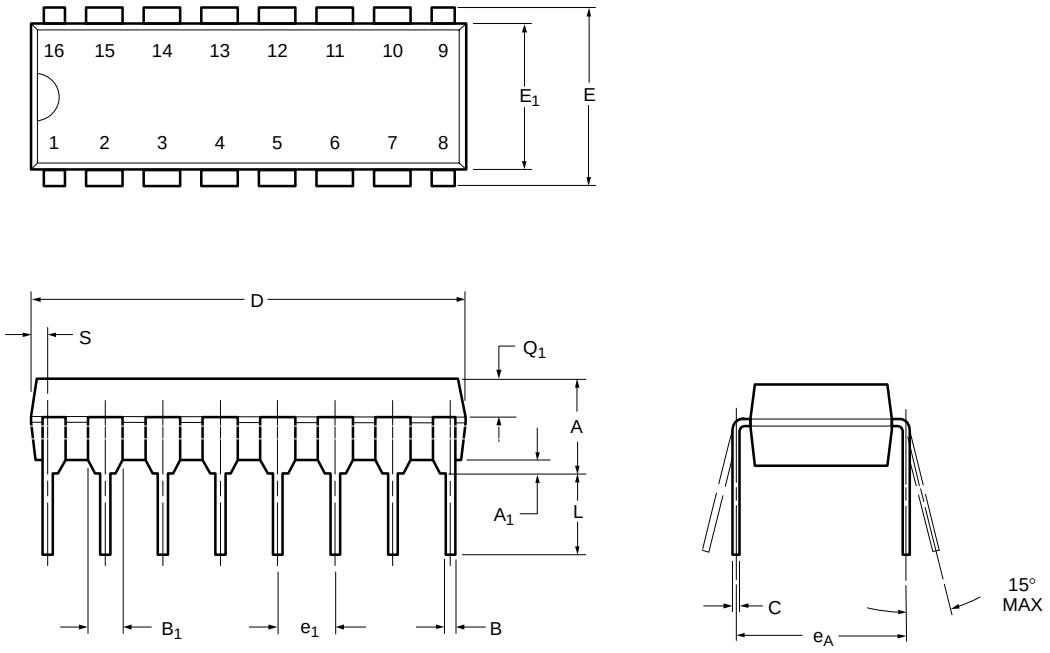

Dim	MILLIMETERS		INCHES	
	Min	Max	Min	Max
A	3.81	5.08	0.150	0.200
A_1	0.38	1.27	0.015	0.050
B	0.38	0.51	0.015	0.020
B_1	0.89	1.65	0.035	0.065
C	0.20	0.30	0.008	0.012
D	18.93	21.33	0.745	0.840
E	7.62	8.26	0.300	0.325
E_1	5.59	7.11	0.220	0.280
e_1	2.29	2.79	0.090	0.110
e_A	7.37	7.87	0.290	0.310
L	2.79	3.81	0.110	0.150
Q_1	1.27	2.03	0.050	0.080
S	0.38	1.52	.015	0.060
ECN: S-03946—Rev. D, 09-Jul-01 DWG: 5482				

RECOMMENDED MINIMUM PADS FOR SO-16

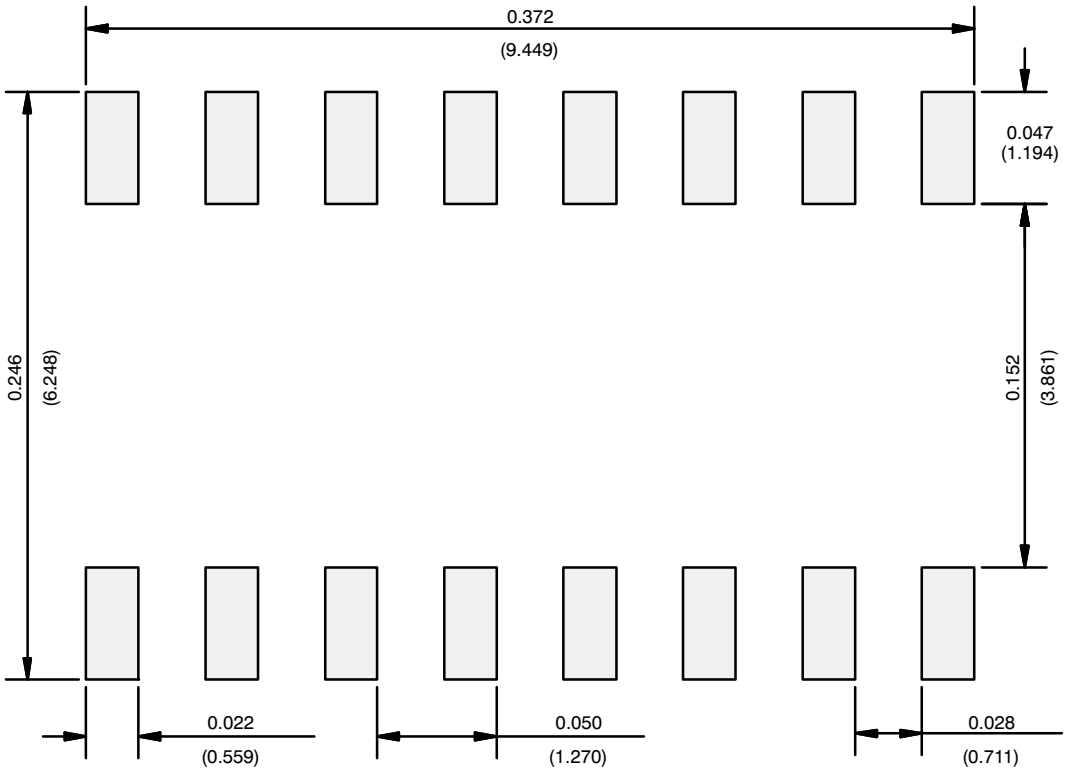

Recommended Minimum Pads
Dimensions in Inches/(mm)

Return to Index

Disclaimer

ALL PRODUCT, PRODUCT SPECIFICATIONS AND DATA ARE SUBJECT TO CHANGE WITHOUT NOTICE TO IMPROVE RELIABILITY, FUNCTION OR DESIGN OR OTHERWISE.

Vishay Intertechnology, Inc., its affiliates, agents, and employees, and all persons acting on its or their behalf (collectively, “Vishay”), disclaim any and all liability for any errors, inaccuracies or incompleteness contained in any datasheet or in any other disclosure relating to any product.

Vishay makes no warranty, representation or guarantee regarding the suitability of the products for any particular purpose or the continuing production of any product. To the maximum extent permitted by applicable law, Vishay disclaims (i) any and all liability arising out of the application or use of any product, (ii) any and all liability, including without limitation special, consequential or incidental damages, and (iii) any and all implied warranties, including warranties of fitness for particular purpose, non-infringement and merchantability.

Statements regarding the suitability of products for certain types of applications are based on Vishay's knowledge of typical requirements that are often placed on Vishay products in generic applications. Such statements are not binding statements about the suitability of products for a particular application. It is the customer's responsibility to validate that a particular product with the properties described in the product specification is suitable for use in a particular application. Parameters provided in datasheets and / or specifications may vary in different applications and performance may vary over time. All operating parameters, including typical parameters, must be validated for each customer application by the customer's technical experts. Product specifications do not expand or otherwise modify Vishay's terms and conditions of purchase, including but not limited to the warranty expressed therein.

Hyperlinks included in this datasheet may direct users to third-party websites. These links are provided as a convenience and for informational purposes only. Inclusion of these hyperlinks does not constitute an endorsement or an approval by Vishay of any of the products, services or opinions of the corporation, organization or individual associated with the third-party website. Vishay disclaims any and all liability and bears no responsibility for the accuracy, legality or content of the third-party website or for that of subsequent links.

Vishay products are not designed for use in life-saving or life-sustaining applications or any application in which the failure of the Vishay product could result in personal injury or death unless specifically qualified in writing by Vishay. Customers using or selling Vishay products not expressly indicated for use in such applications do so at their own risk. Please contact authorized Vishay personnel to obtain written terms and conditions regarding products designed for such applications.

No license, express or implied, by estoppel or otherwise, to any intellectual property rights is granted by this document or by any conduct of Vishay. Product names and markings noted herein may be trademarks of their respective owners.

© 2024 VISHAY INTERTECHNOLOGY, INC. ALL RIGHTS RESERVED

THIS DOCUMENT IS SUBJECT TO CHANGE WITHOUT NOTICE. THE PRODUCTS DESCRIBED HEREIN AND THIS DOCUMENT ARE SUBJECT TO SPECIFIC DISCLAIMERS, SET FORTH AT www.vishay.com/doc?91000