Load Switch with Level-Shift

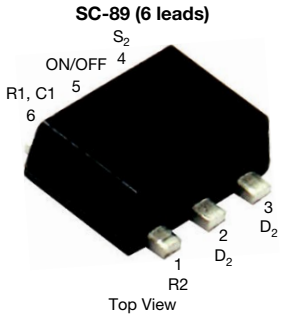

Marking code: P

FEATURES

- TrenchFET® power MOSFET
- 1.8 V to 8 V input
- 1.5 V to 8 V logic level control
- Smallest LITTLE FOOT® package: 1.6 mm x 1.6 mm
- 2000 V ESD protection on input switch, $V_{ON/OFF}$
- Adjustable slew-rate
- Material categorization: for definitions of compliance please see www.vishay.com/doc?99912

Pb-free
RoHS COMPLIANT
HALOGEN FREE

PRODUCT SUMMARY	
V_{DS2} (V)	8
$R_{DS(on)}$ max. (Ω) at V_{GS} = 4.5 V	0.625
$R_{DS(on)}$ max. (Ω) at V_{GS} = 2.5 V	0.890
$R_{DS(on)}$ max. (Ω) at V_{GS} = 1.8 V	1.250
I_D (A)	± 0.43
Configuration	Level-Shift

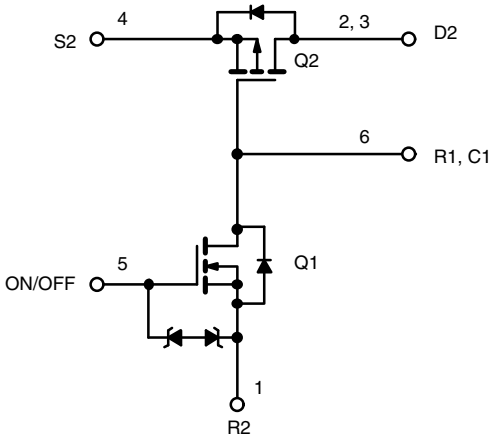

DESCRIPTION

The Si1040X includes a p- and n-channel MOSFET in a single SC-89-6 package. The low on-resistance p-channel TrenchFET is tailored for use as a load switch. The n-channel, with an external resistor, can be used as a level-shift to drive the p-channel load-switch. The n-channel MOSFET has internal ESD protection and can be driven by logic signals as low as 1.5 V. The Si1040X operates on supply lines from 1.8 V to 8 V, and can drive loads up to 0.43 A.

ORDERING INFORMATION	
Package	SC-89
Lead (Pb)-free and halogen-free	Si1040X-T1-GE3

TYPICAL APPLICATION CIRCUIT

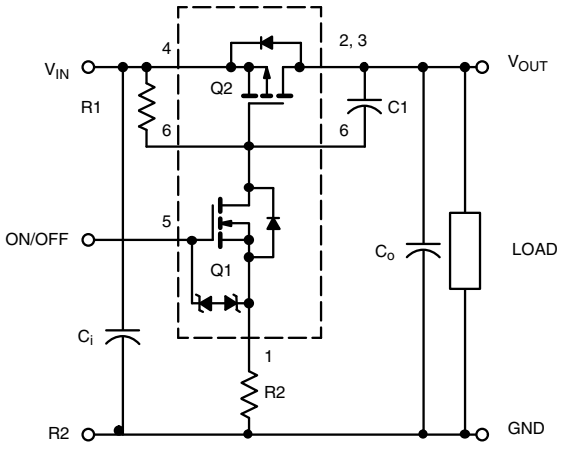

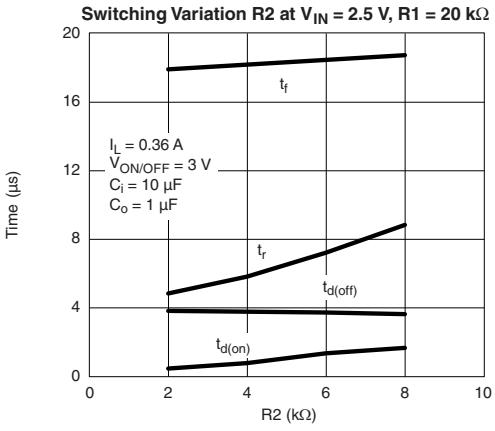

Note: For R2 switching variations with other V_{IN}/R1 combinations See Typical Characteristics

For technical questions, contact: pmostechsupport@vishay.com

THIS DOCUMENT IS SUBJECT TO CHANGE WITHOUT NOTICE. THE PRODUCTS DESCRIBED HEREIN AND THIS DOCUMENT ARE SUBJECT TO SPECIFIC DISCLAIMERS, SET FORTH AT www.vishay.com/doc?91000

COMPONENTS		
R1	Pull-up resistor	Typical 10 kΩ to 1 mΩ [a]
R2	Optional slew-rate control	Typical 0 to 100 kΩ [a]
C1	Optional slew-rate control	Typical 1000 pF

Note

a. Minimum R1 value should be at least 10 x R2 to ensure Q1 turn-on

The Si1040X is ideally suited for high side load switching in portable applications. The integrated n-channel level-shift device saves space by reducing external components. The slew rate is set externally so that rise-times can be tailored to different load types.

ABSOLUTE MAXIMUM RATINGS (T_A = 25 °C, unless otherwise noted)				
PARAMETER		SYMBOL	LIMIT	UNIT
Input voltage		V_{IN}	8	V
ON/OFF voltage		$V_{ON/OFF}$	8	
Load current	Continuous [a, b]	I_L	± 0.43	A
	Pulsed [b, c]		± 1	
Continuous intrinsic diode conduction [a]		I_S	-0.15	
Maximum power dissipation [a]		P_D	0.174	W
Operating junction and storage temperature range		T_J, T_{stg}	-55 to +150	°C
ESD rating, MIL-STD-883D human body model (100 pF, 1500 Ω)		ESD	2	kV

THERMAL RESISTANCE RATINGS				
PARAMETER	SYMBOL	TYPICAL	MAXIMUM	UNIT
Maximum junction-to-ambient (continuous current) [a]	R_{thJA}	600	720	°C/W
Maximum junction-to-foot (Q2)	R_{thJC}	450	540	

Note

a. Surface mounted on 1" x 1" FR4 board

SPECIFICATIONS (T_J = 25 °C, unless otherwise noted)						
PARAMETER	SYMBOL	TEST CONDITIONS	MIN.	TYP.	MAX.	UNIT
OFF Characteristics						
Reverse leakage current	I_{FL}	V_{IN} = 8 V, $V_{ON/OFF}$ = 0 V	-	-	1	µA
Diode forward voltage	V_{SD}	I_S = -0.15 A	-	0.85	1.2	V
ON Characteristics						
Input voltage range	V_{IN}		1.8	-	8	V
On-resistance (p-channel) at 1 A	$R_{DS(on)}$	$V_{ON/OFF}$ = 1.5 V, V_{IN} = 4.5 V, I_D = 0.43 A	-	0.500	0.625	Ω
		$V_{ON/OFF}$ = 1.5 V, V_{IN} = 2.5 V, I_D = 0.36 A	-	0.710	0.890	
		$V_{ON/OFF}$ = 1.5 V, V_{IN} = 1.8 V, I_D = 0.3 A	-	1	1.25	
On-state (p-channel) drain current	$I_{D(on)}$	$V_{IN-OUT} \leq$ 0.2 V, V_{IN} = 5 V, $V_{ON/OFF}$ = 1.5 V	1	-	-	A
		$V_{IN-OUT} \leq$ 0.3 V, V_{IN} = 3 V, $V_{ON/OFF}$ = 1.5 V	0.8	-	-	

Notes

a. Surface mounted on FR4 board

b. V_{IN} = 8 V, $V_{ON/OFF}$ = 8 V, T_A = 25 °C

c. Pulse test; pulse width ≤ 300 µs, duty cycle ≤ 2 %

Stresses beyond those listed under "Absolute Maximum Ratings" may cause permanent damage to the device. These are stress ratings only, and functional operation of the device at these or any other conditions beyond those indicated in the operational sections of the specifications is not implied. Exposure to absolute maximum rating conditions for extended periods may affect device reliability.

For technical questions, contact: pmostechsupport@vishay.com

THIS DOCUMENT IS SUBJECT TO CHANGE WITHOUT NOTICE. THE PRODUCTS DESCRIBED HEREIN AND THIS DOCUMENT ARE SUBJECT TO SPECIFIC DISCLAIMERS, SET FORTH AT www.vishay.com/doc?91000

TYPICAL CHARACTERISTICS (25 °C, unless otherwise noted)

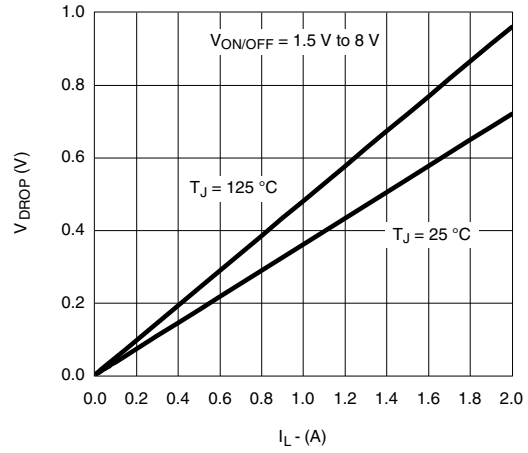

V_{DROP} vs. I_L at V_{IN} = 4.5 V

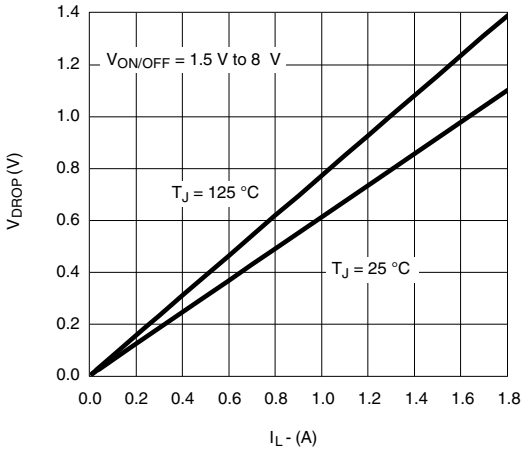

V_{DROP} vs. I_L at V_{IN} = 2.5 V

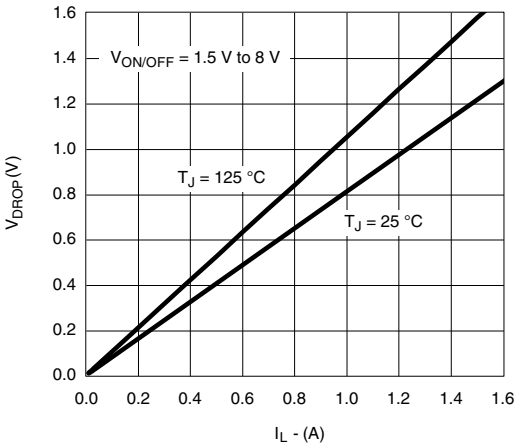

V_{DROP} vs. I_L at V_{IN} = 1.8 V

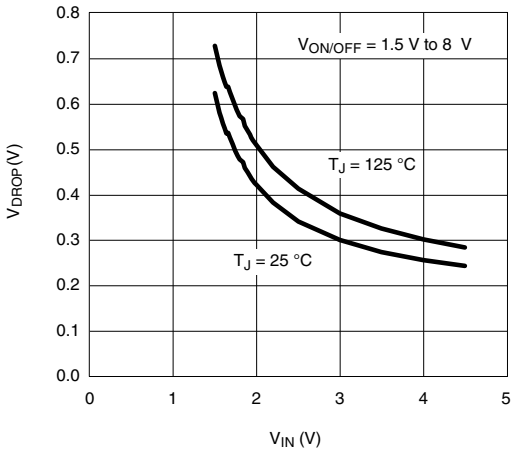

V_{DROP} vs. I_L at V_{IN} = 0.5 V

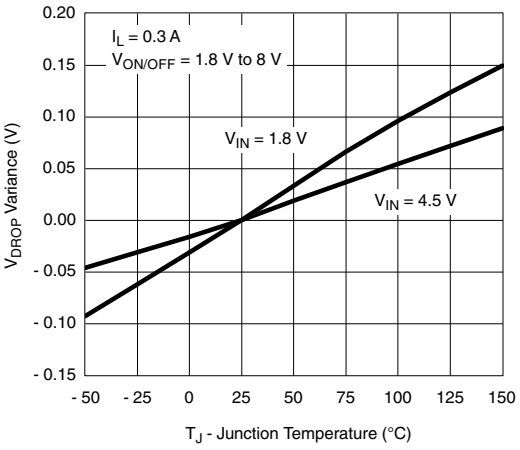

V_{DROP} Variance vs. Junction Temperature

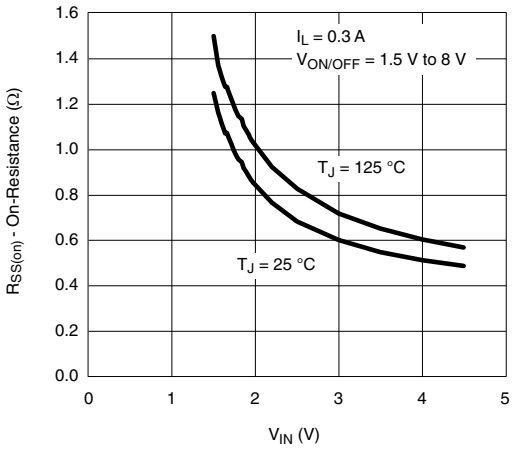

On-Resistance vs. Input Voltage

For technical questions, contact: pmostechsupport@vishay.com
THIS DOCUMENT IS SUBJECT TO CHANGE WITHOUT NOTICE. THE PRODUCTS DESCRIBED HEREIN AND THIS DOCUMENT ARE SUBJECT TO SPECIFIC DISCLAIMERS, SET FORTH AT www.vishay.com/doc?91000

TYPICAL CHARACTERISTICS (25 °C, unless otherwise noted)

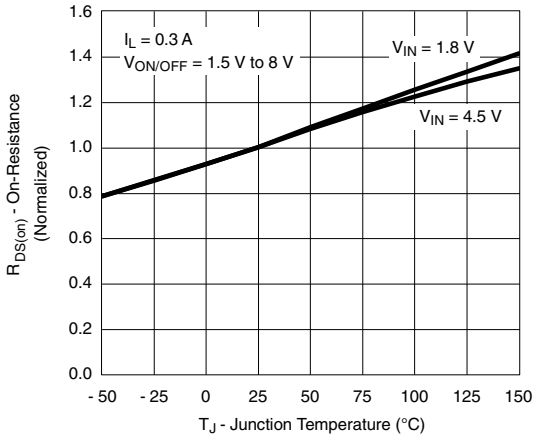

Normalized On-Resistance vs. Junction Temperature

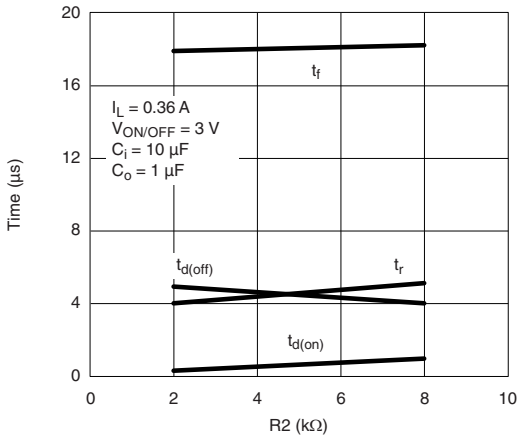

Switching Variation R2 at V_{IN} = 4.5 V, R1 = 20 kΩ

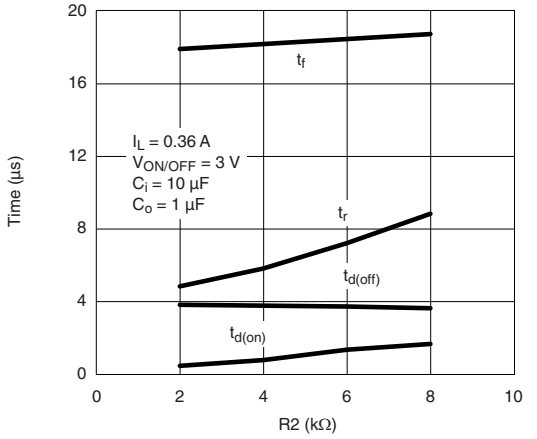

Switching Variation R2 at V_{IN} = 2.5 V, R1 = 20 kΩ

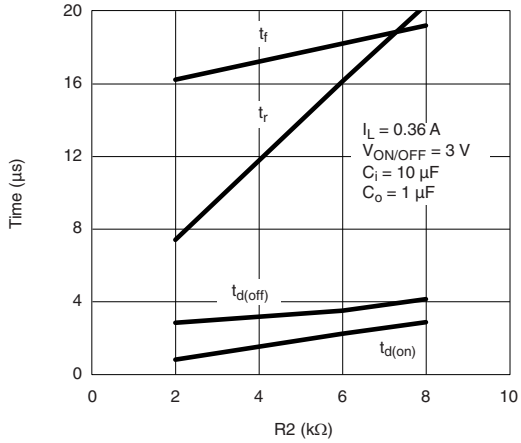

Switching Variation R2 at V_{IN} = 1.8 V, R1 = 20 kΩ

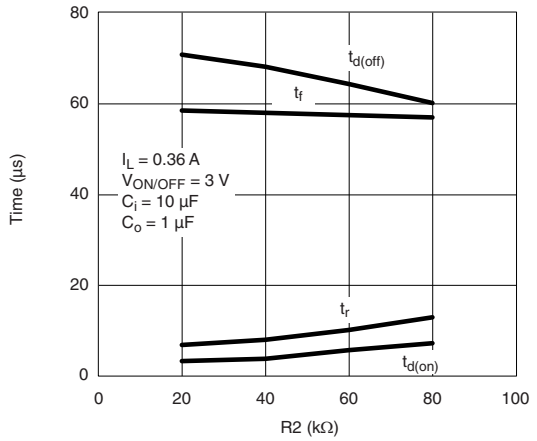

Switching Variation R2 at V_{IN} = 4.5 V, R1 = 300 kΩ

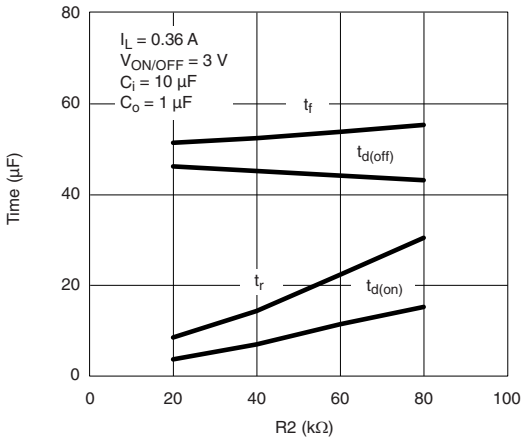

Switching Variation R2 at V_{IN} = 2.5 V, R1 = 300 kΩ

For technical questions, contact: pmostechsupport@vishay.com
THIS DOCUMENT IS SUBJECT TO CHANGE WITHOUT NOTICE. THE PRODUCTS DESCRIBED HEREIN AND THIS DOCUMENT ARE SUBJECT TO SPECIFIC DISCLAIMERS, SET FORTH AT www.vishay.com/doc?91000

TYPICAL CHARACTERISTICS (25 °C, unless otherwise noted)

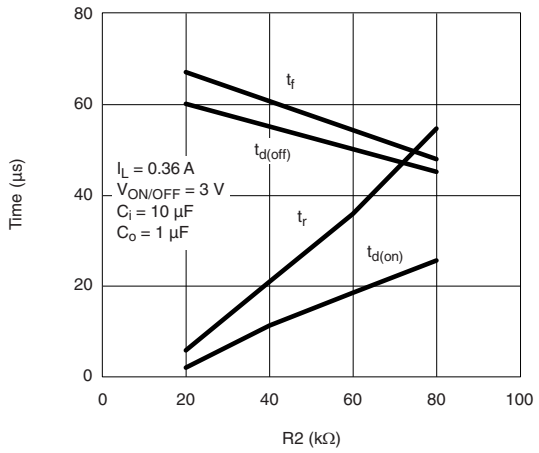

Switching Variation
R2 at V_{IN} = 1.8 V, R1 = 300 kΩ

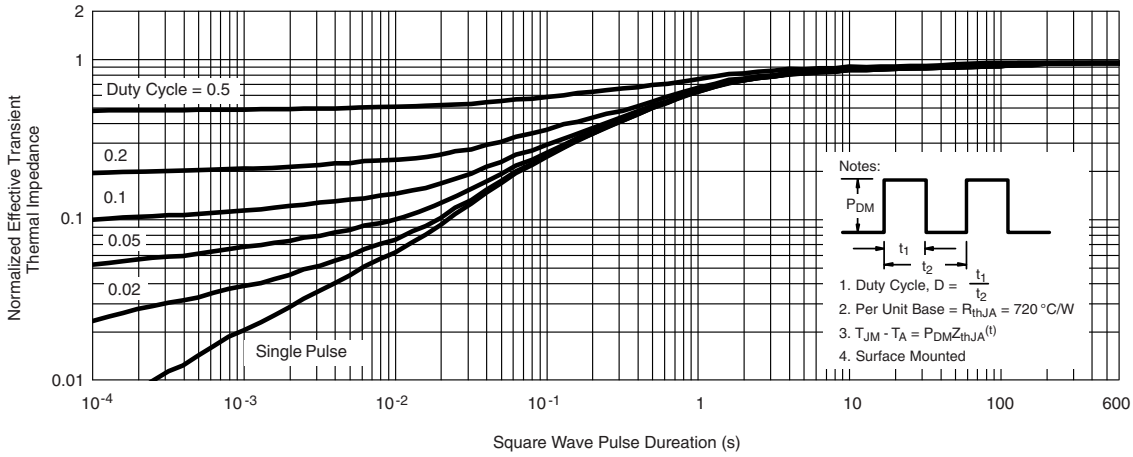

Normalized Thermal Transient Impedance, Junction-to-Ambient

Vishay Siliconix maintains worldwide manufacturing capability. Products may be manufactured at one of several qualified locations. Reliability data for Silicon Technology and Package Reliability represent a composite of all qualified locations. For related documents such as package / tape drawings, part marking, and reliability data, see www.vishay.com/ppg?71809.

For technical questions, contact: pmostechsupport@vishay.com
THIS DOCUMENT IS SUBJECT TO CHANGE WITHOUT NOTICE. THE PRODUCTS DESCRIBED HEREIN AND THIS DOCUMENT ARE SUBJECT TO SPECIFIC DISCLAIMERS, SET FORTH AT www.vishay.com/doc?91000

SC-89 6-Leads (SOT-563F)

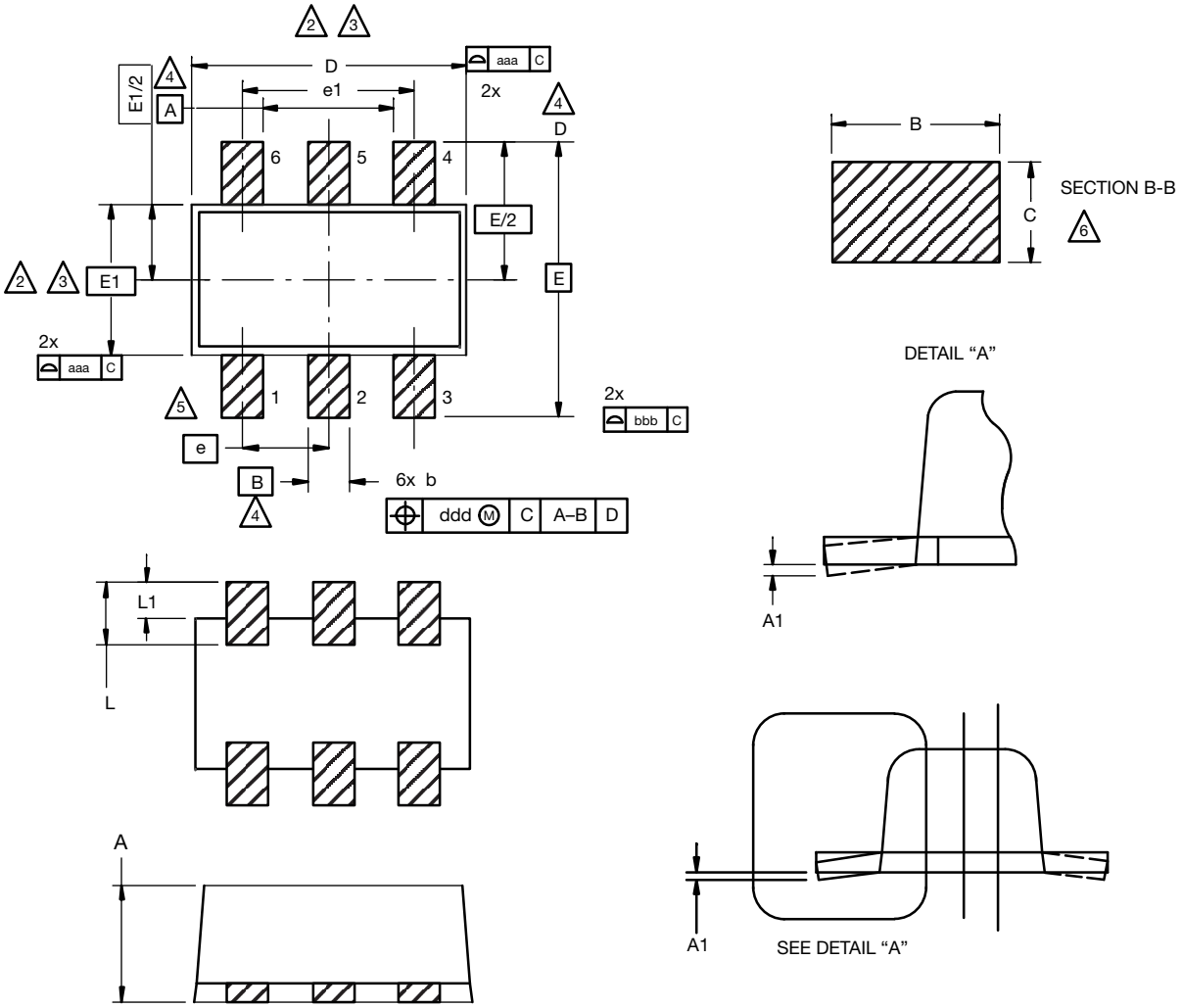

Notes

1. Dimensions in millimeters.

2. Dimension D does not include mold flash, protrusions or gate burrs. Mold flush, protrusions or gate burrs shall not exceed 0.15 mm per dimension E1 does not include interlead flash or protrusion, interlead flash or protrusion shall not exceed 0.15 mm per side.

3. Dimensions D and E1 are determined at the outmost extremes of the plastic body exclusive of mold flash, the bar burrs, gate burrs and interlead flash, but including any mismatch between the top and the bottom of the plastic body.

4. Datums A, B and D to be determined 0.10 mm from the lead tip.

5. Terminal numbers are shown for reference only.

6. These dimensions apply to the flat section of the lead between 0.08 mm and 0.15 mm from the lead tip.

DIM.	MILLIMETERS		
	MIN.	NOM.	MAX.
A	0.56	0.58	0.60
A1	0	0.02	0.10
b	0.15	0.22	0.30
c	0.10	0.14	0.18
D	1.50	1.60	1.70
E	1.50	1.60	1.70
E1	1.15	1.20	1.25
e	0.45	0.50	0.55
e1	0.95	1.00	1.05
L	0.25	0.35	0.50
L1	0.10	0.20	0.30
C14-0439-Rev. C, 11-Aug-14 DWG: 5880			

For technical questions, contact: analogswitchtechsupport@vishay.com

THIS DOCUMENT IS SUBJECT TO CHANGE WITHOUT NOTICE. THE PRODUCTS DESCRIBED HEREIN AND THIS DOCUMENT ARE SUBJECT TO SPECIFIC DISCLAIMERS, SET FORTH AT www.vishay.com/doc?91000

RECOMMENDED MINIMUM PADS FOR SC-89: 6-Lead

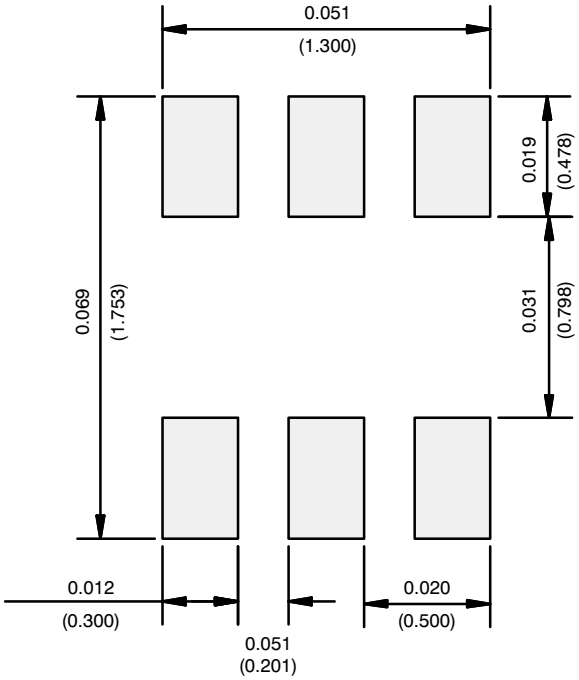

Recommended Minimum Pads
Dimensions in Inches/(mm)

Return to Index

APPLICATION NOTE

Disclaimer

ALL PRODUCT, PRODUCT SPECIFICATIONS AND DATA ARE SUBJECT TO CHANGE WITHOUT NOTICE TO IMPROVE RELIABILITY, FUNCTION OR DESIGN OR OTHERWISE.

Vishay Intertechnology, Inc., its affiliates, agents, and employees, and all persons acting on its or their behalf (collectively, “Vishay”), disclaim any and all liability for any errors, inaccuracies or incompleteness contained in any datasheet or in any other disclosure relating to any product.

Vishay makes no warranty, representation or guarantee regarding the suitability of the products for any particular purpose or the continuing production of any product. To the maximum extent permitted by applicable law, Vishay disclaims (i) any and all liability arising out of the application or use of any product, (ii) any and all liability, including without limitation special, consequential or incidental damages, and (iii) any and all implied warranties, including warranties of fitness for particular purpose, non-infringement and merchantability.

Statements regarding the suitability of products for certain types of applications are based on Vishay's knowledge of typical requirements that are often placed on Vishay products in generic applications. Such statements are not binding statements about the suitability of products for a particular application. It is the customer's responsibility to validate that a particular product with the properties described in the product specification is suitable for use in a particular application. Parameters provided in datasheets and / or specifications may vary in different applications and performance may vary over time. All operating parameters, including typical parameters, must be validated for each customer application by the customer's technical experts. Product specifications do not expand or otherwise modify Vishay's terms and conditions of purchase, including but not limited to the warranty expressed therein.

Hyperlinks included in this datasheet may direct users to third-party websites. These links are provided as a convenience and for informational purposes only. Inclusion of these hyperlinks does not constitute an endorsement or an approval by Vishay of any of the products, services or opinions of the corporation, organization or individual associated with the third-party website. Vishay disclaims any and all liability and bears no responsibility for the accuracy, legality or content of the third-party website or for that of subsequent links.

Vishay products are not designed for use in life-saving or life-sustaining applications or any application in which the failure of the Vishay product could result in personal injury or death unless specifically qualified in writing by Vishay. Customers using or selling Vishay products not expressly indicated for use in such applications do so at their own risk. Please contact authorized Vishay personnel to obtain written terms and conditions regarding products designed for such applications.

No license, express or implied, by estoppel or otherwise, to any intellectual property rights is granted by this document or by any conduct of Vishay. Product names and markings noted herein may be trademarks of their respective owners.

© 2024 VISHAY INTERTECHNOLOGY, INC. ALL RIGHTS RESERVED

THIS DOCUMENT IS SUBJECT TO CHANGE WITHOUT NOTICE. THE PRODUCTS DESCRIBED HEREIN AND THIS DOCUMENT ARE SUBJECT TO SPECIFIC DISCLAIMERS, SET FORTH AT www.vishay.com/doc?91000