1/2" (12.7 mm) Conductive Plastic and Cermet Potentiometer

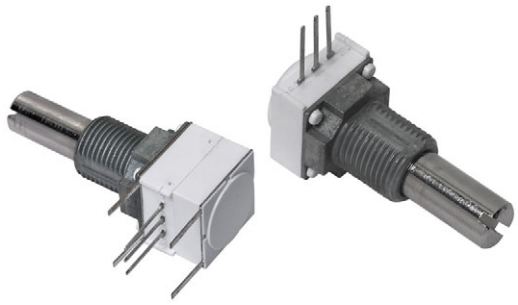

FEATURES

- Robust construction
- High rotational life (50 000 cycles)
- Up to three sections PC support plates
- Rotary switches and solder lugs terminals available
- Tests according to CECC 41000 or IEC 60393-1
- Material categorization: for definitions of compliance please see www.vishay.com/doc?99912

RoHS COMPLIANT

LINKS TO ADDITIONAL RESOURCES

3D Models

148 FEATURES

- Conductive plastic element
- Quiet electrical output

149 FEATURES

- Cermet element
- Low temperature coefficient (± 150 ppm/°C)

QUICK REFERENCE DATA	
Multiple module	Up to 3 modules
Switch module	Yes
Detent module	n/a
Special electrical laws	A: linear, L: logarithmic, F: reverse logarithmic
Sealing level	IP 64
Lifespan	50K cycles

DIMENSIONS in millimeters (inches) ± 0.5 mm (± 0.02")

Single, dual or triple

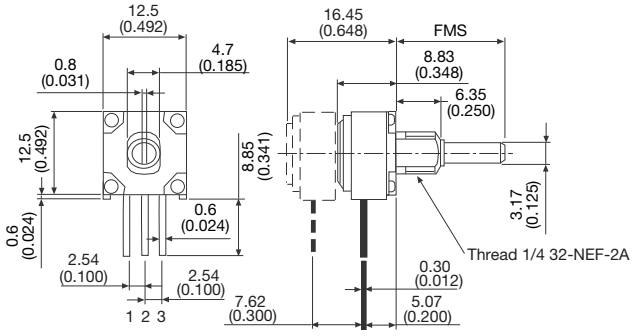

Solder lug terminals

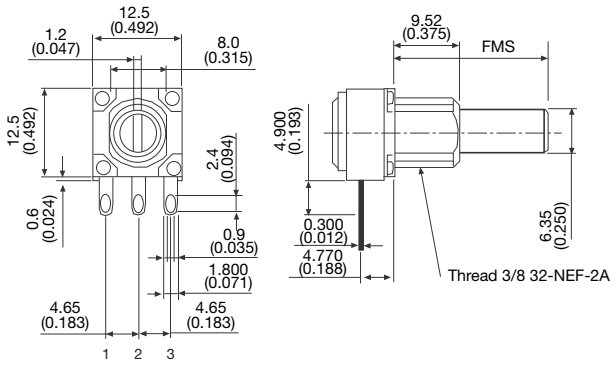

Front and rear support plates
E = flush with board surface

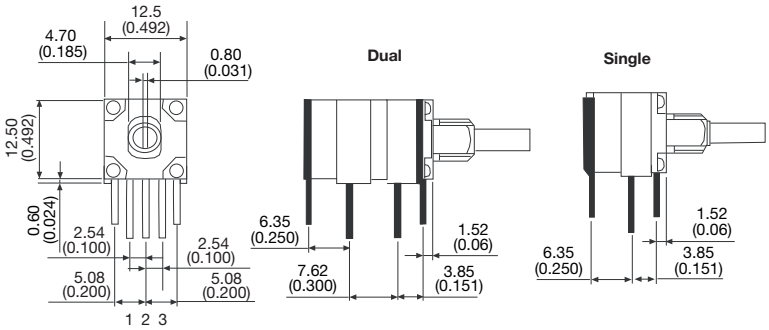

For technical questions, contact: sferpottrimmers@vishay.com

THIS DOCUMENT IS SUBJECT TO CHANGE WITHOUT NOTICE. THE PRODUCTS DESCRIBED HEREIN AND THIS DOCUMENT ARE SUBJECT TO SPECIFIC DISCLAIMERS, SET FORTH AT www.vishay.com/doc?91000

ELECTRICAL SPECIFICATIONS			
PARAMETER		**148**	**149**
Resistance range	linear	1 kΩ to 500 kΩ	100 Ω to 2 MΩ
	non-linear	500 Ω to 250 kΩ	250 Ω to 1 MΩ
Tolerance	linear	10 %	10 %
	non-linear	20 % on request 10 %	10 %
Linearity (typical)		± 5 % independent	
End resistance		4 Ω maximum each end	
Power rating		0.5 W at 70 °C 0 W at 120 °C	1 W at 70 °C 0 W at 150 °C
		Non-linear or PC mount, derate 50 %	
Circuit diagram		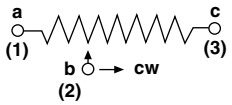	
Effective rotation		270° ± 10 ° without rotary switch 240° ± 10 ° with rotary switch	
Contact resistance variation (typical)		1.5 % of total resistance	3 % of total resistance
Maximum continuous working voltage		350 V_{AC} across end terminals, but within power rating	
Dielectric withstanding voltage		Sea level -750 V_{AC}	

MECHANICAL SPECIFICATIONS		
Mechanical travel		300° ± 5°
Operating torque (typical)		Single section 0.2 oz. to 3.0 oz. - in dual or triple section 0.3 oz.-inch to 4.5 oz.-inch
End stop torque	bushing A and B	2.1 lb-inch max.
	bushing F	6.8 lb-inch max.
Weight (approx.)	single	0.19 oz.
	dual	0.27 oz.
	triple	0.35 oz.
Terminals	electrical elements	e3: pure Sn
	switch elements	e4: gold plated

ENVIRONMENTAL SPECIFICATIONS		
	148	**149**
Operating temperature	-40 °C to +125 °C	-40 °C to +125 °C
Storage temperature	-55 °C to +125 °C	-55 °C to +125 °C
Temperature cycling (5 cycles)	-40 °C to +125 °C (4 % ΔR_T)	-40 °C to +125 °C (3 % ΔR_T)
Load life (1000 h rated load at 70 °C)	10 % ΔR_T	5 % ΔR_T
Mechanical endurance	50 000 cycles	
TCR (typical)	± 500 ppm/°C	± 150 ppm/°C
Sealing	IP64	

Note

- Nothing stated herein shall be construed as a guarantee of quality or durability

MARKING

Vishay logo, SAP code of ohmic value, tolerance in %, variation law, manufacturing date (four digits), “3” for the lead 3, product series (148, 149)

For technical questions, contact: sferpottrimmers@vishay.com

THIS DOCUMENT IS SUBJECT TO CHANGE WITHOUT NOTICE. THE PRODUCTS DESCRIBED HEREIN AND THIS DOCUMENT ARE SUBJECT TO SPECIFIC DISCLAIMERS, SET FORTH AT www.vishay.com/doc?91000

LOCATING PEGS (anti-rotation lug)

The locating peg is provided by a plate mounted on the bushing and positioned by the module sides. Four set positions are available, clock face orientation: 12, 3, 6, 9.

All 148, 149 bushings have a double flat. When panel mounting holes have been punched accordingly, an anti-rotation lug is not necessary.

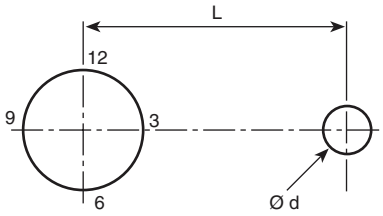

CODE	VERSION	BUSHING A, B	BUSHING F	EFFECTIVE HIGH PEG
A	Ø d mm	2	2	0.7
	L mm	6.2	6.2	-
B	Ø d mm	2	2	0.7
	L mm	7.75	7.75	-
C	Ø d mm	-	3.5	1.1
	L mm	-	13.5	-

Locating pegs are supplied in separate bags with nuts and washers

RSID OPTION: ROTARY SWITCH MODULES

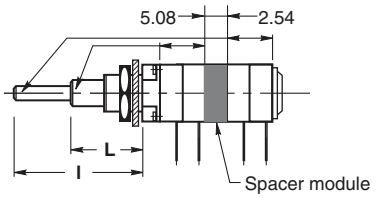

- Rotary switches
- Current up to 2 A
- SPDT: single pole, changeover switch in CCW position - 3 pins
- Sealing IP60

MODULES: RS ON/OFF SWITCH
RSI CHANGEOVER SWITCH

The position of each module is free.
RS and RSI rotary switches are housed in a standard 148, 149 module size 12.7 mm x 12.7 mm x 5.08 mm (0.5" x 0.5" x 0.2"). They have the same terminal styles as the assembled electrical modules.

An assembly can comprise 1 or more switch modules.

Switch actuation is described as seen from the shaft end.
D: means actuation in maximum CCW position

The switch actuation travel is 25° with a total mechanical travel of 300° ± 5° and electrical travel of electrical modules is 238° ± 10°.

RSID Single Pole CHANGEOVER

In full CCW position, the contact is made between 3 and 2 and open between 3 and 1. Switch actuation (CW direction) reverses these positions.

SWITCH SPECIFICATIONS		
Switching power maximum		62.5 VA ν 15 VA =
Switching current maximum		0.25 A 250 V ν 0.5 A 30 V =
Maximum current through element		2 A
Contact resistance		100 mΩ
Dielectric strength	Terminal to terminal	1000 V_{RMS}
	Terminal to bushing	2000 V_{RMS}
Maximum voltage operation		250 V ν 30 V =
Insulation resistance between contacts		10^6 MΩ
Life at $P_{max.}$		10 000 actuations
Minimal travel		25°
Operating temperature		-40 °C to +85 °C

ELECTRICAL DIAGRAM

RSID
CCW POSITION

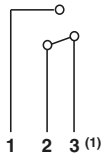

Note
(1) Common

For technical questions, contact: sferpottrimmers@vishay.com
THIS DOCUMENT IS SUBJECT TO CHANGE WITHOUT NOTICE. THE PRODUCTS DESCRIBED HEREIN AND THIS DOCUMENT ARE SUBJECT TO SPECIFIC DISCLAIMERS, SET FORTH AT www.vishay.com/doc?91000

ORDERING INFORMATION (part number)

1	4	8	1	0	F	0	G	J	S	X	1	0	1	0	3	K	A

MODEL	NUMBER OF MODULES	SWITCH	BUSHING	LOCATING PEG	SHAFT	SHAFT END	LEADS	RESISTANCE CODE / TOLERANCE / TAPER OR SPECIAL
148 = plastic conductive 149 = cermet element	1 2 3	1 = RSID 0 = without switch	See table "Bushing"	0 = without A B C	See table "Shaft"	S = slotted On request: R = round F = flatted	See table "Leads"	Resistance code: 101 = 100 Ω to 105 = 1 MΩ Tolerance code: M = 20 %; K = 10 % Taper: A (S); L (Z); F (R) or Special code given by Vishay

BUSHING

	Ø	L	OLD CODES
A	1/4"	1/4"	N
B	1/4"	3/8"	J
F	3/8"	3/8"	G

SHAFT

	Ø	FMS	OLD CODES
BB	1/8"	1/2"	32
BG	1/8"	5/8"	40
BH	1/8"	3/4"	48
BJ	1/8"	7/8"	56
GB	1/4"	1/2"	32
GG	1/4"	5/8"	40
GH	1/4"	3/4"	48
GJ	1/4"	7/8"	56
GL	1/4"	1"	64
GN	1/4"	1 1/4"	80

LEADS

	TYPE	PIN SPACING	SPACE BETWEEN MODULES	OLD CODES
X10	PCB pins	2.54 mm (0.100")	n/a	P
X13			7.62 mm (0.300")	
A10	PCB pins and support plates	2.54 mm (0.100")	n/a	E
A13			7.62 mm (0.300")	
Y00	Sold, lugs	4.65 mm (0.183")	n/a	S
Y03			7.62 mm (0.300")	

PART NUMBER DESCRIPTION (for information only)

148	1	0	F	0	GJ	S	X10	BO50	10K	10 %	A			e3
MODEL	MODULES	SWITCH	BUSHING	LOCATING PEG	SHAFT	SHAFT	LEADS	PACK.	VALUE	TOL.	TAPER	SPECIAL	SPECIAL	LEAD FINISH

ACCESSORIES

Additional Accessories (to order separately)	www.vishay.com/doc?51051

RELATED DOCUMENTS

APPLICATION NOTES	
Potentiometers and Trimmers	www.vishay.com/doc?51001
Guidelines for Vishay Sfernice Resistive and Inductive Components	www.vishay.com/doc?52029

For technical questions, contact: sferpottrimmers@vishay.com

THIS DOCUMENT IS SUBJECT TO CHANGE WITHOUT NOTICE. THE PRODUCTS DESCRIBED HEREIN AND THIS DOCUMENT ARE SUBJECT TO SPECIFIC DISCLAIMERS, SET FORTH AT www.vishay.com/doc?91000

Disclaimer

ALL PRODUCT, PRODUCT SPECIFICATIONS AND DATA ARE SUBJECT TO CHANGE WITHOUT NOTICE TO IMPROVE RELIABILITY, FUNCTION OR DESIGN OR OTHERWISE.

Vishay Intertechnology, Inc., its affiliates, agents, and employees, and all persons acting on its or their behalf (collectively, “Vishay”), disclaim any and all liability for any errors, inaccuracies or incompleteness contained in any datasheet or in any other disclosure relating to any product.

Vishay makes no warranty, representation or guarantee regarding the suitability of the products for any particular purpose or the continuing production of any product. To the maximum extent permitted by applicable law, Vishay disclaims (i) any and all liability arising out of the application or use of any product, (ii) any and all liability, including without limitation special, consequential or incidental damages, and (iii) any and all implied warranties, including warranties of fitness for particular purpose, non-infringement and merchantability.

Statements regarding the suitability of products for certain types of applications are based on Vishay's knowledge of typical requirements that are often placed on Vishay products in generic applications. Such statements are not binding statements about the suitability of products for a particular application. It is the customer's responsibility to validate that a particular product with the properties described in the product specification is suitable for use in a particular application. Parameters provided in datasheets and / or specifications may vary in different applications and performance may vary over time. All operating parameters, including typical parameters, must be validated for each customer application by the customer's technical experts. Product specifications do not expand or otherwise modify Vishay's terms and conditions of purchase, including but not limited to the warranty expressed therein.

Hyperlinks included in this datasheet may direct users to third-party websites. These links are provided as a convenience and for informational purposes only. Inclusion of these hyperlinks does not constitute an endorsement or an approval by Vishay of any of the products, services or opinions of the corporation, organization or individual associated with the third-party website. Vishay disclaims any and all liability and bears no responsibility for the accuracy, legality or content of the third-party website or for that of subsequent links.

Vishay products are not designed for use in life-saving or life-sustaining applications or any application in which the failure of the Vishay product could result in personal injury or death unless specifically qualified in writing by Vishay. Customers using or selling Vishay products not expressly indicated for use in such applications do so at their own risk. Please contact authorized Vishay personnel to obtain written terms and conditions regarding products designed for such applications.

No license, express or implied, by estoppel or otherwise, to any intellectual property rights is granted by this document or by any conduct of Vishay. Product names and markings noted herein may be trademarks of their respective owners.

© 2024 VISHAY INTERTECHNOLOGY, INC. ALL RIGHTS RESERVED

THIS DOCUMENT IS SUBJECT TO CHANGE WITHOUT NOTICE. THE PRODUCTS DESCRIBED HEREIN AND THIS DOCUMENT ARE SUBJECT TO SPECIFIC DISCLAIMERS, SET FORTH AT www.vishay.com/doc?91000