# 7/8" (22.2 mm) Multi Turn Wirewound Potentiometer - 533: 3 Turns / 534: 10 Turns / 535: 5 Turns



## FEATURES

- Bushing and servo mount designs available
- Linearity ± 0.25 %, down to 0.05 % on request
- Special resistance tolerances to 1 %
- Rear shaft extensions and support bearing
- Metric shaft available
- Dual gang configuration and concentric shafts
- High torque, center tap, slipping clutch on request
- Special markings and front shaft extensions
- Material categorization: for definitions of compliance please see www.vishay.com/doc?99912

RoHS COMPLIANT

## DESIGN SUPPORT TOOLS

click logo to get started

3D Models Available

| QUICK REFERENCE DATA | |
|---|---|
| Sensor type | ROTATIONAL, multi turn wirewound |
| Output type | Output by turrets |
| Market appliance | Industrial |
| Dimensions | 7/8" (22.2 mm) |

| ELECTRICAL SPECIFICATIONS | | | |
|---|---|---|---|
| **PARAMETER** | **MODEL 533** | **MODEL 534** | **MODEL 535** |
| Resistance range - standard values | 50 Ω to 20 kΩ | 100 Ω to 100 kΩ | 50 Ω to 50 kΩ |
| Capability range | 5 Ω to 60 kΩ | 10 Ω to 200 kΩ | 5 Ω to 100 kΩ |
| Standard tolerance | ± 5 % | ± 5 % | ± 5 % |
| Linearity (independent) | ± 0.25 % | ± 0.25 % | ± 0.25 % |
| Noise | 100 Ω ENR | 100 Ω ENR | 100 Ω ENR |
| Rotation (electrical and mechanical) | 1080° +10° -0° | 3600° +10° -0° | 1800° +10° -0° |
| Power rating (at 70 °C) | 1.0 W | 2.0 W | 1.5 W |
| Insulation resistance | 1000 MΩ minimum 500 $V_{DC}$ | | |
| Dielectric strength | 1000 $V_{RMS}$ minimum 60 Hz | | |
| Absolute minimum resistance | Not to exceed linearity x total resistance or 1 Ω, whichever is greater | | |
| Temperature coefficient | 20 ppm/°C (standard values, wire only) | | |
| End voltage | 0.25 % of total applied voltage, maximum | | |
| Phasing | CCW end points - section 2 phased to section 1 within ± 2° | | |
| Taps | Center tap only | | |

| MARKING | |
|---|---|
| Unit identification | Manufacturer's name and model number, resistance value and tolerance, linearity specification date code and terminal identification.<br>Example of a marking for a standard part: 534-11103 |

| RESISTANCE VALUES | |
|---|---|
| **533** (Ω) | 50, 100, 200, 500, 1K, 2K, 5K, 10K, 20K |
| **534** (Ω) | 100, 200, 500, 1K, 2K, 5K, 10K, 20K, 50K, 100K |
| **535** (Ω) | 50, 100, 200, 500, 1K, 2K, 5K, 10K, 20K, 50K |



For technical questions, contact: sferprecisionpot@vishay.com

THIS DOCUMENT IS SUBJECT TO CHANGE WITHOUT NOTICE. THE PRODUCTS DESCRIBED HEREIN AND THIS DOCUMENT ARE SUBJECT TO SPECIFIC DISCLAIMERS, SET FORTH AT www.vishay.com/doc?91000

## ORDERING INFORMATION

| 5 | 3 | 4 | B | 2 | 1 | 0 | 3 | 2 | 0 | 3 | J | C | 4 | 7 | 0 |
|---|---|---|---|---|---|---|---|---|---|---|---|---|---|---|---|

| MODEL | STYLE | GANGS | OHMIC VALUE GANGS Nº 1 | OHMIC VALUE GANGS Nº 2 | TOLERANCE ON OHMIC VALUE | LINEARITY | SPECIAL REQUEST |
|---|---|---|---|---|---|---|---|
| **533**<br>**534**<br>**535** | **B**: bushing<br>**S**: servo | **1**<br>**2** | **470** = 47 Ω<br>**222** = 2.200 Ω<br>**103** = 10 kΩ<br>For ohmic value range see electrical specification | **470** = 47 Ω<br>**222** = 2.200 Ω<br>**103** = 10 kΩ<br>For ohmic value range see electrical specification | **J** = ± 5 %<br>**F** = ± 1 % | **C** = ± 0.25 %<br>**L** = ± 0.2 % | Special code<br>**xxxx** |

## PART NUMBER DESCRIPTION (for information only)

| 534- | 1 | 2 | 103 | 203 | xxxx |
|---|---|---|---|---|---|
| MODEL | STYLE | GANGS | OHMIC VALUE GANGS Nº 1 | OHMIC VALUE GANGS Nº 2 | SPECIAL |
| | **B**: 1<br>**S**: 2 | | | | |

## SINGLE SECTION DIMENSIONS in inches (millimeters)

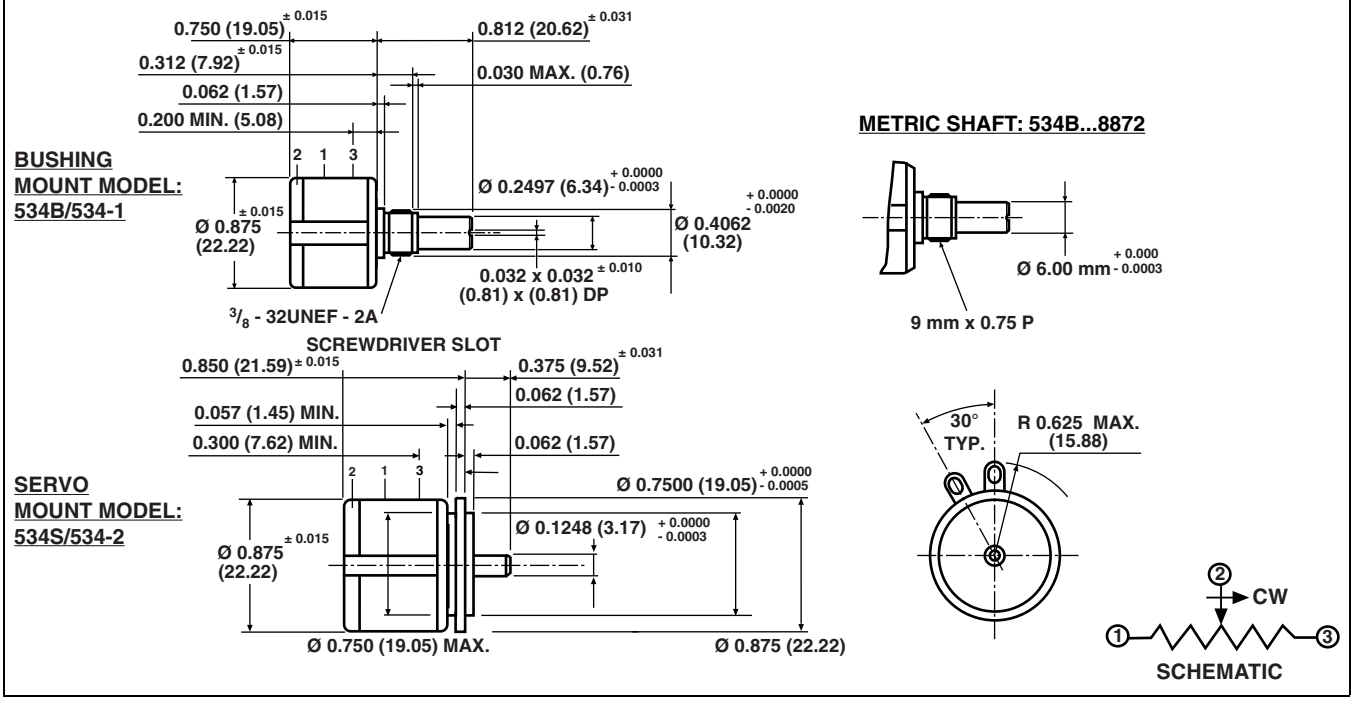


Mounting hardware, washer and panel nut, nickel plated



For technical questions, contact: sferprecisionpot@vishay.com

THIS DOCUMENT IS SUBJECT TO CHANGE WITHOUT NOTICE. THE PRODUCTS DESCRIBED HEREIN AND THIS DOCUMENT ARE SUBJECT TO SPECIFIC DISCLAIMERS, SET FORTH AT www.vishay.com/doc?91000

## MECHANICAL SPECIFICATIONS

| PARAMETER | | |
|---|---|---|
| Bearing type | Bushing: sleeve bearing | Servo: ball bearing |
| Torque (maximums): starting<br>Section 1<br>Section 2 | **534**<br>0.5 oz.-in (36 g-cm)<br>0.9 oz.-in (65 g-cm) | **533/535**<br>0.7 oz.-in (50 g-cm)<br>1.1 oz.-in (79 g-cm) |
| Torque (maximums): running<br>Section 1<br>Section 2 | **534**<br>0.4 oz.-in (28.80 g-cm)<br>0.7 oz.-in (50.40 g-cm) | **533/535**<br>0.6 oz.-in (43.20 g-cm)<br>0.9 oz.-in (64.8 g-cm) |
| Weight (maximums)<br>Section1<br>Section 2 | 0.75 oz. (21.26 g)<br>1.25 oz. (35.44 g) | |
| Stop strength | 75 oz.-in (static) (5.4 kg-cm) | |
| Ganging | 2 sections maximum | |

## POWER RATING CHART

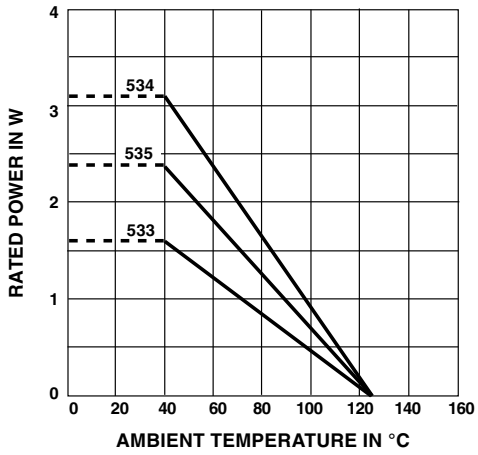


## ENVIRONMENTAL SPECIFICATIONS

| | |
|---|---|
| Vibration | 15 *g* thru 2000 Hz |
| Shock | 50 *g* |
| Rotational life (shaft revolution)<br>533<br>534<br>534 (servo)<br>535 | <br>300 000<br>1 000 000<br>> 1 000 000<br>500 000 |
| Load life | 900 h |
| Temperature range | -55 °C to +125 °C |

**Note**

- Nothing stated herein shall be construed as a guarantee of quality or durability

## RESISTANCE ELEMENT DATA

| RESISTANCE VALUE (Ω) | | | RESOLUTION (%) | | | OHMS PER TURN | | | MAXIMUM CURRENT AT 70 °C AMBIENT (mA) | | | MAXIMUM VOLTAGE ACROSS COIL (V) | | |
|---|---|---|---|---|---|---|---|---|---|---|---|---|---|---|
| **533** | **534** | **535** | **533** | **534** | **535** | **533** | **534** | **535** | **533** | **534** | **535** | **533** | **534** | **535** |
| 50 | - | 50 | 0.149 | - | 0.120 | 0.0746 | - | 0.0603 | 141.0 | - | 173.0 | 7.07 | - | 8.66 |
| 100 | 100 | 100 | 0.111 | 0.060 | 0.075 | 0.1114 | 0.0603 | 0.0746 | 100.0 | 141.0 | 122.0 | 10.0 | 14.1 | 12.2 |
| 200 | 200 | 200 | 0.097 | 0.037 | 0.061 | 0.1954 | 0.0746 | 0.1220 | 70.7 | 100.0 | 86.6 | 14.1 | 20.0 | 17.3 |
| 500 | 500 | 500 | 0.069 | 0.031 | 0.049 | 0.3424 | 0.1520 | 0.2459 | 44.7 | 63.2 | 54.7 | 22.4 | 31.6 | 27.4 |
| 1K | 1K | 1K | 0.063 | 0.025 | 0.041 | 0.6331 | 0.2459 | 0.4113 | 31.6 | 44.7 | 38.7 | 31.6 | 44.7 | 38.7 |
| 2K | 2K | 2K | 0.041 | 0.021 | 0.031 | 0.8206 | 0.4113 | 0.6331 | 22.4 | 31.6 | 27.4 | 44.7 | 63.2 | 54.8 |
| 5K | 5K | 5K | 0.044 | 0.016 | 0.034 | 2.2330 | 0.8206 | 1.7230 | 14.1 | 20.0 | 17.3 | 70.7 | 100.0 | 86.6 |
| 10K | 10K | 10K | 0.034 | 0.017 | 0.030 | 3.4510 | 1.7230 | 3.0160 | 10.0 | 14.1 | 12.2 | 100.0 | 141.0 | 122.0 |
| 20K | 20K | 20K | 0.031 | 0.015 | 0.020 | 6.1790 | 3.0160 | 3.9910 | 7.07 | 10.0 | 8.66 | 141.0 | 200.0 | 173.0 |
| - | 50K | 50K | - | 0.009 | 0.015 | - | 4.6690 | 7.4560 | - | 6.32 | 5.47 | - | 316.0 | 274.0 |
| - | 100K | - | - | 0.007 | - | - | 7.4560 | - | - | 4.47 | - | - | 447.0 | - |
| - | - | - | - | - | - | - | - | - | - | - | - | - | - | - |
| - | - | - | - | - | - | - | - | - | - | - | - | - | - | - |



For technical questions, contact: sferprecisionpot@vishay.com

THIS DOCUMENT IS SUBJECT TO CHANGE WITHOUT NOTICE. THE PRODUCTS DESCRIBED HEREIN AND THIS DOCUMENT ARE SUBJECT TO SPECIFIC DISCLAIMERS, SET FORTH AT www.vishay.com/doc?91000

# Disclaimer

ALL PRODUCT, PRODUCT SPECIFICATIONS AND DATA ARE SUBJECT TO CHANGE WITHOUT NOTICE TO IMPROVE RELIABILITY, FUNCTION OR DESIGN OR OTHERWISE.

Vishay Intertechnology, Inc., its affiliates, agents, and employees, and all persons acting on its or their behalf (collectively, “Vishay”), disclaim any and all liability for any errors, inaccuracies or incompleteness contained in any datasheet or in any other disclosure relating to any product.

Vishay makes no warranty, representation or guarantee regarding the suitability of the products for any particular purpose or the continuing production of any product. To the maximum extent permitted by applicable law, Vishay disclaims (i) any and all liability arising out of the application or use of any product, (ii) any and all liability, including without limitation special, consequential or incidental damages, and (iii) any and all implied warranties, including warranties of fitness for particular purpose, non-infringement and merchantability.

Statements regarding the suitability of products for certain types of applications are based on Vishay's knowledge of typical requirements that are often placed on Vishay products in generic applications. Such statements are not binding statements about the suitability of products for a particular application. It is the customer's responsibility to validate that a particular product with the properties described in the product specification is suitable for use in a particular application. Parameters provided in datasheets and / or specifications may vary in different applications and performance may vary over time. All operating parameters, including typical parameters, must be validated for each customer application by the customer's technical experts. Product specifications do not expand or otherwise modify Vishay's terms and conditions of purchase, including but not limited to the warranty expressed therein.

Hyperlinks included in this datasheet may direct users to third-party websites. These links are provided as a convenience and for informational purposes only. Inclusion of these hyperlinks does not constitute an endorsement or an approval by Vishay of any of the products, services or opinions of the corporation, organization or individual associated with the third-party website. Vishay disclaims any and all liability and bears no responsibility for the accuracy, legality or content of the third-party website or for that of subsequent links.

Vishay products are not designed for use in life-saving or life-sustaining applications or any application in which the failure of the Vishay product could result in personal injury or death unless specifically qualified in writing by Vishay. Customers using or selling Vishay products not expressly indicated for use in such applications do so at their own risk. Please contact authorized Vishay personnel to obtain written terms and conditions regarding products designed for such applications.

No license, express or implied, by estoppel or otherwise, to any intellectual property rights is granted by this document or by any conduct of Vishay. Product names and markings noted herein may be trademarks of their respective owners.

***© 2025 VISHAY INTERTECHNOLOGY, INC. ALL RIGHTS RESERVED***



THIS DOCUMENT IS SUBJECT TO CHANGE WITHOUT NOTICE. THE PRODUCTS DESCRIBED HEREIN AND THIS DOCUMENT ARE SUBJECT TO SPECIFIC DISCLAIMERS, SET FORTH AT www.vishay.com/doc?91000