Zener Diodes



SMA (DO-214AC)

FEATURES

- High reliability
- Voltage range 3.3 V to 100 V
- Fits onto 5 mm SMD footpads
- Wave and reflow solderable
- AEC-Q101 qualified available
- Base P/N-M3 - halogen-free, RoHS-compliant, and commercial grade
- Base P/NHM3 - halogen-free, RoHS-compliant, and AEC-Q101 qualified
- Material categorization: for definitions of compliance please see www.vishay.com/doc?99912

AUTOMOTIVE GRADE Available

RoHS COMPLIANT

HALOGEN FREE

ADDITIONAL RESOURCES

3D Models

APPLICATIONS

- Voltage stabilization

PRIMARY CHARACTERISTICS		
PARAMETER	VALUE	UNIT
V_Z range nom.	3.3 to 100	V
Test current I_{ZT}	2.7 to 80	mA
V_{BR}	5.2 to 95	V
V_{WM}	4.7 to 90	V
P_{PPM}	40	W
T_J max.	150	°C
V_Z specification	Pulse current	
Circuit configuration	Single	
Polarity	Uni-directional	

ORDERING INFORMATION			
DEVICE NAME	ORDERING CODE	TAPED UNITS PER REEL	MINIMUM ORDER QUANTITY
BZG05C-M-series	BZG05Cxxx-M3-08	1500 per 7" reel	6000/box
BZG05C-M-series	BZG05Cxxx-M3-18	6000 per 13" reel	6000/box
BZG05C-M-series	BZG05Cxxx-HM3-08	1500 per 7" reel	6000/box
BZG05C-M-series	BZG05Cxxx-HM3-18	6000 per 13" reel	6000/box

PACKAGE				
PACKAGE NAME	WEIGHT	MOLDING COMPOUND FLAMMABILITY RATING	MOISTURE SENSITIVITY LEVEL	SOLDERING CONDITIONS
SMA (DO-214AC)	73 mg	UL 94 V-0	MSL level 1 (according J-STD-020)	Peak temperature max. 260 °C

ABSOLUTE MAXIMUM RATINGS (T_{amb} = 25 °C, unless otherwise specified)				
PARAMETER	TEST CONDITION	SYMBOL	VALUE	UNIT
Power dissipation	R_{thJA} < 30 K/W, T_{amb} = 60 °C	P_{tot}	3000	mW
	R_{thJA} < 100 K/W, T_{amb} = 25 °C	P_{tot}	1250	mW
Non repetitive peak surge power dissipation	t_p = 100 µs sq. pulse, T_j = 25 °C prior to surge	P_{ZSM}	60	W
Junction to lead		R_{thJL}	30	K/W
Junction to ambient air	Mounted on epoxy-glass hard tissue, fig. 1a	R_{thJA}	150	K/W
	Mounted on epoxy-glass hard tissue, fig. 1b	R_{thJA}	125	K/W
	Mounted on Al-oxide-ceramic (Al_2O_3), fig. 1b	R_{thJA}	100	K/W
Junction temperature		T_j	150	°C
Storage temperature range		T_{stg}	-65 to +150	°C
Operating temperature range		T_{op}	-65 to +150	°C
Forward voltage (max.)	I_F = 0.2 A	V_F	1.2	V

For technical questions within your region: DiodesAmericas@vishay.com, DiodesAsia@vishay.com, DiodesEurope@vishay.com

THIS DOCUMENT IS SUBJECT TO CHANGE WITHOUT NOTICE. THE PRODUCTS DESCRIBED HEREIN AND THIS DOCUMENT ARE SUBJECT TO SPECIFIC DISCLAIMERS, SET FORTH AT www.vishay.com/doc?91000

ELECTRICAL CHARACTERISTICS (T_{amb} = 25 °C, unless otherwise specified)

PART NUMBER	ZENER VOLTAGE RANGE			TEST CURRENT		REVERSE LEAKAGE CURRENT		DYNAMIC RESISTANCE		TEMPERATURE COEFFICIENT	
	V_Z at I_{ZT1}			I_{ZT1}	I_{ZT2}	I_R at V_R		Z_Z at I_{ZT1}	Z_ZK at I_{ZT2}	TC_{VZ} at I_{ZT1}	
	V			mA	mA	µA	V	Ω		%/K	
	MIN.	NOM.	MAX.			MAX.		MAX.	MAX.	MIN.	MAX.
BZG05C3V3-M	3.1	3.3	3.5	80	1	40	1	20	400	-0.08	-0.05
BZG05C3V6-M	3.4	3.6	3.8	60	1	20	1	20	500	-0.08	-0.05
BZG05C3V9-M	3.7	3.9	4.1	60	1	10	1	15	500	-0.07	-0.02
BZG05C4V3-M	4	4.3	4.6	50	1	3	1	13	500	-0.07	-0.01
BZG05C4V7-M	4.4	4.7	5	45	1	3	1	13	600	-0.03	0.04
BZG05C5V1-M	4.8	5.1	5.4	45	1	1	1.5	10	500	-0.01	0.04
BZG05C5V6-M	5.2	5.6	6	45	1	1	2	7	400	0	0.045
BZG05C6V2-M	5.8	6.2	6.6	35	1	1	3	4	300	0.01	0.055
BZG05C6V8-M	6.4	6.8	7.2	35	1	1	4	3.5	300	0.015	0.06
BZG05C7V5-M	7	7.5	7.9	35	0.5	1	4.5	3	200	0.02	0.065
BZG05C8V2-M	7.7	8.2	8.7	25	0.5	1	6.2	5	200	0.03	0.07
BZG05C9V1-M	8.5	9.1	9.6	25	0.5	1	6.8	5	200	0.035	0.075
BZG05C10-M	9.4	10	10.6	25	0.5	0.5	7	7	200	0.04	0.08
BZG05C11-M	10.4	11	11.6	20	0.5	0.5	8.2	8	300	0.045	0.08
BZG05C12-M	11.4	12	12.7	20	0.5	0.5	9.1	9	350	0.045	0.085
BZG05C13-M	12.4	13	14.1	20	0.5	0.5	10	10	400	0.05	0.085
BZG05C15-M	13.8	15	15.6	15	0.5	0.5	11	15	500	0.055	0.09
BZG05C16-M	15.3	16	17.1	15	0.5	0.5	12	15	500	0.055	0.09
BZG05C18-M	16.8	18	19.1	15	0.5	0.5	13	20	500	0.06	0.09
BZG05C20-M	18.8	20	21.2	10	0.5	0.5	15	24	600	0.06	0.09
BZG05C22-M	20.8	22	23.3	10	0.5	0.5	16	25	600	0.06	0.095
BZG05C24-M	22.8	24	25.6	10	0.5	0.5	18	25	600	0.06	0.095
BZG05C27-M	25.1	27	28.9	8	0.25	0.5	20	30	750	0.06	0.095
BZG05C30-M	28	30	32	8	0.25	0.5	22	30	1000	0.06	0.095
BZG05C33-M	31	33	35	8	0.25	0.5	24	35	1000	0.06	0.095
BZG05C36-M	34	36	38	8	0.25	0.5	27	40	1000	0.07	0.11
BZG05C39-M	37	39	41	6	0.25	0.5	30	50	1000	0.07	0.11
BZG05C43-M	40	43	46	6	0.25	0.5	33	50	1000	0.07	0.11
BZG05C47-M	44	47	50	4	0.25	0.5	36	90	1500	0.07	0.11
BZG05C51-M	48	51	54	4	0.25	0.5	39	115	1500	0.08	0.12
BZG05C56-M	52	56	60	4	0.25	0.5	43	120	2000	0.08	0.12
BZG05C62-M	58	62	66	4	0.25	0.5	47	125	2000	0.08	0.12
BZG05C68-M	64	68	72	4	0.25	0.5	51	130	2000	0.08	0.12
BZG05C75-M	70	75	79	4	0.25	0.5	56	135	2000	0.08	0.12
BZG05C82-M	77	82	87	2.7	0.25	0.5	62	200	3000	0.08	0.12
BZG05C91-M	85	91	96	2.7	0.25	0.5	68	250	3000	0.08	0.12
BZG05C100-M	95	100	106	2.7	0.25	0.5	75	350	3000	0.08	0.12

For technical questions within your region: DiodesAmericas@vishay.com, DiodesAsia@vishay.com, DiodesEurope@vishay.com
THIS DOCUMENT IS SUBJECT TO CHANGE WITHOUT NOTICE. THE PRODUCTS DESCRIBED HEREIN AND THIS DOCUMENT ARE SUBJECT TO SPECIFIC DISCLAIMERS, SET FORTH AT www.vishay.com/doc?91000

BASIC CHARACTERISTICS (T_{amb} = 25 °C, unless otherwise specified)

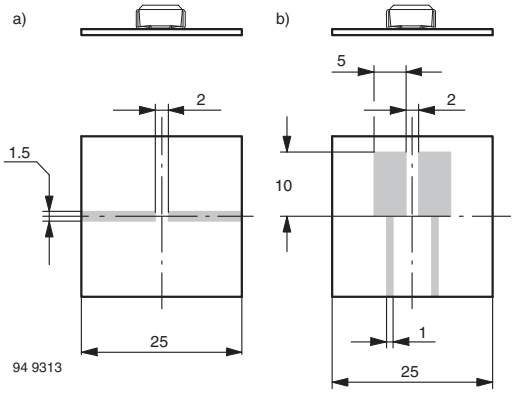

Fig. 1 - Boards for R_{thJA} Definition (Copper Overlay 35 µ)

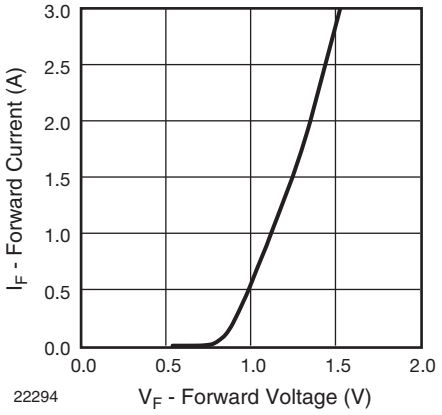

Fig. 3 - Forward Current vs. Forward Voltage

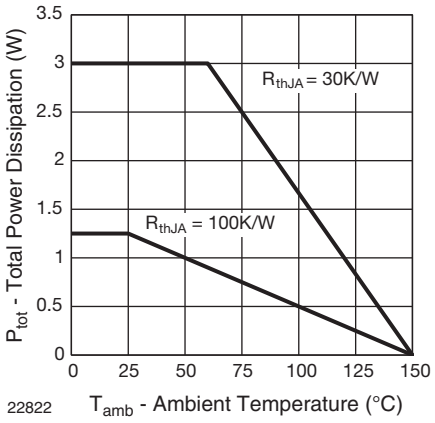

Fig. 2 - Typ. Total Power Dissipation vs. Ambient Temperature

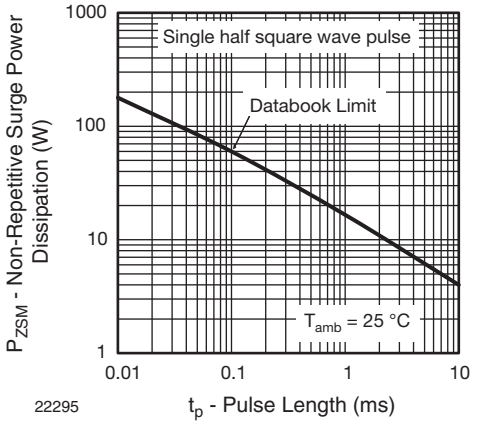

Fig. 4 - Non Repetitive Surge Power Dissipation vs. Pulse Length

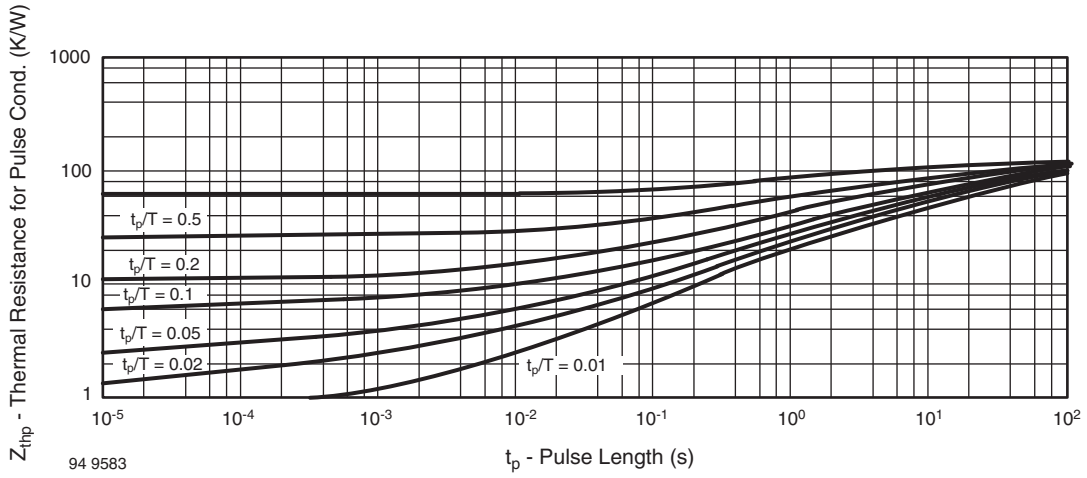

Fig. 5 - Thermal Response

For technical questions within your region: DiodesAmericas@vishay.com, DiodesAsia@vishay.com, DiodesEurope@vishay.com
THIS DOCUMENT IS SUBJECT TO CHANGE WITHOUT NOTICE. THE PRODUCTS DESCRIBED HEREIN AND THIS DOCUMENT ARE SUBJECT TO SPECIFIC DISCLAIMERS, SET FORTH AT www.vishay.com/doc?91000

PACKAGE DIMENSIONS in millimeters (inches): **SMA (DO-214AC)**

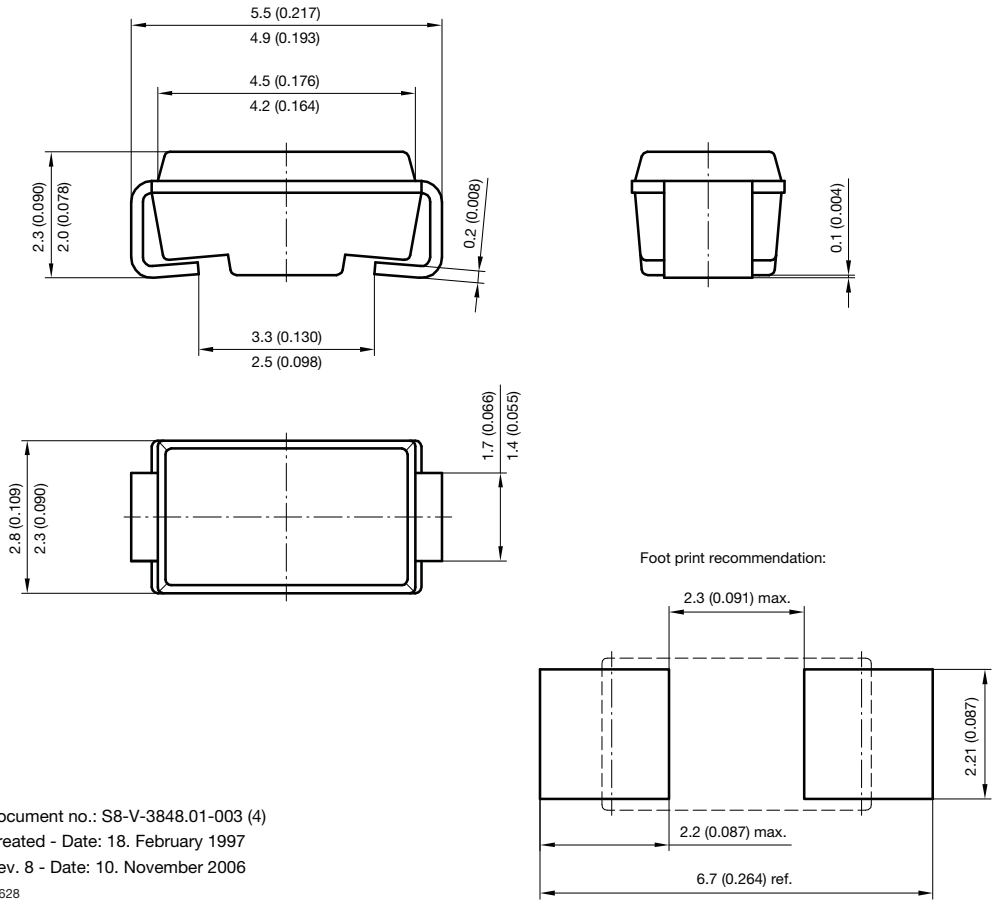

Document no.: S8-V-3848.01-003 (4)
Created - Date: 18. February 1997
Rev. 8 - Date: 10. November 2006
19628

For technical questions within your region: DiodesAmericas@vishay.com, DiodesAsia@vishay.com, DiodesEurope@vishay.com
THIS DOCUMENT IS SUBJECT TO CHANGE WITHOUT NOTICE. THE PRODUCTS DESCRIBED HEREIN AND THIS DOCUMENT ARE SUBJECT TO SPECIFIC DISCLAIMERS, SET FORTH AT www.vishay.com/doc?91000

Disclaimer

ALL PRODUCT, PRODUCT SPECIFICATIONS AND DATA ARE SUBJECT TO CHANGE WITHOUT NOTICE TO IMPROVE RELIABILITY, FUNCTION OR DESIGN OR OTHERWISE.

Vishay Intertechnology, Inc., its affiliates, agents, and employees, and all persons acting on its or their behalf (collectively, “Vishay”), disclaim any and all liability for any errors, inaccuracies or incompleteness contained in any datasheet or in any other disclosure relating to any product.

Vishay makes no warranty, representation or guarantee regarding the suitability of the products for any particular purpose or the continuing production of any product. To the maximum extent permitted by applicable law, Vishay disclaims (i) any and all liability arising out of the application or use of any product, (ii) any and all liability, including without limitation special, consequential or incidental damages, and (iii) any and all implied warranties, including warranties of fitness for particular purpose, non-infringement and merchantability.

Statements regarding the suitability of products for certain types of applications are based on Vishay's knowledge of typical requirements that are often placed on Vishay products in generic applications. Such statements are not binding statements about the suitability of products for a particular application. It is the customer's responsibility to validate that a particular product with the properties described in the product specification is suitable for use in a particular application. Parameters provided in datasheets and / or specifications may vary in different applications and performance may vary over time. All operating parameters, including typical parameters, must be validated for each customer application by the customer's technical experts. Product specifications do not expand or otherwise modify Vishay's terms and conditions of purchase, including but not limited to the warranty expressed therein.

Hyperlinks included in this datasheet may direct users to third-party websites. These links are provided as a convenience and for informational purposes only. Inclusion of these hyperlinks does not constitute an endorsement or an approval by Vishay of any of the products, services or opinions of the corporation, organization or individual associated with the third-party website. Vishay disclaims any and all liability and bears no responsibility for the accuracy, legality or content of the third-party website or for that of subsequent links.

Vishay products are not designed for use in life-saving or life-sustaining applications or any application in which the failure of the Vishay product could result in personal injury or death unless specifically qualified in writing by Vishay. Customers using or selling Vishay products not expressly indicated for use in such applications do so at their own risk. Please contact authorized Vishay personnel to obtain written terms and conditions regarding products designed for such applications.

No license, express or implied, by estoppel or otherwise, to any intellectual property rights is granted by this document or by any conduct of Vishay. Product names and markings noted herein may be trademarks of their respective owners.

© 2024 VISHAY INTERTECHNOLOGY, INC. ALL RIGHTS RESERVED

THIS DOCUMENT IS SUBJECT TO CHANGE WITHOUT NOTICE. THE PRODUCTS DESCRIBED HEREIN AND THIS DOCUMENT ARE SUBJECT TO SPECIFIC DISCLAIMERS, SET FORTH AT www.vishay.com/doc?91000