Zener Diodes



FEATURES

- High reliability
- Voltage range 3.3 V to 100 V
- Fits onto 5 mm SMD footpads
- Wave and reflow solderable
- AEC-Q101 qualified available
- Base P/N-E3 - RoHS-compliant, commercial grade
- Base P/NHE3 - RoHS-compliant, AEC-Q101 qualified
- Material categorization: for definitions of compliance please see www.vishay.com/doc?99912

RoHS COMPLIANT

APPLICATIONS

- Voltage stabilization

PRIMARY CHARACTERISTICS		
PARAMETER	VALUE	UNIT
V_Z range nom.	3.3 to 100	V
Test current I_{ZT}	2.7 to 80	mA
V_{BR}	5.2 to 95	V
V_{WM}	4.7 to 90	V
P_{PPM}	40	W
T_J max.	150	°C
V_Z specification	Pulse current	
Int. construction	Single	
Polarity	Uni-directional	

ORDERING INFORMATION			
DEVICE NAME	ORDERING CODE	TAPED UNITS PER REEL	MINIMUM ORDER QUANTITY
BZG05C-series	BZG05C-series-E3-TR	1500 per 7" reel	6000/box
BZG05C-series	BZG05C-series-E3-TR3	6000 per 13" reel	6000/box
BZG05C-series	BZG05C-series-HE3-TR	1500 per 7" reel	6000/box
BZG05C-series	BZG05C-series-HE3-TR3	6000 per 13" reel	6000/box

PACKAGE				
PACKAGE NAME	WEIGHT	MOLDING COMPOUND FLAMMABILITY RATING	MOISTURE SENSITIVITY LEVEL	SOLDERING CONDITIONS
DO-214AC	77 mg	UL 94 V-0	MSL level 1 (according J-STD-020)	260 °C/10 s at terminals

ABSOLUTE MAXIMUM RATINGS (T_{amb} = 25 °C, unless otherwise specified)				
PARAMETER	TEST CONDITION	SYMBOL	VALUE	UNIT
Power dissipation	R_{thJA} < 30 K/W, T_{amb} = 60 °C	P_{tot}	3000	mW
	R_{thJA} < 100 K/W, T_{amb} = 25 °C	P_{tot}	1250	mW
Non repetitive peak surge power dissipation	t_p = 100 µs sq. pulse, T_j = 25 °C prior to surge	P_{ZSM}	60	W
Junction to lead		R_{thJL}	30	K/W
Junction to ambient air	Mounted on epoxy-glass hard tissue, fig. 1a	R_{thJA}	150	K/W
	Mounted on epoxy-glass hard tissue, fig. 1b	R_{thJA}	125	K/W
	Mounted on Al-oxid-ceramic (Al_2O_3), fig. 1b	R_{thJA}	100	K/W
Junction temperature		T_j	150	°C
Storage temperature range		T_{stg}	-65 to +150	°C
Forward voltage (max.)	I_F = 0.2 A	V_F	1.2	V

For technical questions within your region: DiodesAmericas@vishay.com, DiodesAsia@vishay.com, DiodesEurope@vishay.com

THIS DOCUMENT IS SUBJECT TO CHANGE WITHOUT NOTICE. THE PRODUCTS DESCRIBED HEREIN AND THIS DOCUMENT ARE SUBJECT TO SPECIFIC DISCLAIMERS, SET FORTH AT www.vishay.com/doc?91000

ELECTRICAL CHARACTERISTICS (T_{amb} = 25 °C, unless otherwise specified)

PART NUMBER	ZENER VOLTAGE RANGE			TEST CURRENT		REVERSE LEAKAGE CURRENT		DYNAMIC RESISTANCE		TEMPERATURE COEFFICIENT	
	V_Z at I_{ZT1}			I_{ZT1}	I_{ZT2}	I_R at V_R		Z_Z at I_{ZT1}	Z_ZK at I_{ZT2}	TC_{VZ} at I_{ZT1}	
	V			mA	mA	µA	V	Ω		%/K	
	MIN.	NOM.	MAX.			MAX.		MAX.	MAX.	MIN.	MAX.
BZG05C3V3	3.1	3.3	3.5	80	1	40	1	20	400	-0.08	-0.05
BZG05C3V6	3.4	3.6	3.8	60	1	20	1	20	500	-0.08	-0.05
BZG05C3V9	3.7	3.9	4.1	60	1	10	1	15	500	-0.07	-0.02
BZG05C4V3	4	4.3	4.6	50	1	3	1	13	500	-0.07	-0.01
BZG05C4V7	4.4	4.7	5	45	1	3	1	13	600	-0.03	0.04
BZG05C5V1	4.8	5.1	5.4	45	1	1	1.5	10	500	-0.01	0.04
BZG05C5V6	5.2	5.6	6	45	1	1	2	7	400	0	0.045
BZG05C6V2	5.8	6.2	6.6	35	1	1	3	4	300	0.01	0.055
BZG05C6V8	6.4	6.8	7.2	35	1	1	4	3.5	300	0.015	0.06
BZG05C7V5	7	7.5	7.9	35	0.5	1	4.5	3	200	0.02	0.065
BZG05C8V2	7.7	8.2	8.7	25	0.5	1	6.2	5	200	0.03	0.07
BZG05C9V1	8.5	9.1	9.6	25	0.5	1	6.8	5	200	0.035	0.075
BZG05C10	9.4	10	10.6	25	0.5	0.5	7	7	200	0.04	0.08
BZG05C11	10.4	11	11.6	20	0.5	0.5	8.2	8	300	0.045	0.08
BZG05C12	11.4	12	12.7	20	0.5	0.5	9.1	9	350	0.045	0.085
BZG05C13	12.4	13	14.1	20	0.5	0.5	10	10	400	0.05	0.085
BZG05C15	13.8	15	15.6	15	0.5	0.5	11	15	500	0.055	0.09
BZG05C16	15.3	16	17.1	15	0.5	0.5	12	15	500	0.055	0.09
BZG05C18	16.8	18	19.1	15	0.5	0.5	13	20	500	0.06	0.09
BZG05C20	18.8	20	21.2	10	0.5	0.5	15	24	600	0.06	0.09
BZG05C22	20.8	22	23.3	10	0.5	0.5	16	25	600	0.06	0.095
BZG05C24	22.8	24	25.6	10	0.5	0.5	18	25	600	0.06	0.095
BZG05C27	25.1	27	28.9	8	0.25	0.5	20	30	750	0.06	0.095
BZG05C30	28	30	32	8	0.25	0.5	22	30	1000	0.06	0.095
BZG05C33	31	33	35	8	0.25	0.5	24	35	1000	0.06	0.095
BZG05C36	34	36	38	8	0.25	0.5	27	40	1000	0.07	0.11
BZG05C39	37	39	41	6	0.25	0.5	30	50	1000	0.07	0.11
BZG05C43	40	43	46	6	0.25	0.5	33	50	1000	0.07	0.11
BZG05C47	44	47	50	4	0.25	0.5	36	90	1500	0.07	0.11
BZG05C51	48	51	54	4	0.25	0.5	39	115	1500	0.08	0.12
BZG05C56	52	56	60	4	0.25	0.5	43	120	2000	0.08	0.12
BZG05C62	58	62	66	4	0.25	0.5	47	125	2000	0.08	0.12
BZG05C68	64	68	72	4	0.25	0.5	51	130	2000	0.08	0.12
BZG05C75	70	75	79	4	0.25	0.5	56	135	2000	0.08	0.12
BZG05C82	77	82	87	2.7	0.25	0.5	62	200	3000	0.08	0.12
BZG05C91	85	91	96	2.7	0.25	0.5	68	250	3000	0.08	0.12
BZG05C100	95	100	106	2.7	0.25	0.5	75	350	3000	0.08	0.12

For technical questions within your region: DiodesAmericas@vishay.com, DiodesAsia@vishay.com, DiodesEurope@vishay.com
THIS DOCUMENT IS SUBJECT TO CHANGE WITHOUT NOTICE. THE PRODUCTS DESCRIBED HEREIN AND THIS DOCUMENT ARE SUBJECT TO SPECIFIC DISCLAIMERS, SET FORTH AT www.vishay.com/doc?91000

BASIC CHARACTERISTICS (T_{amb} = 25 °C, unless otherwise specified)

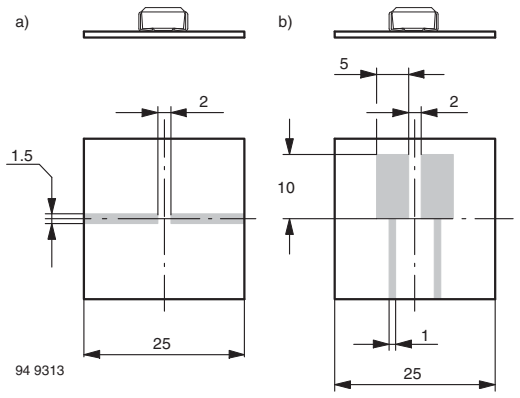

Fig. 1 - Boards for R_{thJA} Definition (Copper Overlay 35 µ)

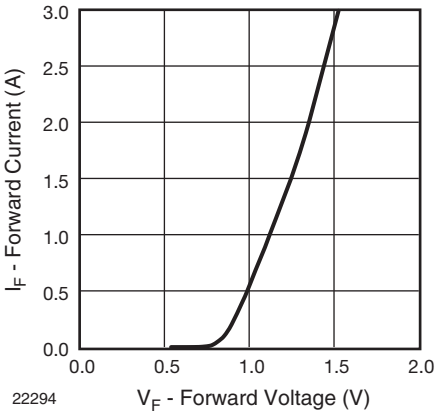

Fig. 3 - Forward Current vs. Forward Voltage

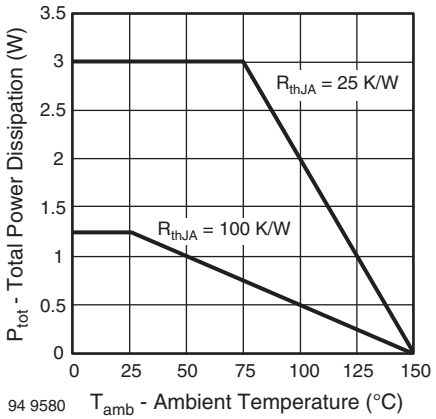

Fig. 2 - Typ. Total Power Dissipation vs. Ambient Temperature

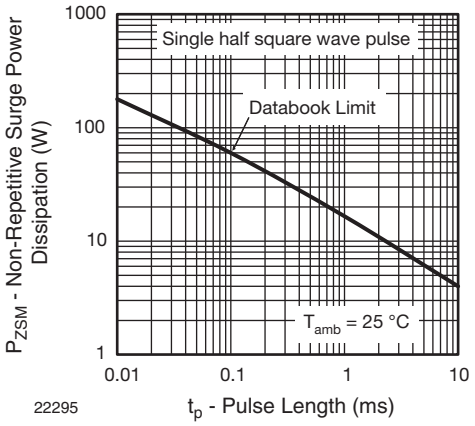

Fig. 4 - Non Repetitive Surge Power Dissipation vs. Pulse Length

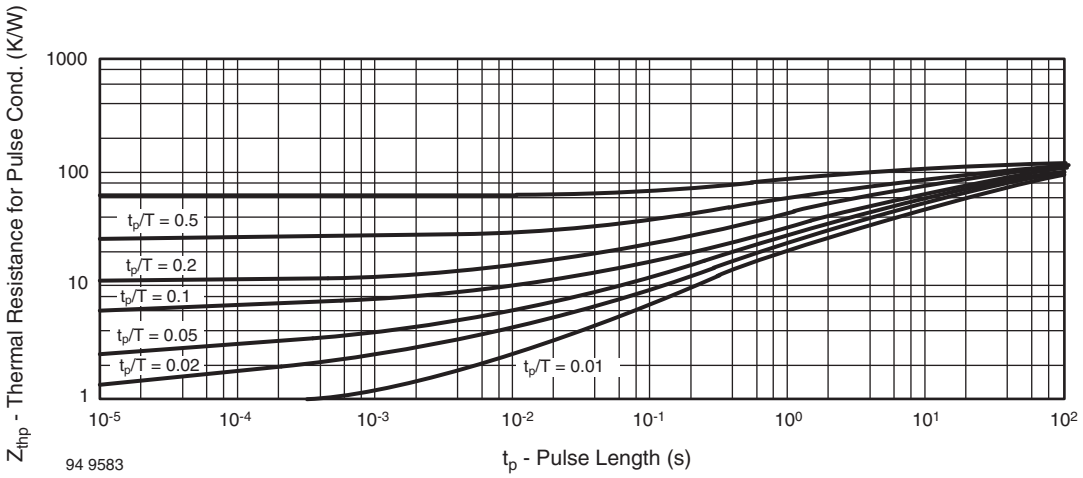

Fig. 5 - Thermal Response

For technical questions within your region: DiodesAmericas@vishay.com, DiodesAsia@vishay.com, DiodesEurope@vishay.com
THIS DOCUMENT IS SUBJECT TO CHANGE WITHOUT NOTICE. THE PRODUCTS DESCRIBED HEREIN AND THIS DOCUMENT ARE SUBJECT TO SPECIFIC DISCLAIMERS, SET FORTH AT www.vishay.com/doc?91000

PACKAGE DIMENSIONS in millimeters (inches): **DO-214AC**

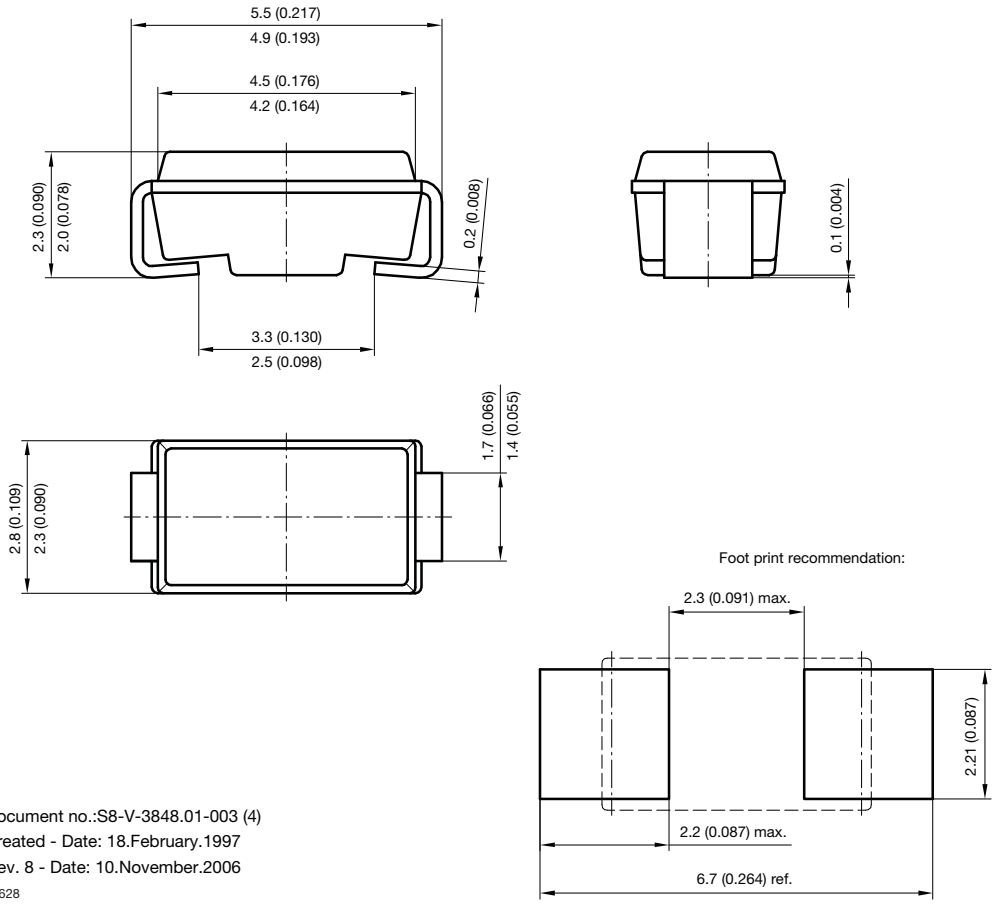

Document no.:S8-V-3848.01-003 (4)
Created - Date: 18.February.1997
Rev. 8 - Date: 10.November.2006
19628

For technical questions within your region: DiodesAmericas@vishay.com, DiodesAsia@vishay.com, DiodesEurope@vishay.com
THIS DOCUMENT IS SUBJECT TO CHANGE WITHOUT NOTICE. THE PRODUCTS DESCRIBED HEREIN AND THIS DOCUMENT ARE SUBJECT TO SPECIFIC DISCLAIMERS, SET FORTH AT www.vishay.com/doc?91000

Disclaimer

ALL PRODUCT, PRODUCT SPECIFICATIONS AND DATA ARE SUBJECT TO CHANGE WITHOUT NOTICE TO IMPROVE RELIABILITY, FUNCTION OR DESIGN OR OTHERWISE.

Vishay Intertechnology, Inc., its affiliates, agents, and employees, and all persons acting on its or their behalf (collectively, “Vishay”), disclaim any and all liability for any errors, inaccuracies or incompleteness contained in any datasheet or in any other disclosure relating to any product.

Vishay makes no warranty, representation or guarantee regarding the suitability of the products for any particular purpose or the continuing production of any product. To the maximum extent permitted by applicable law, Vishay disclaims (i) any and all liability arising out of the application or use of any product, (ii) any and all liability, including without limitation special, consequential or incidental damages, and (iii) any and all implied warranties, including warranties of fitness for particular purpose, non-infringement and merchantability.

Statements regarding the suitability of products for certain types of applications are based on Vishay’s knowledge of typical requirements that are often placed on Vishay products in generic applications. Such statements are not binding statements about the suitability of products for a particular application. It is the customer’s responsibility to validate that a particular product with the properties described in the product specification is suitable for use in a particular application. Parameters provided in datasheets and / or specifications may vary in different applications and performance may vary over time. All operating parameters, including typical parameters, must be validated for each customer application by the customer’s technical experts. Product specifications do not expand or otherwise modify Vishay’s terms and conditions of purchase, including but not limited to the warranty expressed therein.

Except as expressly indicated in writing, Vishay products are not designed for use in medical, life-saving, or life-sustaining applications or for any other application in which the failure of the Vishay product could result in personal injury or death. Customers using or selling Vishay products not expressly indicated for use in such applications do so at their own risk. Please contact authorized Vishay personnel to obtain written terms and conditions regarding products designed for such applications.

No license, express or implied, by estoppel or otherwise, to any intellectual property rights is granted by this document or by any conduct of Vishay. Product names and markings noted herein may be trademarks of their respective owners.

© 2017 VISHAY INTERTECHNOLOGY, INC. ALL RIGHTS RESERVED