Data Sheet | Item Number: 209-151

Pin terminals; insulated; suitable for 271 and 272 Series; green

https://www.wago.com/209-151



Color: green

Similar to illustration

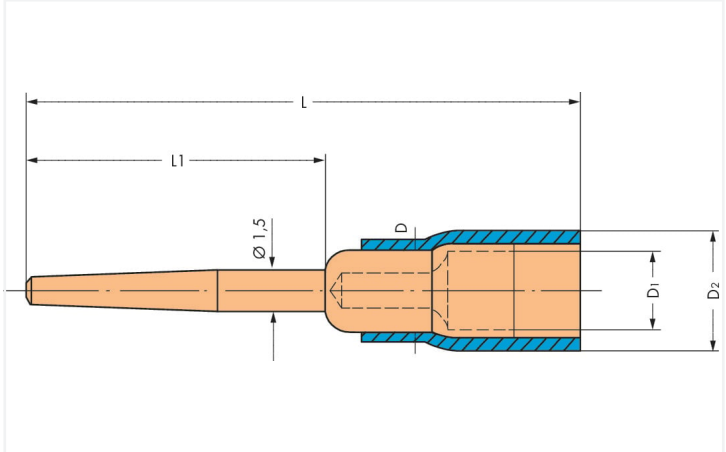

Dimensions in mm

Connection data

Strip length	4 … 4.5 mm / 0.16 … 0.18 inches

Physical data

Length	17 mm
Crimp length (length of sleeve)	7.5 mm
Inner Diameter plastic collar	3 mm
Diameter crimp sleeve inside	4.7 mm

Material data

Color	green
Fire load	0 MJ
Weight	0.5 g

Commercial data

Product Group	2 (Terminal Block Accessories)
eCl@ss 10.0	27-40-02-04
eCl@ss 9.0	27-40-02-04
ETIM 9.0	EC001052
ETIM 8.0	EC001052
PU (SPU)	100 pcs
Packaging type	Bag
Country of origin	PL
GTIN	4017332271523
Customs tariff number	85369010000
End of Sale	2020-09-01
End of Production	2020-09-06
End of Delivery	2020-09-16
End of Service and Repair	2022-09-01

Continued on next page

Environmental Product Compliance

RoHS Compliance Status	Compliant,No Exemption

Downloads

Environmental Product Compliance

Compliance Search

Environmental Product Compliance 209-151