Data Sheet | Item Number: 750-644
Bluetooth® RF Transceiver
https://www.wago.com/750-644



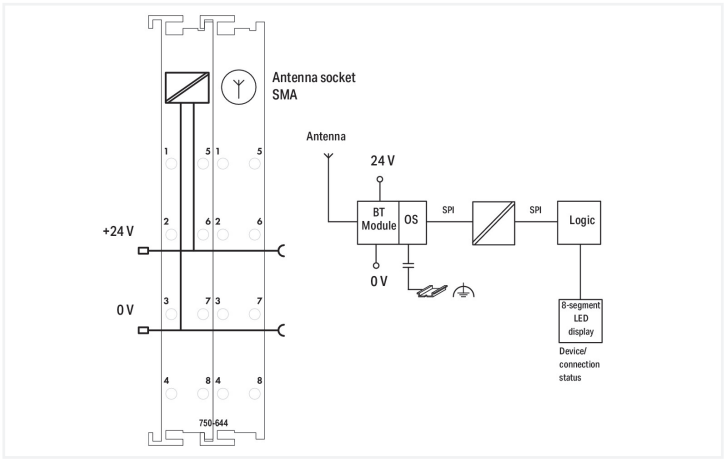

Color: light gray

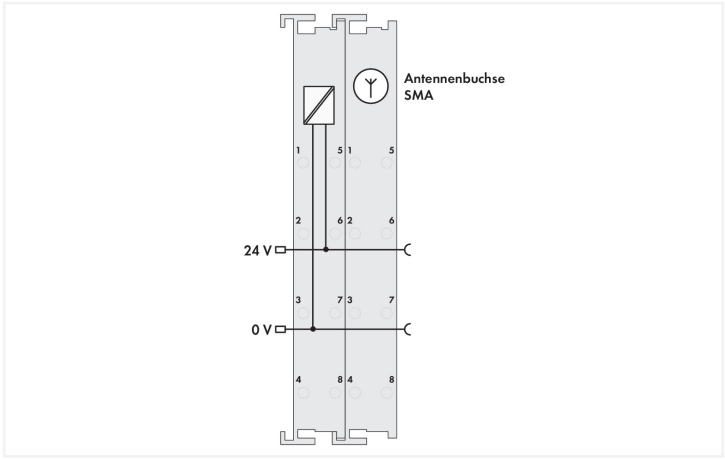

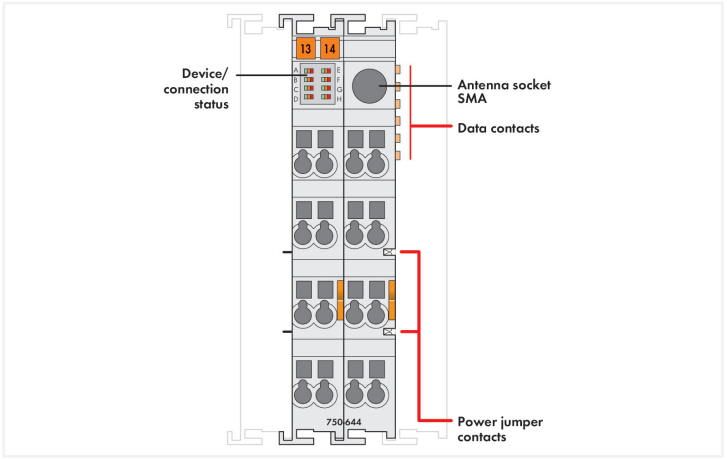

The 750-644 I/O Module enables wireless exchange of process data with up to seven other devices using Bluetooth® 2.0 radio technology. Interoperability with Bluetooth® devices is made non-proprietary via PAN and SPP Bluetooth® profiles. A special profile for time-critical applications is also available.

Reliable connections over distances of up to 1000 m are possible using the external WAGO 758-912 Antenna.

The module's extended diagnostic functions include cyclic and acyclic state information. For quick on-site diagnostics, main information on operational status and radio connection is also displayed via eight LEDs.

The I/O module can be operated with all standard fieldbus couplers/controllers within the WAGO I/O System 750. Module configuration is performed locally via WAGO-I/O-CHECK.

Technical data

Device-specific	Operating modes: Communication mode with ad-hoc profile for high connectivity and real-time profile for time-sensitive applications, as well as configuration mode
Radio technology	*Bluetooth*® 2.0 + EDR *Bluetooth*®
Frequency band	License-free, ISM band, 2402 … 2480 MHz
Topology	Piconet (1 master, max. 7 slaves)
Coexistence	AFH and adaptive transmission power
Transmission range	1000 m (max.) in an open space, 100 m in buildings (using an external WAGO Antenna, Item No. 758-912)
Current consumption, typ.	8 mA (Bluetooth®); max. 35 mA
Receiver sensitivity	-94 dBm
Profiles	SPP, PAN
Data width	12, 24, 48 bytes configurable; incl. 1 byte control/status
Supply voltage	*Bluetooth*®: 24 VDC, via power jumper contacts

Technical data

Advanced diagnostics	via visual indicator and process image: device status, connection status (radio connection quality, signal strength, interference), only via process image: time monitoring
Supply voltage (system)	5 VDC; via data contacts
Current consumption (5 V system supply)	20 mA
Supply voltage (field)	24 VDC; via power jumper contacts (power supply via blade contact; transmission (field side supply voltage only) via spring contact)
Isolation	500 V antenna/system
Number of incoming power jumper contacts	2
Number of outgoing power jumper contacts	2

Connection data

Connection technology: antenna	1 x SMA socket

Physical data

Width	24 mm / 0.945 inches
Height	72 mm / 2.835 inches
Height from upper-edge of DIN-rail	64.8 mm / 2.551 inches
Depth	100 mm / 3.937 inches

Mechanical data

Mounting type	DIN-35 rail

Material data

Color	light gray
Housing material	Polycarbonate; polyamide 6.6
Fire load	0 MJ
Weight	91 g
Conformity marking	CE

Environmental requirements

Ambient temperature (operation)	0 … +55 °C
Ambient temperature (storage)	-25 … +85 °C
Protection type	IP20
Pollution degree	2 per IEC 61131-2
Operating altitude	without temperature derating: 0 … 2000 m; with temperature derating: 2000 … 5000 m (0.5 K/100 m); 5000 m (max.)
Mounting position	Horizontal left, horizontal right, horizontal top, horizontal bottom, vertical top and vertical bottom
Relative humidity (without condensation)	95 %
Vibration resistance	per IEC 60068-2-6
Shock resistance	15g per IEC 60068-2-27
EMC immunity to interference	per EN 61000-6-2, EN 61131-2
EMC emission of interference	per EN 61000-6-3, EN 61131-2
Exposure to pollutants	per IEC 60068-2-42 and IEC 60068-2-43
Permissible H_2S contaminant concentration at a relative humidity 75 %	10 ppm
Permissible SO_2 contaminant concentration at a relative humidity 75 %	25 ppm

Continued on next page

Commercial data

Product Group	15 (I/O System)
eCl@ss 10.0	27-24-26-08
eCl@ss 9.0	27-24-26-08
PU (SPU)	1 pcs
Packaging type	Box
Country of origin	DE
GTIN	4045454549008
Customs tariff number	85389099990
End of Sale	2018-06-01
End of Production	2018-06-06
End of Delivery	2018-06-16
End of Service and Repair	2020-05-31

Environmental Product Compliance

CAS-No.	7439-92-1 79-94-7 1303-86-2 1317-36-8 693-98-1
REACH Candidate List Substance	2,2',6,6'-tetrabromo-4,4'-isopropylidenediphenol 2-methylimidazole Diboron trioxide Lead Lead monoxide
RoHS Compliance Status	Compliant,With Exemption
RoHS Exemption	6(c) 7(a) 7(c)-I 7(c)-II
SCIP notification number (Austria)	a329ee46-c2db-4d41-b7b5-aad63b335bc4
SCIP notification number (Belgium)	6fff7492-4622-40e1-82db-dad1f9323b44
SCIP notification number (Bulgaria)	63c488d2-935b-4b70-9dc2-3dc203ba3613
SCIP notification number (Czech Republic)	1ef14409-b4f6-4a68-8696-853e7a4924b8
SCIP notification number (Denmark)	b3a41c42-e138-40bd-8327-35ad144f7424
SCIP notification number (Finland)	184cf1ee-91b0-4269-9a6e-81812713f3ca
SCIP notification number (France)	078ae158-60d1-4fbb-b15f-053849989d6e
SCIP notification number (Germany)	81134f99-2d87-441f-be1c-7a210e96a1cd
SCIP notification number (Hungary)	3df40a16-3367-4424-bce9-9c5873104cd9
SCIP notification number (Italy)	0d45a73c-b779-4f03-9120-30438a672d2b
SCIP notification number (Netherlands)	65459e67-f47a-4f6b-b29c-e24daf5d186a
SCIP notification number (Poland)	c40b157f-cf5c-4ff4-9945-28f098b861cf
SCIP notification number (Romania)	fcc46892-f4e3-4812-8738-0d87f16a1992
SCIP notification number (Sweden)	43e6a253-f68a-43d6-873e-0dcd68701118

Approvals / Certificates

Declarations of conformity and manufacturer's declarations

Approval	Standard	Certificate Name
EU-Declaration of Conformity WAGO GmbH & Co. KG	-	-

Approvals for hazardous areas

Approval	Standard	Certificate Name
UL Underwriters Laboratories Inc. (HAZARDOUS LOCATIONS)	UL 121201	E198726

 Continued on next page

Downloads

Environmental Product Compliance

Compliance Search	
Environmental Product Compliance 750-644	

Documentation

Manual			
Product Manual Bluetooth® RF Transceiver	V 2.0.0	pdf 8930.72 KB	

Quick-Start Guide			
Quick Start Bluetooth® RF Transceiver 750-644	V 1.0.1	pdf 1159.59 KB	

System Description		
750/753 Series I/O-System – General Product Information		pdf 953.35 KB
Overview on WAGO-I/O-SYSTEM 750 approvals		pdf 770.48 KB
Radio Technology – General Product Information		pdf 493.44 KB

Application Notes

Application Note CoDeSys 2.3		
Aufbau eines Bluetooth® Funknetzwerkes mittels 750-644 (a304001)	1.0.0 17.04.2013	zip 446.42 KB
Bluetooth-Signalübertragung mit 750-644 (a304000)	1.0.0 20.02.2017	zip 1647.43 KB

CAD/CAE-Data

CAD data	
2D/3D Models 750-644	

CAE data	
EPLAN Data Portal 750-644	
WSCAD Universe 750-644	
ZUKEN Portal 750-644	

 Continued on next page

Device Files

Device Driver

WAGO USB Service Kabel Treiber / Serie 750 und 857	6.5.3.0 10.09.2014	zip 4721.96 KB	

Libraries

e!COCKPIT libraries

e!COCKPIT Library Description WagoApp-Bluetooth	1.6.1.0 29.09.2023	pdf 1114.86 KB	

Library

Parametrierung Bluetoothklemme 750-644	1.0.1 27.07.2011	zip 961.95 KB	

1 Compatible Products

1.1 Optional Accessories

1.1.1 Antenna

1.1.1.1 Antenna



Item No.: 758-912
Magnetic foot antenna, WLAN/Bluetooth® 2.4 GHz; External antenna

1.1.2 DIN-rail

1.1.2.1 Mounting accessories



Item No.: 210-196
Aluminum carrier rail; 35 x 8.2 mm; 1.6 mm thick; 2 m long; unslotted; similar to EN 60715; silver-colored



Item No.: 210-198
Copper carrier rail; 35 x 15 mm; 2.3 mm thick; 2 m long; unslotted; according to EN 60715; copper-colored



Item No.: 210-508
Steel carrier rail; 35 x 15 mm; 1.5 mm thick; 2 m long; slotted; galvanized; similar to EN 60715; silver-colored



Item No.: 210-197
Steel carrier rail; 35 x 15 mm; 1.5 mm thick; 2 m long; slotted; similar to EN 60715; silver-colored



Item No.: 210-506
Steel carrier rail; 35 x 15 mm; 1.5 mm thick; 2 m long; unslotted; galvanized; similar to EN 60715; silver-colored



Item No.: 210-114
Steel carrier rail; 35 x 15 mm; 1.5 mm thick; 2 m long; unslotted; similar to EN 60715; silver-colored



Item No.: 210-118
Steel carrier rail; 35 x 15 mm; 2.3 mm thick; 2 m long; unslotted; according to EN 60715; silver-colored



Item No.: 210-115
Steel carrier rail; 35 x 7.5 mm; 1 mm thick; 2 m long; slotted; according to EN 60715; "Hole width 18 mm; silver-colored



Item No.: 210-112
Steel carrier rail; 35 x 7.5 mm; 1 mm thick; 2 m long; slotted; according to EN 60715; "Hole width 25 mm; silver-colored



Item No.: 210-504
Steel carrier rail; 35 x 7.5 mm; 1 mm thick; 2 m long; slotted; galvanized; according to EN 60715; silver-colored



Item No.: 210-113
Steel carrier rail; 35 x 7.5 mm; 1 mm thick; 2 m long; unslotted; according to EN 60715; silver-colored



Item No.: 210-505
Steel carrier rail; 35 x 7.5 mm; 1 mm thick; 2 m long; unslotted; galvanized; according to EN 60715; silver-colored

Continued on next page

1.1.3 Marking

1.1.3.1 Group marker carrier



Item No.: 750-107
Group marker carrier

1.1.3.2 Marker



Item No.: 2009-145/000-006
Mini-WSB Inline; for Smart Printer; 1700 pieces on roll; stretchable 5 - 5.2 mm; plain; snap-on type; blue



Item No.: 2009-145/000-007
Mini-WSB Inline; for Smart Printer; 1700 pieces on roll; stretchable 5 - 5.2 mm; plain; snap-on type; gray



Item No.: 2009-145/000-023
Mini-WSB Inline; for Smart Printer; 1700 pieces on roll; stretchable 5 - 5.2 mm; plain; snap-on type; green



Item No.: 2009-145/000-012
Mini-WSB Inline; for Smart Printer; 1700 pieces on roll; stretchable 5 - 5.2 mm; plain; snap-on type; orange



Item No.: 2009-145/000-005
Mini-WSB Inline; for Smart Printer; 1700 pieces on roll; stretchable 5 - 5.2 mm; plain; snap-on type; red



Item No.: 2009-145/000-024
Mini-WSB Inline; for Smart Printer; 1700 pieces on roll; stretchable 5 - 5.2 mm; plain; snap-on type; violet



Item No.: 2009-145
Mini-WSB Inline; for Smart Printer; 1700 pieces on roll; stretchable 5 - 5.2 mm; plain; snap-on type; white



Item No.: 2009-145/000-002
Mini-WSB Inline; for Smart Printer; 1700 pieces on roll; stretchable 5 - 5.2 mm; plain; snap-on type; yellow



Item No.: 248-501/000-006
Mini-WSB marking card; as card; not stretchable; plain; snap-on type; blue



Item No.: 248-501/000-007
Mini-WSB marking card; as card; not stretchable; plain; snap-on type; gray



Item No.: 248-501/000-023
Mini-WSB marking card; as card; not stretchable; plain; snap-on type; green



Item No.: 248-501/000-017
Mini-WSB marking card; as card; not stretchable; plain; snap-on type; light green



Item No.: 248-501/000-012
Mini-WSB marking card; as card; not stretchable; plain; snap-on type; orange



Item No.: 248-501/000-005
Mini-WSB marking card; as card; not stretchable; plain; snap-on type; red



Item No.: 248-501/000-024
Mini-WSB marking card; as card; not stretchable; plain; snap-on type; violet



Item No.: 248-501
Mini-WSB marking card; as card; not stretchable; plain; snap-on type; white



Item No.: 248-501/000-002
Mini-WSB marking card; as card; not stretchable; plain; snap-on type; yellow

1.1.3.3 Marker carrier



Item No.: 750-103
Group marker carrier

1.1.4 Shield termination

1.1.4.1 Shield clamping saddles



Item No.: 790-108
Shield clamping saddle; 11 mm wide; diameter of compatible conductor; 3 … 8 mm



Item No.: 790-208
Shield clamping saddle; 12.4 mm wide; 3 … 8 mm



Item No.: 790-116
Shield clamping saddle; 19 mm wide; diameter of compatible conductor; 7 … 16 mm



Item No.: 790-216
Shield clamping saddle; 21.8 mm wide; 6 … 16 mm



Item No.: 790-124
Shield clamping saddle; 27 mm wide; diameter of compatible conductor; 6 … 24 mm



Item No.: 790-220
Shield clamping saddle; 30 mm wide; 6 … 20 mm



Item No.: 790-140
Shield clamping saddle; diameter of compatible conductor

 Continued on next page

1.1.5 Supply module

1.1.5.1 Supply module



Item No.: 750-612
Power Supply; 0 … 230 V AC/DC



Item No.: 750-602
Power Supply; 24 VDC



Item No.: 750-601
Power Supply; 24 VDC; fuse holder



Item No.: 750-610
Power Supply; 24 VDC; fuse holder; Diagnostics

1.1.6 System enclosure

1.1.6.1 System enclosure



Item No.: 850-825
IP65 enclosure; Aluminium (RAL 7032); WxHxD (160x100x160 mm); 9 x M12, 4 x M20



Item No.: 850-826
IP65 enclosure; Aluminium (RAL 7032); WxHxD (240x100x160 mm); 4 x M20, 4 x M16, 14 x M12 cable grip



Item No.: 850-827
IP65 enclosure; Aluminium (RAL 7032); WxHxD (320x100x160 mm); 4 x M20, 8 x M16, 17 x M12 cable grip



Item No.: 850-828
IP65 enclosure; Aluminium (RAL 7032); WxHxD (480x100x160 mm); 4 x M20, 10 x M16, 35 x M12 cable grip



Item No.: 850-826/002-000
IP65 enclosure; Aluminium (RAL 7035); WxHxD (240x100x160 mm); 4 x M20, 4 x M16, 14 x M12 cable grip



Item No.: 850-827/002-000
IP65 enclosure; Aluminium (RAL 7035); WxHxD (320x100x160 mm); 4 x M20, 8 x M16, 17 x M12 cable grip



Item No.: 850-828/002-000
IP65 enclosure; Aluminium (RAL 7035); WxHxD (480x100x160 mm); 4 x M20, 10 x M16, 35 x M12 cable grip



Item No.: 850-834
IP65 enclosure; Polyester (RAL 7032); WxHxD (164x100x164 mm); 9 x M12, 4 x M20



Item No.: 850-835
IP65 enclosure; Polyester (RAL 7032); WxHxD (244x100x164 mm); 4 x M20, 4 x M16, 14 x M12 cable grip



Item No.: 850-836
IP65 enclosure; Polyester (RAL 7032); WxHxD (324x100x164 mm); 4 x M20, 8 x M16, 17 x M12 cable grip



Item No.: 850-814/002-000
IP65 enclosure; Sheet steel (RAL 7035); WxHxD (200x120x200 mm); without flange plate



Item No.: 850-815/002-000
IP65 enclosure; Sheet steel (RAL 7035); WxHxD (300x120x200 mm); without flange plate



Item No.: 850-816/002-000
IP65 enclosure; Sheet steel (RAL 7035); WxHxD (400x120x200 mm); without flange plate



Item No.: 850-817/002-000
IP65 enclosure; Sheet steel (RAL 7035); WxHxD (600x120x200 mm); without flange plate