Data sheet | Item number: 787-890

RS-232 communication cable; Length 1.8 m

www.wago.com/787-890

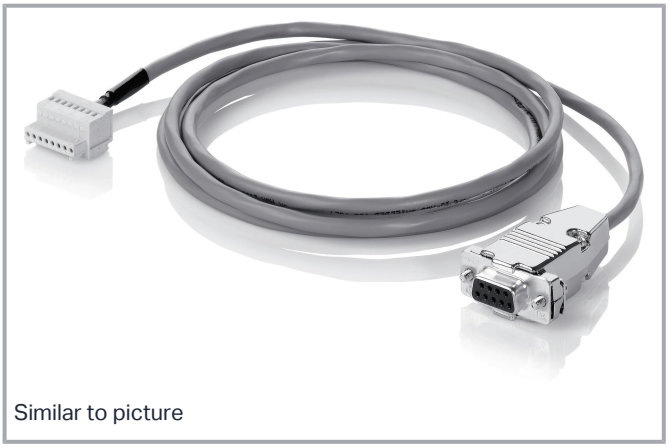

Similar to picture

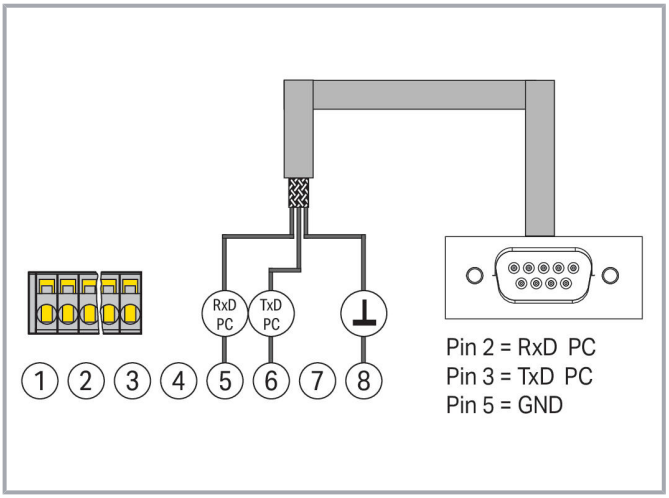

Item description

WAGO's communication cable is used for configuration and visualization via PC or controller.

It is suitable for all 787-8xx devices equipped with an RS-232 serial interface.

Download the corresponding PC software for all 787 Series devices at www.wago.com

Function blocks for communication with the WAGO I/O System 750 and other control systems are also available.

Data

Notes

Note	The communication cable is not electrically isolated.

Technical data

Signaling and communication

Signaling	1 x RS-232 cable
Communications	RS-232 serial interface

Subject to changes. Please also observe the further product documentation!

WAGO GmbH & Co. KG
Hansastr. 27
32423 Minden
Phone: +49571 887-0 | Fax: +49571 887-169
Email: info.de@wago.com | Web: www.wago.com

Do you have any questions about our products?
We are always happy to take your call at +49 (571) 887-44222.

Safety and protection

Protection type	IP20; per EN 60529

Connection data

Connection type 1	Module side (787-8xx)
Connection technology	1 x 8-pole female connector (733-108) with strain relief
Connection type 2	PC/controller side
Connection technology 2	1 x 9 pole D-sub socket
Cable type	3 x 0.34 mm²; shielded

Physical data

Cable length	1.8 m

Material data

Weight	113 g

Environmental requirements

Ambient temperature (operation)	-10 … +70 °C

Commercial data

Product Group	6 (INTERFACE ELECTRONIC)
eCl@ss 10.0	27-06-18-90
eCl@ss 9.0	27-06-03-11
ETIM 9.0	EC001408
ETIM 8.0	EC001408
ECCN	NO DATA
PU (SPU)	1 pcs
Packaging type	box
Country of origin	DE
GTIN	4045454909741
Customs tariff number	85444290900

Environmental Product Compliance

RoHS Compliance Status	Compliant,No Exemption

Subject to changes. Please also observe the further product documentation!

WAGO GmbH & Co. KG
Hansastr. 27
32423 Minden
Phone: +49571 887-0 | Fax: +49571 887-169
Email: info.de@wago.com | Web: www.wago.com

Do you have any questions about our products?
We are always happy to take your call at +49 (571) 887-44222.

Optional accessories

Cables and pluggable connectors

Connecting cable



Item no.: 761-9005
USB adapter; with 1m connection cable

www.wago.com/761-9005

Downloads

Documentation

Bid Text

787-890 X81 - Datei	Dec 6, 2019	xml 3.8 kB	Download
787-890 docx - Datei	Jan 20, 2015	docx 15.9 kB	Download
787-890 pdf - Datei	Jan 20, 2015	pdf 68.9 kB	Download
787-890 doc - Datei	Jan 20, 2015	doc 25.6 kB	Download

Additional Information

Disposal and Recycling Electrical and electronic equipment, Batteries, Packaging	V 1.1.0 Aug 18, 2022	pdf 2.2 MB	Download

CAD/CAE-Data

CAE data

WSCAD Universe 787-890	URL	Download

Environmental Product Compliance

Compliance Search

Environmental Product Compliance 787-890 RS-232 communication cable; Length 1.8 m	URL	Download

Subject to changes. Please also observe the further product documentation!

WAGO GmbH & Co. KG
Hansastr. 27
32423 Minden
Phone: +49571 887-0 | Fax: +49571 887-169
Email: info.de@wago.com | Web: www.wago.com

Do you have any questions about our products?
We are always happy to take your call at +49 (571) 887-44222.

Installation Notes

Subject to changes. Please also observe the further product documentation!

WAGO GmbH & Co. KG
Hansastr. 27
32423 Minden
Phone: +49571 887-0 | Fax: +49571 887-169
Email: info.de@wago.com | Web: www.wago.com

Do you have any questions about our products?
We are always happy to take your call at +49 (571) 887-44222.