Data sheet | Item number: 789-811

Manual operation module; 4 analog outputs; 1,50 mm²

www.wago.com/789-811



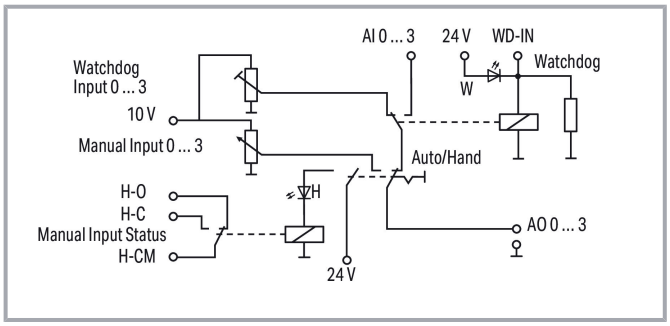

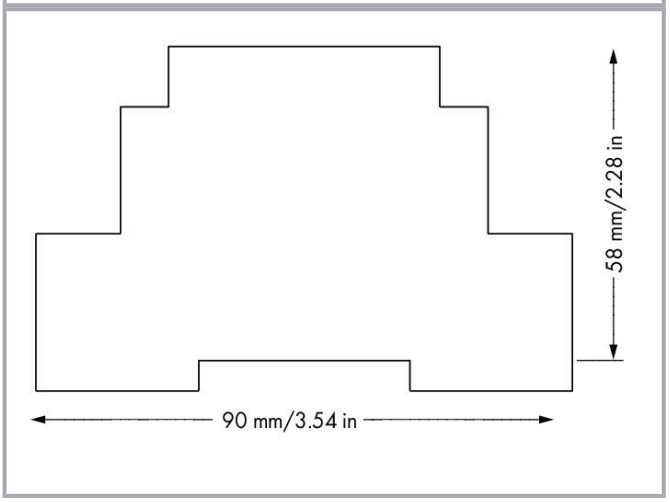

Item description

Short description:

WAGO's analog manually operated module (789-811) monitors 0 … 3 analog inputs. Depending on both manual/automatic switch and watchdog input, 0 to 10 V set voltage is transmitted to the output.

Subject to changes. Please also observe the further product documentation!

WAGO GmbH & Co. KG
Hansastr. 27
32423 Minden
Phone: +49571 887-0 | Fax: +49571 887-169
Email: info.de@wago.com | Web: www.wago.com

Do you have any questions about our products?
We are always happy to take your call at +49 (571) 887-44222.

Data

Electrical data

Nominal operating voltage	DC 24 V
Operating voltage range	±20 %
Inputs	No. 1 / 10: 24 V; power supply No. 2: GND No. 3 / 4 / 5 / 6: AI-0 … 3; Input 0 … 3; 0 … 10 V / 20 mA (max.) No.11: WD-IN; Watchdog input; 24 V / 20 mA (max.)
Outputs	No. 7: H-C; Manual operation; “closed” No. 8: H-CM; Manual operation; “common” No. 9: H-O; Manual operation; “open” No. 12 / 15 / 18 / 21: DO-0 … 3-NC; Channel 0 … 3; Break contact; 250 VAC / 30 VDC; 8 A No. 13 / 16 / 19 / 22: DO-0 … 3-CM; Channel 0 … 3; Common No. 14 / 17 / 20 / 23: DO-0 … 3-NO; Channel 0 … 3; Make contact; 250 VAC / 30 VDC; 8 A

Connection data

Connection type 1	Input
Connection technology	CAGE CLAMP®
WAGO connector	WAGO 734 Series
Solid conductor	0.08 … 1.5 mm² / 28 … 14 AWG
Fine-stranded conductor	0.08 … 1.5 mm² / 28 … 14 AWG
Strip length	7 mm / 0.28 inches
Connection type 2	Output
Connection technology 2	CAGE CLAMP®
WAGO connector 2	WAGO 231 Series
Solid conductor 2	0.08 … 2.5 mm² / 28 … 12 AWG
Fine-stranded conductor 2	0.08 … 2.5 mm² / 28 … 12 AWG
Strip length 2	8 … 9 mm / 0.31 … 0.35 inches

Physical data

Width	106 mm / 4.173 inches
Height	90 mm / 3.543 inches
Depth from upper-edge of DIN-rail	58 mm / 2.283 inches

Subject to changes. Please also observe the further product documentation!

WAGO GmbH & Co. KG
Hansastr. 27
32423 Minden
Phone: +49571 887-0 | Fax: +49571 887-169
Email: info.de@wago.com | Web: www.wago.com

Do you have any questions about our products?
We are always happy to take your call at +49 (571) 887-44222.

Mechanical data

Mounting type	DIN-35 rail
Housing design	DIN-rail-mount enclosure

Material data

Fire load	0.458 MJ
Weight	199.5 g

Environmental requirements

Ambient temperature (operation)	0 … +50 °C
Ambient temperature (storage)	-25 … +70 °C

Commercial data

Product Group	6 (INTERFACE ELECTRONIC)
eCl@ss 10.0	27-37-12-16
eCl@ss 9.0	27-37-12-16
ETIM 9.0	EC000225
ETIM 8.0	EC000225
Recupel Type	
ECCN	NO DATA
PU (SPU)	1 pcs
Packaging type	box
Country of origin	DE
GTIN	4050821233800
Customs tariff number	85389091890

Environmental Product Compliance

CAS-No.	1303-86-2 1317-36-8 7439-92-1
REACH Candidate List Substance	Diboron trioxide Lead Lead monoxide
RoHS Compliance Status	Compliant,With Exemption
RoHS Exemption	7(c)-I
SCIP notification number (Austria)	d2aa60b9-6f1c-454c-86e0-91c6ee9239ab

Subject to changes. Please also observe the further product documentation!

WAGO GmbH & Co. KG
Hansastr. 27
32423 Minden
Phone: +49571 887-0 | Fax: +49571 887-169
Email: info.de@wago.com | Web: www.wago.com

Do you have any questions about our products?
We are always happy to take your call at +49 (571) 887-44222.

SCIP notification number (Belgium)	3eae0100-20da-4ac4-aa4b-54986ee16403
SCIP notification number (Bulgaria)	dafd93c3-098a-4807-b759-e7d545b3c801
SCIP notification number (Czech Republic)	5d7907ec-0372-40d8-9846-5109f9847eaf
SCIP notification number (Denmark)	624662d8-2166-478f-ba9c-434f17e4a49e
SCIP notification number (Finland)	ffc24c65-00e2-40d1-8e4d-2aded777141c
SCIP notification number (France)	5b28d66a-a56b-496b-8983-6de5f9e1c0b3
SCIP notification number (Germany)	3ea91932-d981-4641-847a-dcb152d62d08
SCIP notification number (Hungary)	a733c833-2b00-4185-be20-3252b8080acd
SCIP notification number (Italy)	da7ee25a-d4da-4512-9441-aa3318fb1235
SCIP notification number (Netherlands)	eb7e7290-8410-4cb5-9ad3-951124d201c0
SCIP notification number (Poland)	9c0079c2-097c-424b-a6b6-4beb79df994f
SCIP notification number (Romania)	7dc52fc8-5119-4840-b829-91ffb611a094
SCIP notification number (Sweden)	a3324302-bb0d-4e40-85b5-48fbcf721a8c

Optional accessories

Ferrule

Ferrule

	Item no.: 216-203 Ferrule; Sleeve for 1 mm² / AWG 18; insulated; electro-tin plated; red	www.wago.com/216-203
	Item no.: 216-202 Ferrule; Sleeve for 0.75 mm² / 18 AWG; insulated; electro-tin plated; gray	www.wago.com/216-202
	Item no.: 216-204 Ferrule; Sleeve for 1.5 mm² / AWG 16; insulated; electro-tin plated; black	www.wago.com/216-204
	Item no.: 216-201 Ferrule; Sleeve for 0.5 mm² / 20 AWG; insulated; electro-tin plated; white	www.wago.com/216-201
	Item no.: 216-241 Ferrule; Sleeve for 0.5 mm² / 20 AWG; insulated; electro-tin plated; electrolytic copper; gastight crimped; acc. to DIN 46228, Part 4/09.90; white	www.wago.com/216-241
	Item no.: 216-242 Ferrule; Sleeve for 0.75 mm² / 18 AWG; insulated; electro-tin plated; electrolytic copper; gastight crimped; acc. to DIN 46228, Part 4/09.90; gray	www.wago.com/216-242
	Item no.: 216-243 Ferrule; Sleeve for 1 mm² / AWG 18; insulated; electro-tin plated; electrolytic copper; gastight crimped; acc. to DIN 46228, Part 4/09.90; red	www.wago.com/216-243
	Item no.: 216-244 Ferrule; Sleeve for 1.5 mm² / AWG 16; insulated; electro-tin plated; electrolytic copper; gastight crimped; acc. to DIN 46228, Part 4/09.90; black	www.wago.com/216-244
	Item no.: 216-263 Ferrule; Sleeve for 1 mm² / AWG 18; insulated; electro-tin plated; electrolytic copper; gastight crimped; acc. to DIN 46228, Part 4/09.90; red	www.wago.com/216-263
	Item no.: 216-264	

Subject to changes. Please also observe the further product documentation!

WAGO GmbH & Co. KG
Hansastr. 27
32423 Minden
Phone: +49571 887-0 | Fax: +49571 887-169
Email: info.de@wago.com | Web: www.wago.com

Do you have any questions about our products?
We are always happy to take your call at +49 (571) 887-44222.

	Ferrule; Sleeve for 1.5 mm² / AWG 16; insulated; electro-tin plated; electrolytic copper; gastight crimped; acc. to DIN 46228, Part 4/09.90; black	www.wago.com/216-264
	Item no.: 216-262 Ferrule; Sleeve for 0.75 mm² / 18 AWG; insulated; electro-tin plated; electrolytic copper; gastight crimped; acc. to DIN 46228, Part 4/09.90; gray	www.wago.com/216-262
	Item no.: 216-301 Ferrule; Sleeve for 0.25 mm² / AWG 24; insulated; electro-tin plated; yellow	www.wago.com/216-301
	Item no.: 216-302 Ferrule; Sleeve for 0.34 mm² / 22 AWG; insulated; electro-tin plated; light turquoise	www.wago.com/216-302

Tool

Operating tool

	**Item no.: 210-719** Operating tool; Blade: 2.5 x 0.4 mm; with a partially insulated shaft	www.wago.com/210-719
	**Item no.: 210-720** Operating tool; Blade: 3.5 x 0.5 mm; with a partially insulated shaft; multicoloured	www.wago.com/210-720

Downloads

Documentation

Bid Text

789-811 X81 - Datei	Feb 19, 2019	xml 4.3 kB	Download
789-811 doc - Datei	Feb 11, 2015	doc 26.1 kB	Download

Instruction Leaflet

		pdf 1.3 MB	Download

Additional Information

Disposal and Recycling Electrical and electronic equipment, Batteries, Packaging	V 1.1.0 Aug 18, 2022	pdf 2.2 MB	Download

CAD/CAE-Data

CAE data

Subject to changes. Please also observe the further product documentation!

WAGO GmbH & Co. KG
Hansastr. 27
32423 Minden
Phone: +49571 887-0 | Fax: +49571 887-169
Email: info.de@wago.com | Web: www.wago.com

Do you have any questions about our products?
We are always happy to take your call at +49 (571) 887-44222.

EPLAN Data Portal 789-811	URL	Download
WSCAD Universe 789-811	URL	Download

Environmental Product Compliance

Compliance Search

Environmental Product Compliance 789-811 Manual operation module; 4 analog outputs; 1,50 mm²	URL	Download

Installation Notes