Data sheet | Item number: 850-835

IP65 enclosure; Polyester (RAL 7032); WxHxD (244x100x164 mm); 4 x M20, 4 x M16, 14 x M12 cable grip

www.wago.com/850-835



Picture differs from the item.

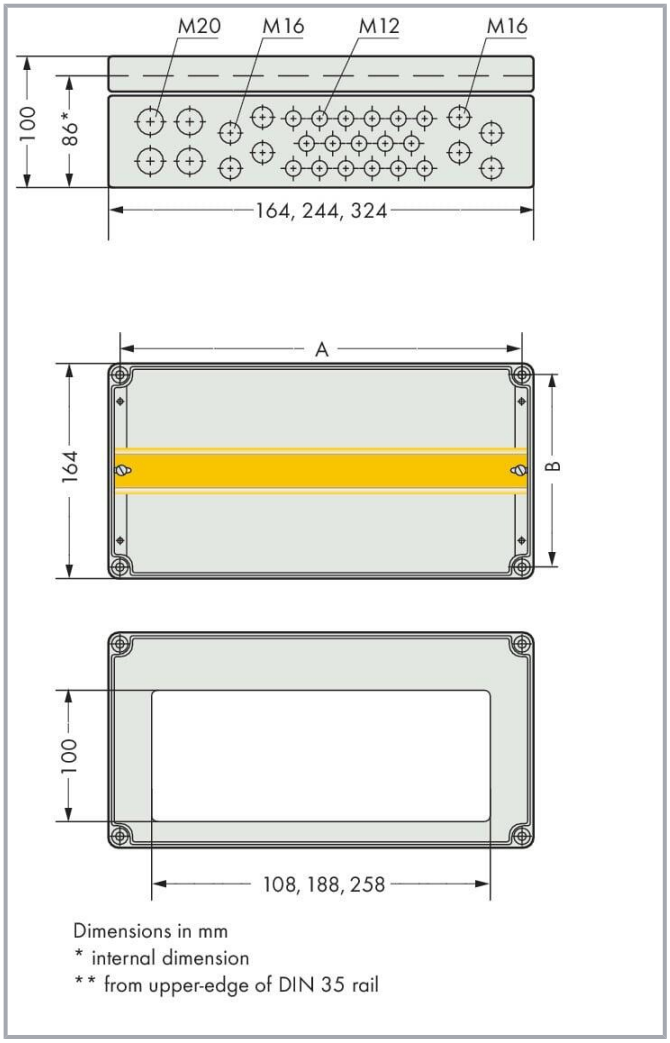

Item description

Included:

- Polyester enclosure, glass-fiber-reinforced, halogen-free, as V0 version (self-extinguishing)
- Polyamide cover screws, captive
- Inspection glass, incl. attachment panel for customer marking (marking not included in scope of supply)
- Mounting holes (4 mounting channels located outside the sealed enclosure)
-

Subject to changes. Please also observe the further product documentation!

WAGO GmbH & Co. KG
Hansastr. 27
32423 Minden
Phone: +49571 887-0 | Fax: +49571 887-169
Email: info.de@wago.com | Web: www.wago.com

Do you have any questions about our products?
We are always happy to take your call at +49 (571) 887-44222.

Metric cable grips (polyamide PA 6), **incl. filler plugs**
M12 cable grip, cable diameter 3 … 6 mm
M16 cable grip, cable diameter 5 … 9 mm
M20 cable grip, cable diameter 9 … 13 mm

- 1 x DIN-35/7.5 rail
- Oil and petroleum-resistant neoprene round cord seal
- Pebble gray, RAL 7032

The “number of I/O modules” also takes fieldbus couplers and bus end modules into account.

This applies to 12 mm wide I/O modules. 24 mm wide I/O modules count as two I/O modules.

Data

Technical data

Number of I/O modules	11

Physical data

Width	244 mm / 9.606 inches
Height	100 mm / 3.937 inches
Depth	164 mm / 6.457 inches
Panel cutout (W x H)	(222 x 142) mm

Mechanical data

Cable bushings (number)	14
Cable bushings (type)	M12 (3 … 6 mm cable diameter)
Cable bushings (number) (2)	4
Cable bushings (type) (2)	M16 (5 … 9 mm cable diameter)
Cable bushings (number) (3)	4
Cable bushings (type) (3)	M20 (9 … 13 mm cable diameter)

Material data

Weight	1859.8 g

Environmental requirements

Protection type	IP65

Subject to changes. Please also observe the further product documentation!

WAGO GmbH & Co. KG
Hansastr. 27
32423 Minden
Phone: +49571 887-0 | Fax: +49571 887-169
Email: info.de@wago.com | Web: www.wago.com

Do you have any questions about our products?
We are always happy to take your call at +49 (571) 887-44222.

Commercial data

Product Group	15 (I/O System)
eCl@ss 10.0	27-14-24-18
eCl@ss 9.0	27-14-24-18
ETIM 9.0	EC000262
ETIM 8.0	EC000262
ECCN	NO DATA
PU (SPU)	1 pcs
Packaging type	box
Country of origin	DE
GTIN	4017332818438
Customs tariff number	85381000000

Environmental Product Compliance

RoHS Compliance Status	Compliant,No Exemption

Optional accessories

Mounting

Mounting accessories



Item no.: 850-903
Pole mounting; 4 clamping brackets; 2 molded rails and 4 clamping profiles in sheet steel; 2 tightening straps in stainless steel

www.wago.com/850-903

Downloads

Documentation

Bid Text

850-835 X81 - Datei	Feb 19, 2019	xml 4.6 kB	Download
850-835 doc - Datei	Oct 9, 2017	doc 32.8 kB	Download

System Description

IP65 System Housing		pdf 155.2 kB	Download

Subject to changes. Please also observe the further product documentation!

WAGO GmbH & Co. KG
Hansastr. 27
32423 Minden
Phone: +49571 887-0 | Fax: +49571 887-169
Email: info.de@wago.com | Web: www.wago.com

Do you have any questions about our products?
We are always happy to take your call at +49 (571) 887-44222.

CAD/CAE-Data

CAE data

EPLAN Data Portal 850-835	URL	Download
WSCAD Universe 850-835	URL	Download

Environmental Product Compliance

Compliance Search

Environmental Product Compliance 850-835 IP65 enclosure; Polyester (RAL 7032); WxHxD (244x100x164 mm); 4 x M20, 4 x M16, 14 x M12 cable grip	URL	Download

Installation Notes

Subject to changes. Please also observe the further product documentation!

WAGO GmbH & Co. KG
Hansastr. 27
32423 Minden
Phone: +49571 887-0 | Fax: +49571 887-169
Email: info.de@wago.com | Web: www.wago.com

Do you have any questions about our products?
We are always happy to take your call at +49 (571) 887-44222.