# DRR370110L

**Weidmüller Interface GmbH & Co. KG**
Klingenbergstraße 26
D-32758 Detmold
Germany

www.weidmueller.com

## Product image



Similar to illustration

Individual relays within the D-SERIES DRR
- 3 CO contacts
- Optional AC or DC coils
- With integrated status LED

### General ordering data

| | |
|---|---|
| Version | D-SERIES DRR, Relay, Number of contacts: 3, CO contact AgCdO, Rated control voltage: 110 V DC, Continuous current: 10 A, Plug-in connection, Test button available: No |
| Order No. | 1133440000 |
| Type | DRR370110L |
| GTIN (EAN) | 4032248952793 |
| Qty. | 10 pc(s). |
| Delivery status | This article will no longer be available in the future. |
| Available until | 2021-04-30 |
| Alternative product | 2765090000 |

Creation date January 21, 2022 1:50:30 AM CET

# DRR370110L

**Weidmüller Interface GmbH & Co. KG**
Klingenbergstraße 26
D-32758 Detmold
Germany

www.weidmueller.com

## Technical data

### Dimensions and weights

| | | | |
|---|---|---|---|
| Depth | 66 mm | Depth (inches) | 2.598 inch |
| Height | 34.5 mm | Height (inches) | 1.358 inch |
| Width | 34.5 mm | Width (inches) | 1.358 inch |
| Net weight | 75 g | | |

### Temperatures

| | | | |
|---|---|---|---|
| Storage temperature | -25 °C...55 °C | Operating temperature | -25 °C...55 °C |
| Humidity | 5...85 % rel. humidity, no condensation | | |

### Environmental Product Compliance

| | |
|---|---|
| REACH SVHC | Lead 7439-92-1 |

### Rated data UL

| | |
|---|---|
| Certificate No. (cURus) | E312083 |

### Control side

| | | | |
|---|---|---|---|
| Rated control voltage | 110 V DC | Rated current DC | 15 mA |
| Power rating | 1.5 W | Pull-in/drop-out voltage, typ. | 82.5 V / 16.5 V DC |
| Coil resistance | 7360 Ω ± 10 % | Status indicator | Green LED |

### Load side

| | | | |
|---|---|---|---|
| Rated switching voltage | 250 V AC | Continuous current | 10 A |
| Max. switching frequency at rated load | 0.1 Hz | Min. switching power | 100 mA @ 12 V |
| Inrush current | 50 A / 50 ms | AC switching capacity (resistive), max. | 2500 VA |
| DC switching capacity (resistive), max. | 240 W @ 24 V | Switch-on delay | ≤ 30 ms |
| Switch-off delay | ≤ 20 ms | Contact type | 3 CO contact (AgCdO) |
| Mechanical service life | 10 x $10^6$ switching cycles | | |

### General data

| | | |
|---|---|---|
| Test button available | No | |
| Mechanical switch position indicator | Yes | |
| Colour | Transparent | |
| UL94 flammability rating component | Component | Relay status indicator |
| | UL94 flammability rating | HB |
| | Component | Relay baseplate |
| | UL94 flammability rating | V-0 |
| | Component | Relay cover |
| | UL94 flammability rating | V-2 |

# DRR370110L

**Weidmüller Interface GmbH & Co. KG**
Klingenbergstraße 26
D-32758 Detmold
Germany

www.weidmueller.com

## Technical data

### Insulation coordination

| | | | |
|---|---|---|---|
| Rated voltage | 250 V | Pollution severity | 3 |
| Surge voltage category | III | Insulating material group | IIIa |
| Clearance and creepage distances for control side - load side | ≥ 3 mm | Dielectric strength for control side - load side | 2.5 $kV_{eff}$ / 1 Min. |
| Dielectric strength of neighbouring contacts | 1.2 $kV_{eff}$ /1 min. | Dielectric strength of open contact | 1.2 $kV_{eff}$ /1 min. |
| Impulse withstand voltage | 4 kV (1.2/50 µs) | Protection degree | IP20 |

### Further details of approvals / standards

| | | | |
|---|---|---|---|
| Standards | IEC 61810-1, EN 60664-1:2007, EN 61000-6-2:2005, EN 61000-6-4:2007 + A1:2011, UL 508 | Certificate No. (cURus) | E312083 |

### Connection data

| | |
|---|---|
| Wire connection method | Plug-in connection |

### Classifications

| | | | |
|---|---|---|---|
| ETIM 6.0 | EC001437 | ETIM 7.0 | EC001437 |
| ETIM 8.0 | EC001437 | ECLASS 9.0 | 27-37-16-01 |
| ECLASS 9.1 | 27-37-16-01 | ECLASS 10.0 | 27-37-16-01 |
| ECLASS 11.0 | 27-37-16-01 | | |

### Important note

| | |
|---|---|
| Product information | This article uses an exemption named in Annex III of the RoHS Directive 2011/65/EU "8b - Cadmium and cadmium compounds in electrical contacts", which could only be valid until 21.07.2021, depending on the product category. Please check whether you can use this article depending on the place of marketing and the product category concerned. Alternative product with modified contact material: |

### Approvals

| | |
|---|---|
| Approvals | |
| ROHS | Conform |
| UL File Number Search | E312083 |

### Downloads

| | |
|---|---|
| Engineering Data | CAD data – STEP |
| Engineering Data | EPLAN, WSCAD |
| Product Change Notification | Product Change Notification - Deutsch<br>Product Change Notification - English |
| Catalogues | Catalogues in PDF-format |
| Brochures | |

**DRR370110L**

**Weidmüller Interface GmbH & Co. KG**
Klingenbergstraße 26
D-32758 Detmold
Germany

www.weidmueller.com

# Drawings

## Wiring diagram

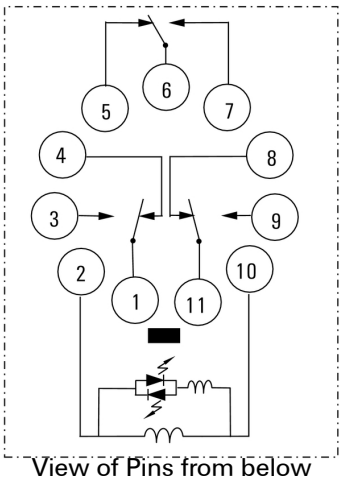


View of Pins from below

## Graph

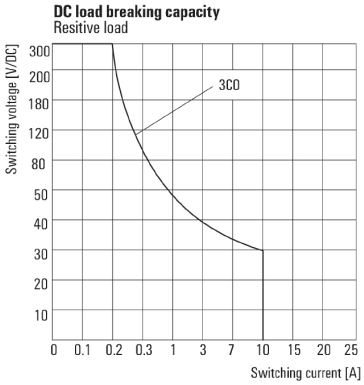


DC load limit curve
Resistive load

## Graph

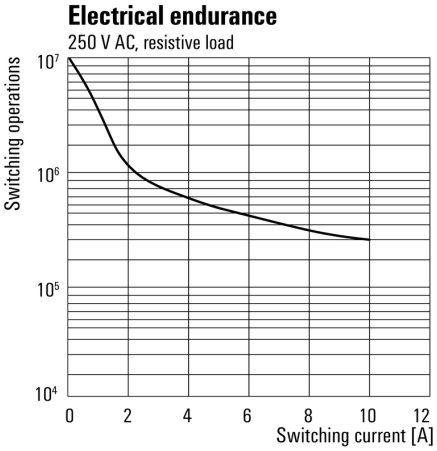


Electrical service life

## Graph

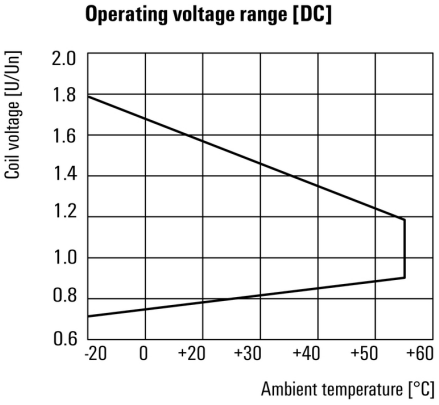


DC operational voltage range

## Dimensional drawing

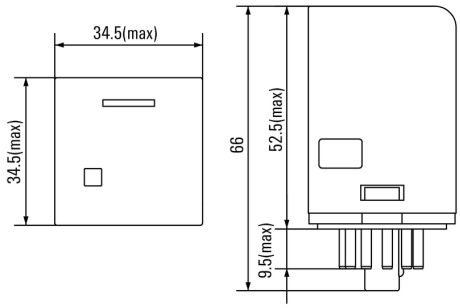

# DRR370110L

**Weidmüller Interface GmbH & Co. KG**
Klingenbergstraße 26
D-32758 Detmold
Germany

www.weidmueller.com

## Accessories

### Blank, adhesive backing



SM is a MultiCard marker for labelling control and signalling devices. The tags are clipped into the carriers or attached by means of the adhesive film already fitted to them. Customised tags can be created with the PrintJet CONNECT or Plotter marking systems.

- Users can quickly produce tags to suit their needs
- No need to stock expensive standard tags
- Highly resistant printing quality when using the PrintJet as a substitute for engraving
- For extreme demands, we recommend the ETO SM protective film
- Holders can be used for the 22-mm or 30-mm-diameter push-buttons from Siemens, ABB, Moeller and Télémécanique

**For custom printing:** Please send us a file of our labeling software M-Print PRO or M-Print PRO Online (without installation) for your labeling specifications.

### General ordering data

| | | |
|---|---|---|
| Type | SM 18/9.5 K MC NE GR | Version |
| Order No. | 1248610000 | SwitchMark, Device markers, 9.5 x 18 mm, grey |
| GTIN (EAN) | 4050118038675 | |
| Qty. | 200 pc(s). | |
| Type | SM 18/9.5 K MC NE WS | Version |
| Order No. | 1248580000 | SwitchMark, Device markers, 9.5 x 18 mm, white |
| GTIN (EAN) | 4050118038965 | |
| Qty. | 200 pc(s). | |
| Type | SM 18/9.5 K MC NE GE | Version |
| Order No. | 1248590000 | SwitchMark, Device markers, 9.5 x 18 mm, Siemens 3 SB, yellow |
| GTIN (EAN) | 4050118038958 | |
| Qty. | 200 pc(s). | |

# DRR370110L

**Weidmüller Interface GmbH & Co. KG**
Klingenbergstraße 26
D-32758 Detmold
Germany

www.weidmueller.com

## Accessories

### Blank



ESG is the tried-and-tested marker in MultiCard format for use on many well-known electrical devices. The result is high-quality device marking with a high-contrast appearance.
Various types are available for devices from manufacturers like Siemens, ABB, Beckhoff etc.
Advantages at a glance:
- Tags for universal usage, self-adhesive or clip-on tags, depending on type
- For aligned equipment, e.g. circuit breakers, we supply ESG markers for clipping onto tag rails
- Individual laser-quality printing according to specifications

**For custom printing:** Please send us a file of our labeling software M-Print PRO or M-Print PRO Online (without installation) for your labeling specifications.

#### General ordering data

| | | |
|---|---|---|
| Type | ESG 6/17 K MC NE WS | Version |
| Order No. | 1880120000 | ESG, Device markers x 17 mm, PA 66, Colour: white, Self-adhesive |
| GTIN (EAN) | 4032248478804 | |
| Qty. | 200 pc(s). | |

| | | |
|---|---|---|
| Type | ESG 6/17 K MC NE GE | Version |
| Order No. | 1880110000 | ESG, Device markers x 17 mm, PA 66, Colour: yellow, Self-adhesive |
| GTIN (EAN) | 4032248478798 | |
| Qty. | 200 pc(s). | |

### ESG 6/15



**Guaranteed long service life: ESG**
The multi-colour and multi-format labels have a strong adhesive layer to ensure the best possible adhesion to the underlying surface. Double laminated polyester makes the basic material very thin and yet extremely tear-resistant.
**Your benefits with MultiMark**
- “Different materials for various requirements”
- Can be used with equipment from many manufacturers
- Device markers with a familiar design

#### General ordering data

| | | |
|---|---|---|
| Type | ESG 6/15 MM WS | Version |
| Order No. | 2619940000 | ESG, Device markers, 6 x 15 mm, white |
| GTIN (EAN) | 4050118626148 | |
| Qty. | 3,000 pc(s). | |

# DRR370110L

**Weidmüller Interface GmbH & Co. KG**
Klingenbergstraße 26
D-32758 Detmold
Germany

www.weidmueller.com

## Accessories

### Protection modules




Pluggable protective modules for the D-SERIES relay sockets, with optional protective functions.
• With free-wheeling diode or RC filter

#### General ordering data

| | | |
|---|---|---|
| Type | RIM 5 6/230VDC | Version |
| Order No. | 1174650000 | D-SERIES, Free-wheeling diode, Rated control voltage: 6...230 V DC, |
| GTIN (EAN) | 4032248971305 | Plug-in connection |
| Qty. | 10 pc(s). | |

### Sockets



Relay sockets for the D-SERIES DRR relays
• 2 or 3 CO contacts
• Screw connection

#### General ordering data

| | | |
|---|---|---|
| Type | SRD ECO 3CO | Version |
| Order No. | 1132820000 | D-SERIES DRR, Relay socket, Number of contacts: 3, CO contact, |
| GTIN (EAN) | 4032248952670 | Continuous current: 12 A, Screw connection |
| Qty. | 10 pc(s). | |

# DRR370110L

**Weidmüller Interface GmbH & Co. KG**
Klingenbergstraße 26
D-32758 Detmold
Germany

www.weidmueller.com

## Accessories

### Retaining clips



Retaining clip for D-SERIES DRR relays
- Metal retaining clip

#### General ordering data

| | | |
|---|---|---|
| Type | DRR CLIP M | Version |
| Order No. | 1134160000 | D-SERIES DRR, Retaining clip |
| GTIN (EAN) | 4032248953479 | |
| Qty. | 10 pc(s). | |

### Blank



ESG is the tried-and-tested marker in MultiCard format for use on many well-known electrical devices. The result is high-quality device marking with a high-contrast appearance.
Various types are available for devices from manufacturers like Siemens, ABB, Beckhoff etc.
Advantages at a glance:
- Tags for universal usage, self-adhesive or clip-on tags, depending on type
- For aligned equipment, e.g. circuit breakers, we supply ESG markers for clipping onto tag rails
- Individual laser-quality printing according to specifications

**For custom printing:** Please send us a file of our labeling software M-Print PRO or M-Print PRO Online (without installation) for your labeling specifications.

#### General ordering data

| | | |
|---|---|---|
| Type | ESG 6/15 K MC NE GE | Version |
| Order No. | 1880130000 | ESG, Device markers x 15 mm, PA 66, Colour: yellow, Self-adhesive |
| GTIN (EAN) | 4032248478910 | |
| Qty. | 200 pc(s). | |
| Type | ESG 6/15 K MC NE WS | Version |
| Order No. | 1880100000 | ESG, Device markers x 15 mm, PA 66, Colour: white, Self-adhesive |
| GTIN (EAN) | 4032248478781 | |
| Qty. | 200 pc(s). | |

Weidmüller

**DRR370110L**

**Weidmüller Interface GmbH & Co. KG**
Klingenbergstraße 26
D-32758 Detmold
Germany

www.weidmueller.com

# Accessories

## ESG 6/17



**Guaranteed long service life: ESG**
The multi-colour and multi-format labels have a strong adhesive layer to ensure the best possible adhesion to the underlying surface. Double laminated polyester makes the basic material very thin and yet extremely tear-resistant.
**Your benefits with MultiMark**
- "Different materials for various requirements"
- Can be used with equipment from many manufacturers
- Device markers with a familiar design

### General ordering data

| | | |
|---|---|---|
| Type | ESG 6/17 MM WS | Version |
| Order No. | 2005100000 | ESG, Device markers, 6 x 17 mm, white |
| GTIN (EAN) | 4050118390728 | |
| Qty. | 3,000 pc(s). | |

## Blank



ESG is the tried-and-tested marker in MultiCard format for use on many well-known electrical devices. The result is high-quality device marking with a high-contrast appearance.
Various types are available for devices from manufacturers like Siemens, ABB, Beckhoff etc.
Advantages at a glance:
- Tags for universal usage, self-adhesive or clip-on tags, depending on type
- For aligned equipment, e.g. circuit breakers, we supply ESG markers for clipping onto tag rails
- Individual laser-quality printing according to specifications

**For custom printing:** Please send us a file of our labeling software M-Print PRO or M-Print PRO Online (without installation) for your labeling specifications.

### General ordering data

| | | |
|---|---|---|
| Type | ESG 9/11 K MC NE WS | Version |
| Order No. | 1857440000 | ESG, Device markers x 11 mm, PA 66, Colour: white, Self-adhesive |
| GTIN (EAN) | 4032248402731 | |
| Qty. | 200 pc(s). | |

**DRR370110L**

**Weidmüller Interface GmbH & Co. KG**
Klingenbergstraße 26
D-32758 Detmold
Germany

www.weidmueller.com

## Drawings

### Miscellaneous

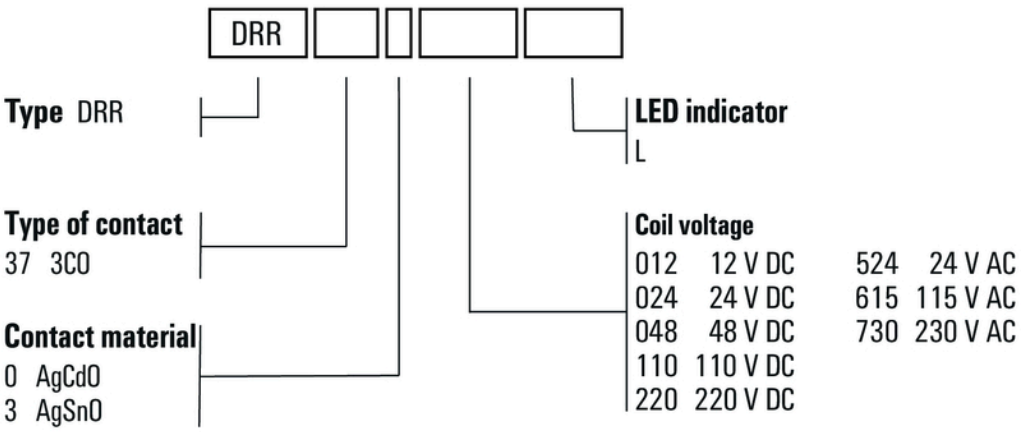


Type codes