DRL370730L

Weidmüller Interface GmbH & Co. KG
Klingenbergstraße 26
D-32758 Detmold
Germany

www.weidmueller.com

Product image



Similar to illustration

Individual relays within the D-SERIES DRL
- 3 CO contacts
- Optional AC or DC coils
- With integrated status LED

General ordering data

Version	D-SERIES DRL, Relay, Number of contacts: 3, CO contact AgCdO, Rated control voltage: 230 V AC, Continuous current: 10 A, Flat blade connections (4.8 mm x 0.5 mm), Test button available: No
Order No.	1133930000
Type	DRL370730L
GTIN (EAN)	4032248953431
Qty.	10 pc(s).
Delivery status	This article will no longer be available in the future.
Available until	2021-04-30
Alternative product	2765450000

Creation date January 21, 2022 2:06:43 AM CET

DRL370730L

Weidmüller Interface GmbH & Co. KG
Klingenbergstraße 26
D-32758 Detmold
Germany

www.weidmueller.com

Technical data

Dimensions and weights

Depth	36 mm	Depth (inches)	1.417 inch
Height	28 mm	Height (inches)	1.102 inch
Width	31.5 mm	Width (inches)	1.24 inch
Net weight	55.9 g		

Temperatures

Storage temperature	-25 °C...55 °C	Operating temperature	-25 °C...55 °C
Humidity	35 % to 85 % relative humidity level		

Environmental Product Compliance

REACH SVHC	Lead 7439-92-1

Rated data UL

Certificate No. (cURus)	E312083

Control side

Rated control voltage	230 V AC	Rated current AC	10 mA
Power rating	2 VA	Pull-in/drop-out voltage, typ.	184 V / 69 V AC
Coil resistance	8600 Ω ± 10 %	Status indicator	red LED

Load side

Rated switching voltage	250 V AC	Continuous current	10 A
Max. switching frequency at rated load	0.1 Hz	Min. switching power	100 mA @ 12 V
Inrush current	50 A / 50 ms	AC switching capacity (resistive), max.	2500 VA
DC switching capacity (resistive), max.	240 W @ 24 V	Switch-on delay	≤ 20 ms
Switch-off delay	≤ 20 ms	Contact type	3 CO contact (AgCdO)
Mechanical service life	10 x 10^6 switching cycles		

General data

Test button available	No	
Mechanical switch position indicator	Yes	
Colour	Transparent	
UL94 flammability rating component	Component	Relay cover
	UL94 flammability rating	V-2
	Component	Relay baseplate
	UL94 flammability rating	V-0
	Component	Relay status indicator
	UL94 flammability rating	HB

DRL370730L

Weidmüller Interface GmbH & Co. KG
Klingenbergstraße 26
D-32758 Detmold
Germany

www.weidmueller.com

Technical data

Insulation coordination

Rated voltage	250 V	Pollution severity	3
Surge voltage category	III	Insulating material group	IIIa
Clearance and creepage distances for control side - load side	≥ 4 mm	Dielectric strength for control side - load side	2 kV_{eff} / 1 min
Dielectric strength of neighbouring contacts	1.2 kV_{eff} /1 min.	Dielectric strength of open contact	1.2 kV_{eff} /1 min.
Impulse withstand voltage	5 kV (1.2/50 µs)	Protection degree	IP20

Further details of approvals / standards

Standards	IEC 61810-1, EN 60664-1:2007, EN 61000-6-2:2005, EN 61000-6-4:2007 + A1:2011, UL 508	Certificate No. (cURus)	E312083

Connection data

Wire connection method	Flat blade connections (4.8 mm x 0.5 mm)

Classifications

ETIM 6.0	EC001437	ETIM 7.0	EC001437
ETIM 8.0	EC001437	ECLASS 9.0	27-37-16-01
ECLASS 9.1	27-37-16-01	ECLASS 10.0	27-37-16-01
ECLASS 11.0	27-37-16-01		

Important note

Product information	This article uses an exemption named in Annex III of the RoHS Directive 2011/65/EU "8b - Cadmium and cadmium compounds in electrical contacts", which could only be valid until 21.07.2021, depending on the product category. Please check whether you can use this article depending on the place of marketing and the product category concerned. Alternative product with modified contact material:

Approvals

Approvals	
ROHS	Conform
UL File Number Search	E312083

Downloads

Engineering Data	CAD data – STEP
Engineering Data	EPLAN, WSCAD
Product Change Notification	Product Change Notification - Deutsch Product Change Notification - English
Catalogues	Catalogues in PDF-format
Brochures	

DRL370730L

Weidmüller Interface GmbH & Co. KG
Klingenbergstraße 26
D-32758 Detmold
Germany

www.weidmueller.com

Drawings

Wiring diagram

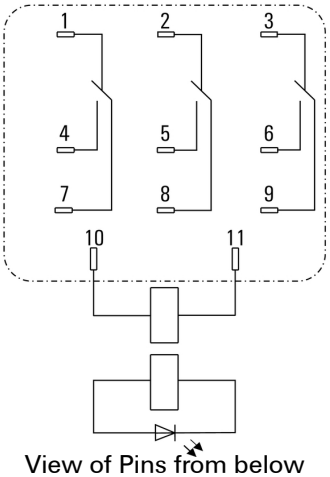

View of Pins from below

DC load limit curve

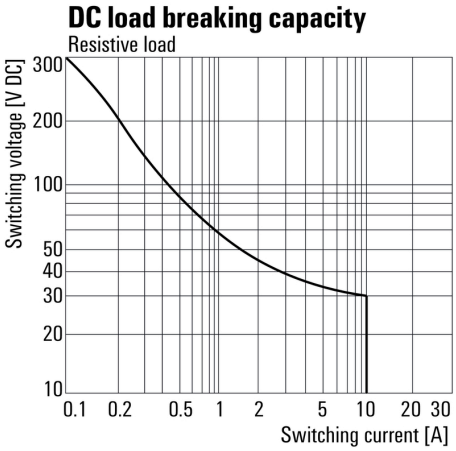

DC load limit curve
Resistive load

Graph

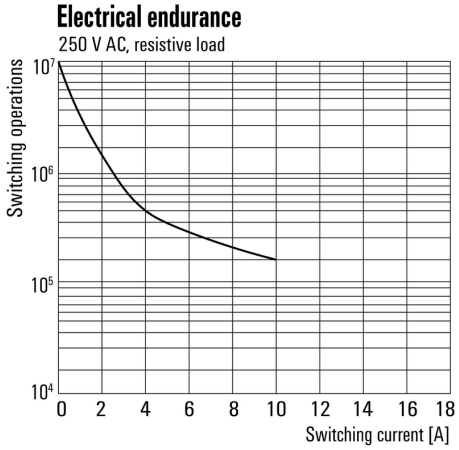

Electrical service life

Graph

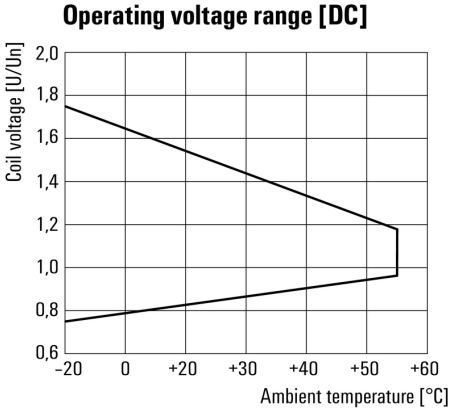

DC operational voltage range

Dimensional drawing

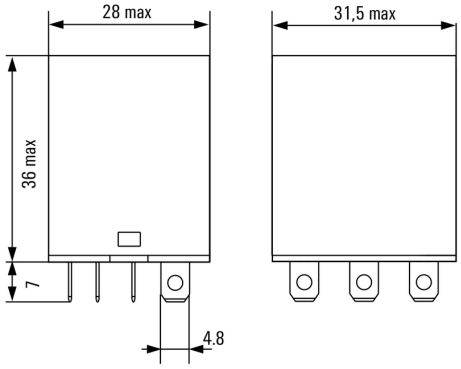

DRL370730L

Weidmüller Interface GmbH & Co. KG
Klingenbergstraße 26
D-32758 Detmold
Germany

www.weidmueller.com

Accessories

Blank



ESG is the tried-and-tested marker in MultiCard format for use on many well-known electrical devices. The result is high-quality device marking with a high-contrast appearance.
Various types are available for devices from manufacturers like Siemens, ABB, Beckhoff etc.
Advantages at a glance:
- Tags for universal usage, self-adhesive or clip-on tags, depending on type
- For aligned equipment, e.g. circuit breakers, we supply ESG markers for clipping onto tag rails
- Individual laser-quality printing according to specifications

For custom printing: Please send us a file of our labeling software M-Print PRO or M-Print PRO Online (without installation) for your labeling specifications.

General ordering data

Type	ESG 6/17 K MC NE WS	Version
Order No.	1880120000	ESG, Device markers x 17 mm, PA 66, Colour: white, Self-adhesive
GTIN (EAN)	4032248478804	
Qty.	200 pc(s).	

Type	ESG 6/17 K MC NE GE	Version
Order No.	1880110000	ESG, Device markers x 17 mm, PA 66, Colour: yellow, Self-adhesive
GTIN (EAN)	4032248478798	
Qty.	200 pc(s).	

ESG 6/15



Guaranteed long service life: ESG
The multi-colour and multi-format labels have a strong adhesive layer to ensure the best possible adhesion to the underlying surface. Double laminated polyester makes the basic material very thin and yet extremely tear-resistant.
Your benefits with MultiMark
- “Different materials for various requirements”
- Can be used with equipment from many manufacturers
- Device markers with a familiar design

General ordering data

Type	ESG 6/15 MM WS	Version
Order No.	2619940000	ESG, Device markers, 6 x 15 mm, white
GTIN (EAN)	4050118626148	
Qty.	3,000 pc(s).	

DRL370730L

Weidmüller Interface GmbH & Co. KG
Klingenbergstraße 26
D-32758 Detmold
Germany

www.weidmueller.com

Accessories

Sockets



Relay sockets for the D-SERIES DRL relays
- 2, 3 and 4 CO contacts
- Screw connection

General ordering data

Type	SLD F 3CO	Version
Order No.	7760056226	D-SERIES DRL, Relay socket, Number of contacts: 3, CO contact,
GTIN (EAN)	6944169634024	Continuous current: 10 A, Screw connection
Qty.	10 pc(s).	

Protection modules



Pluggable protective modules for the D-SERIES relay sockets, with optional protective functions.
- With free-wheeling diode or RC filter

General ordering data

Type	RIM 3 110/230VAC LED	Version
Order No.	7760056045	D-SERIES, RC filter, Rated control voltage: 110...230 V AC, Plug-in
GTIN (EAN)	4032248878147	connection
Qty.	10 pc(s).	
Type	RIM 3 110/230VAC	Version
Order No.	7760056014	D-SERIES, RC filter, Rated control voltage: 110...230 V AC, Plug-in
GTIN (EAN)	4032248878109	connection
Qty.	10 pc(s).	

DRL370730L

Weidmüller Interface GmbH & Co. KG
Klingenbergstraße 26
D-32758 Detmold
Germany

www.weidmueller.com

Accessories

Retaining clips



Retaining clip for D-SERIES DRL relays
- Metal retaining clip

General ordering data

Type	SLD CLIP 3CO M	Version
Order No.	7760056234	D-SERIES, Retaining clip
GTIN (EAN)	6944169634048	
Qty.	10 pc(s).	

Blank



ESG is the tried-and-tested marker in MultiCard format for use on many well-known electrical devices. The result is high-quality device marking with a high-contrast appearance.
Various types are available for devices from manufacturers like Siemens, ABB, Beckhoff etc.
Advantages at a glance:
- Tags for universal usage, self-adhesive or clip-on tags, depending on type
- For aligned equipment, e.g. circuit breakers, we supply ESG markers for clipping onto tag rails
- Individual laser-quality printing according to specifications

For custom printing: Please send us a file of our labeling software M-Print PRO or M-Print PRO Online (without installation) for your labeling specifications.

General ordering data

Type	ESG 6/15 K MC NE GE	Version
Order No.	1880130000	ESG, Device markers x 15 mm, PA 66, Colour: yellow, Self-adhesive
GTIN (EAN)	4032248478910	
Qty.	200 pc(s).	
Type	ESG 6/15 K MC NE WS	Version
Order No.	1880100000	ESG, Device markers x 15 mm, PA 66, Colour: white, Self-adhesive
GTIN (EAN)	4032248478781	
Qty.	200 pc(s).	

DRL370730L

Weidmüller Interface GmbH & Co. KG
Klingenbergstraße 26
D-32758 Detmold
Germany

www.weidmueller.com

Accessories

ESG 6/17



Guaranteed long service life: ESG
The multi-colour and multi-format labels have a strong adhesive layer to ensure the best possible adhesion to the underlying surface. Double laminated polyester makes the basic material very thin and yet extremely tear-resistant.
Your benefits with MultiMark
- "Different materials for various requirements"
- Can be used with equipment from many manufacturers
- Device markers with a familiar design

General ordering data

Type	ESG 6/17 MM WS	Version
Order No.	2005100000	ESG, Device markers, 6 x 17 mm, white
GTIN (EAN)	4050118390728	
Qty.	3,000 pc(s).	

Blank



ESG is the tried-and-tested marker in MultiCard format for use on many well-known electrical devices. The result is high-quality device marking with a high-contrast appearance.
Various types are available for devices from manufacturers like Siemens, ABB, Beckhoff etc.
Advantages at a glance:
- Tags for universal usage, self-adhesive or clip-on tags, depending on type
- For aligned equipment, e.g. circuit breakers, we supply ESG markers for clipping onto tag rails
- Individual laser-quality printing according to specifications

For custom printing: Please send us a file of our labeling software M-Print PRO or M-Print PRO Online (without installation) for your labeling specifications.

General ordering data

Type	ESG 9/11 K MC NE WS	Version
Order No.	1857440000	ESG, Device markers x 11 mm, PA 66, Colour: white, Self-adhesive
GTIN (EAN)	4032248402731	
Qty.	200 pc(s).	

DRL370730L

Weidmüller Interface GmbH & Co. KG
Klingenbergstraße 26
D-32758 Detmold
Germany

www.weidmueller.com

Accessories

LED



Pluggable protective modules for the D-SERIES relay sockets, with optional protective functions.
• With green LED

General ordering data

Type	RIM 3 110/230VUC	Version
Order No.	7940018455	D-SERIES, LED module, Rated control voltage: 110...230 V UC, Plug-in
GTIN (EAN)	4032248878185	connection
Qty.	20 pc(s).	

DRL370730L

Weidmüller Interface GmbH & Co. KG
Klingenbergstraße 26
D-32758 Detmold
Germany

www.weidmueller.com

Drawings

Miscellaneous

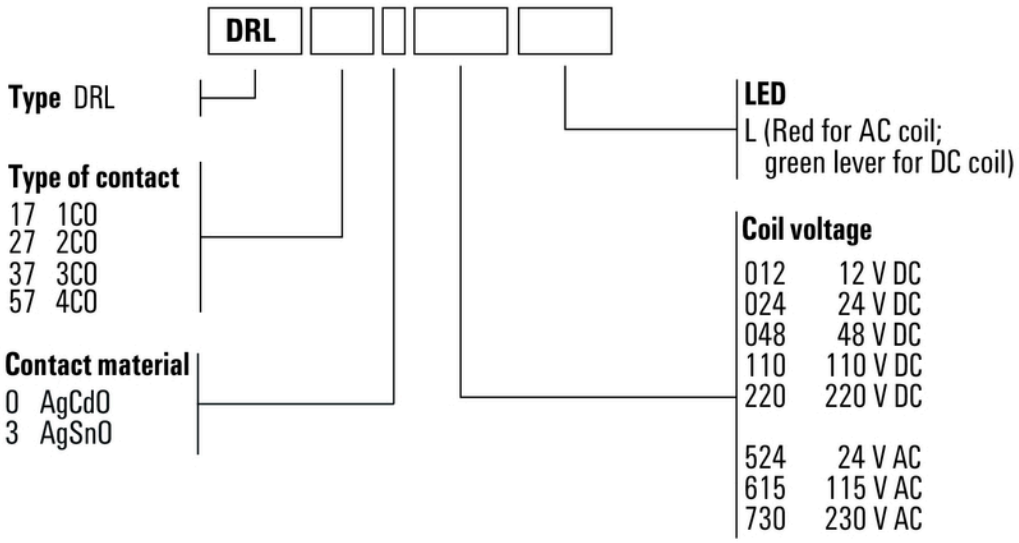

Type codes