BLZ 7.62HP/09/180LR SN OR BX

Weidmüller Interface GmbH & Co. KG
Klingenbergstraße 26
D-32758 Detmold
Germany

www.weidmueller.com

Product image



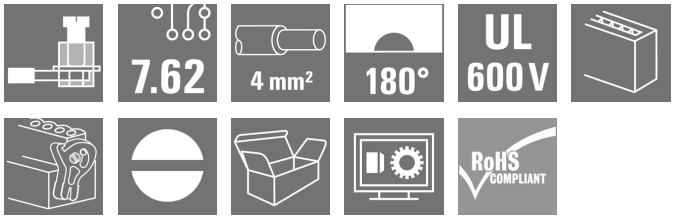

Power on board - 100% safety, 100% integration, 100% cost-effectiveness:
The compact, efficient solution for UL-600V applications in the lower performance range up to 12kVA.

- 29 A at 630 V (IEC)
- 20 A at 600 V (UL)
- Single compartment mating profile
- Clamping range: 0.08 - 4 mm² / AWG 28 - 12

Assistance with device approval:

- meets the requirements for 600 V in accordance with UL508/UL840
- meets the more stringent touch-safety requirements of IEC68100-5-1

The slimming cure for multiple-stage device series: reduced size and cut costs in the high-volume lower performance range without compromising device approval!

General ordering data

Version	PCB plug-in connector, female plug, 7.62 mm, Number of poles: 9, 180°, Clamping yoke connection, Clamping range, max. : 4 mm², Box
Order No.	1164910000
Type	BLZ 7.62HP/09/180LR SN OR BX
GTIN (EAN)	4032248955022
Qty.	15 pc(s).
Product data	IEC: 630 V / 29 A / 0.2 - 4 mm² UL: 6000 V / 20 A / AWG 20 - AWG 12
Packaging	Box

BLZ 7.62HP/09/180LR SN OR BX

Weidmüller Interface GmbH & Co. KG
Klingenbergstraße 26
D-32758 Detmold
Germany

www.weidmueller.com

Technical data

Dimensions and weights

Depth	23.3 mm	Depth (inches)	0.917 inch
Height	18.3 mm	Height (inches)	0.72 inch
Net weight	13.5 g		

System Parameters

Product family	OMNIMATE Power - series BL/SL 7.62HP	Type of connection	Field connection
Wire connection method	Clamping yoke connection	Pitch in mm (P)	7.62 mm
Pitch in inches (P)	0.3 "	Conductor outlet direction	180°
Number of poles	9	L1 in mm	60.96 mm
L1 in inches	2.4 "	Number of rows	1
Pin series quantity	1	Rated cross-section	2.5 mm²
Touch-safe protection acc. to DIN VDE 57 106	Safe from finger touch	Touch-safe protection acc. to DIN VDE 0470	IP 20
Protection degree	IP20	Volume resistance	5.00 mΩ
Can be coded	Yes	Stripping length	7 mm
Tightening torque, min.	0.4 Nm	Tightening torque, max.	0.5 Nm
Clamping screw	M 2.5	Screwdriver blade	0.6 x 3.5
Screwdriver blade standard	DIN 5264	Plugging cycles	25
Plugging force/pole, max.	9.5 N	Pulling force/pole, max.	8.5 N

Material data

Insulating material	PBT	Colour	orange
Colour chart (similar)	RAL 2000	Insulating material group	IIIa
Comparative Tracking Index (CTI)	≥ 200	Insulation strength	≥ 10^8 Ω
UL 94 flammability rating	V-0	Contact material	Cu-alloy
Contact surface	tinned	Layer structure of plug contact	4...8 µm Sn hot-dip tinned
Storage temperature, min.	-40 °C	Storage temperature, max.	70 °C
Operating temperature, min.	-50 °C	Operating temperature, max.	100 °C
Temperature range, installation, min.	-25 °C	Temperature range, installation, max.	100 °C

Conductors suitable for connection

Clamping range, min.	0.08 mm²
Clamping range, max.	4 mm²
Wire connection cross section AWG, min.	AWG 28
Wire connection cross section AWG, max.	AWG 12
Solid, min. H05(07) V-U	0.2 mm²
Solid, max. H05(07) V-U	4 mm²
Flexible, min. H05(07) V-K	0.2 mm²
Flexible, max. H05(07) V-K	4 mm²
w. plastic collar ferrule, DIN 46228 pt 4, min.	0.2 mm²
w. plastic collar ferrule, DIN 46228 pt 4, max.	2.5 mm²
w. wire end ferrule, DIN 46228 pt 1, min.	0.2 mm²
w. wire end ferrule, DIN 46228 pt 1, max.	2.5 mm²
Plug gauge in accordance with EN 60999 a x b; ø	2.8 mm x 2.4 mm

BLZ 7.62HP/09/180LR SN OR BX

Weidmüller Interface GmbH & Co. KG
Klingenbergstraße 26
D-32758 Detmold
Germany

www.weidmueller.com

Technical data

Clampable conductor	Cross-section for conductor connection	Type	fine-wired	
		nominal	0.25 mm²	
	wire end ferrule	Stripping length	nominal	10 mm
		Recommended wire-end ferrule	H0,25/12 HBL	
	Cross-section for conductor connection	Type	fine-wired	
		nominal	0.34 mm²	
	wire end ferrule	Stripping length	nominal	10 mm
		Recommended wire-end ferrule	H0,34/12 TK	
	Cross-section for conductor connection	Type	fine-wired	
		nominal	0.5 mm²	
	wire end ferrule	Stripping length	nominal	6 mm
		Recommended wire-end ferrule	H0,5/6	
	Cross-section for conductor connection	Type	fine-wired	
		nominal	0.75 mm²	
	wire end ferrule	Stripping length	nominal	6 mm
		Recommended wire-end ferrule	H0,75/6	
	Cross-section for conductor connection	Type	fine-wired	
		nominal	1 mm²	
	wire end ferrule	Stripping length	nominal	6 mm
		Recommended wire-end ferrule	H1,0/6	
	Cross-section for conductor connection	Type	fine-wired	
		nominal	1.5 mm²	
	wire end ferrule	Stripping length	nominal	7 mm
		Recommended wire-end ferrule	H1,5/7	
	Cross-section for conductor connection	Type	fine-wired	
		nominal	2.5 mm²	
	wire end ferrule	Stripping length	nominal	7 mm
		Recommended wire-end ferrule	H2,5/7	
Reference text	The outside diameter of the plastic collar should not be larger than the pitch (P), Length of ferrules is to be chosen depending on the product and the rated voltage.			

Rated data acc. to IEC

tested acc. to standard	IEC 60664-1, IEC 61984	Rated current, min. number of poles (Tu=20°C)	29 A
Rated current, max. number of poles (Tu=20°C)	26.5 A	Rated current, min. number of poles (Tu=40°C)	25 A
Rated current, max. number of poles (Tu=40°C)	23 A	Rated voltage for surge voltage class / pollution degree II/2	630 V
Rated voltage for surge voltage class / pollution degree III/2	500 V	Rated voltage for surge voltage class / pollution degree III/3	400 V
Rated impulse voltage for surge voltage class/ pollution degree II/2	4 kV	Rated impulse voltage for surge voltage class/ pollution degree III/2	6 kV
Rated impulse voltage for surge voltage class/ contamination degree III/3	6 kV	Short-time withstand current resistance	3 x 1s with 180 A
Clearance, min.	9.8 mm	Creepage distance, min.	11.3 mm

BLZ 7.62HP/09/180LR SN OR BX

Weidmüller Interface GmbH & Co. KG
Klingenbergstraße 26
D-32758 Detmold
Germany

www.weidmueller.com

Technical data

Rated data acc. to CSA

Rated voltage (Use group B / CSA)	600 V	Rated voltage (Use group C / CSA)	600 V
Rated voltage (Use group D / CSA)	600 V	Rated current (Use group B / CSA)	20 A
Rated current (Use group C / CSA)	20 A	Rated current (Use group D / CSA)	5 A
Wire cross-section, AWG, min.	AWG 20	Wire cross-section, AWG, max.	AWG 12

Rated data acc. to UL 1059

Institute (cURus)		Certificate No. (cURus)	E60693
Rated voltage (Use group B / UL 1059)	6,000 V	Rated voltage (Use group C / UL 1059)	600 V
Rated voltage (Use group D / UL 1059)	600 V	Rated current (Use group B / UL 1059)	20 A
Rated current (Use group C / UL 1059)	20 A	Rated current (Use group D / UL 1059)	5 A
Wire cross-section, AWG, min.	AWG 20	Wire cross-section, AWG, max.	AWG 12
Reference to approval values	Specifications are maximum values, details - see approval certificate.		

Packing

Packaging	Box	VPE length	338 mm
VPE width	130 mm	VPE height	27 mm

Type tests

Test: Durability of markings	Standard	DIN EN 61984 section 7.3.2 / 09.02 taking pattern from DIN EN 60068-2-70 / 07.96
	Test	mark of origin, type identification, pitch, type of material, date clock
	Evaluation	available
	Test	durability
	Evaluation	passed
Test: Misengagement (Non-interchangeability)	Standard	DIN EN 61984 section 6.3 and 6.9.1 / 09.02
	Test	180° turned with coding elements
	Evaluation	passed
	Test	180° turned without coding elements
	Evaluation	passed

BLZ 7.62HP/09/180LR SN OR BX

Weidmüller Interface GmbH & Co. KG
Klingenbergstraße 26
D-32758 Detmold
Germany

www.weidmueller.com

Technical data

Test: Clampable cross section	Standard		DIN EN 60999-1 section 7 and 9.1 / 12.00, DIN EN 60947-1 section 8.2.4.5.1 / 12.02
	Conductor type	Type of conductor and conductor cross-section	solid 0.5 mm²
		Type of conductor and conductor cross-section	stranded 0.5 mm²
		Type of conductor and conductor cross-section	solid 2.5 mm²
		Type of conductor and conductor cross-section	stranded 2.5 mm²
		Type of conductor and conductor cross-section	AWG 20/1
		Type of conductor and conductor cross-section	AWG 20/19
		Type of conductor and conductor cross-section	AWG 12/1
		Type of conductor and conductor cross-section	AWG 12/19
	Evaluation		passed
Test for damage to and accidental loosening of conductors	Standard		DIN EN 60999-1 section 9.4 / 12.00
	Requirement		0.2 kg
	Conductor type	Type of conductor and conductor cross-section	AWG 28/1
		Type of conductor and conductor cross-section	AWG 28/19
	Evaluation		passed
	Requirement		0.3 kg
	Conductor type	Type of conductor and conductor cross-section	H05V-U0.5
		Type of conductor and conductor cross-section	H05V-K0.5
	Evaluation		passed
	Requirement		0.7 kg
	Conductor type	Type of conductor and conductor cross-section	AWG 14/1
		Type of conductor and conductor cross-section	AWG 14/19
	Evaluation		passed
	Requirement		0.9 kg
	Conductor type	Type of conductor and conductor cross-section	H07V-U4.0
		Type of conductor and conductor cross-section	H07V-K4.0
	Evaluation		passed

BLZ 7.62HP/09/180LR SN OR BX

Weidmüller Interface GmbH & Co. KG
Klingenbergstraße 26
D-32758 Detmold
Germany

www.weidmueller.com

Technical data

Pull-out test	Standard	DIN EN 60999-1 section 9.5 / 12.00	
	Requirement	≥5 N	
	Conductor type	Type of conductor and conductor cross-section	AWG 28/1
		Type of conductor and conductor cross-section	AWG 28/19
	Evaluation	passed	
	Requirement	≥20 N	
	Conductor type	Type of conductor and conductor cross-section	H05V-U0.5
		Type of conductor and conductor cross-section	H05V-K0.5
	Evaluation	passed	
	Requirement	≥50 N	
	Conductor type	Type of conductor and conductor cross-section	AWG 14/1
		Type of conductor and conductor cross-section	AWG 14/19
		Type of conductor and conductor cross-section	H07V-K4.0
	Evaluation	passed	
	Requirement	≥60 N	
	Conductor type	Type of conductor and conductor cross-section	H07V-U4.0
	Evaluation	passed	

Classifications

ETIM 6.0	EC002638	ETIM 7.0	EC002638
ETIM 8.0	EC002638	ETIM 9.0	EC002638
ECLASS 9.0	27-44-03-09	ECLASS 9.1	27-44-03-09
ECLASS 10.0	27-44-03-09	ECLASS 11.0	27-46-02-02
ECLASS 12.0	27-46-02-02	ECLASS 13.0	27-46-02-02
ECLASS 14.0	27-46-02-02		

Environmental Product Compliance

REACH SVHC	/
RoHS Compliance Status	Compliant without exemption

BLZ 7.62HP/09/180LR SN OR BX

Weidmüller Interface GmbH & Co. KG
Klingenbergstraße 26
D-32758 Detmold
Germany

www.weidmueller.com

Technical data

Important note

IPC conformity	Conformity: The products are developed, manufactured and delivered according international recognized standards and norms and comply with the assured properties in the data sheet resp. fulfill decorative properties in accordance with IPC-A-610 "Class 2". Further claims on the products can be evaluated on request.
Notes	• Additional variants on request • Gold-plated contact surfaces on request • Rated current related to rated cross-section & min. No. of poles. • Wire end ferrule without plastic collar to DIN 46228/1 • Wire end ferrule with plastic collar to DIN 46228/4 • P on drawing = pitch • Rated data refer only to the component itself. Clearance and creepage distances to other components are to be designed in accordance with the relevant application standards. • In accordance with IEC 61984, OMNIMATE-connectors are connectors without breaking capacity (COC). During designated use, connectors are not allowed to be engaged or disengaged when live or under load • Long term storage of the product with average temperature of 50 °C and maximum humidity 70%, 36 months

Approvals

Approvals	c UL us
ROHS	Conform
UL File Number Search	UL Website
Certificate No. (cURus)	E60693

Downloads

Approval/Certificate/Document of Conformity	Declaration of the Manufacturer
Engineering Data	CAD data – STEP
Product Change Notification	20220627 Change OMNIMATE® Power BLZ 7.62HP 20220627 Technische Änderung OMNIMATE® Power BLZ 7.62HP
User Documentation	QR-Code product handling video
Catalogues	Catalogues in PDF-format
Brochures	FL DRIVES EN MB DEVICE MANUF. EN FL DRIVES DE FL HEATING ELECTR EN FL APPL_INVERTER EN FL_BASE_STATION_EN FL ELEVATOR EN FL POWER SUPPLY EN FL 72H SAMPLE SER EN PO OMNIMATE EN

BLZ 7.62HP/09/180LR SN OR BX

Weidmüller Interface GmbH & Co. KG
Klingenbergstraße 26
D-32758 Detmold
Germany

www.weidmueller.com

Drawings

Product image

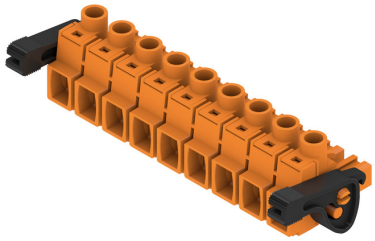

Dimensional drawing

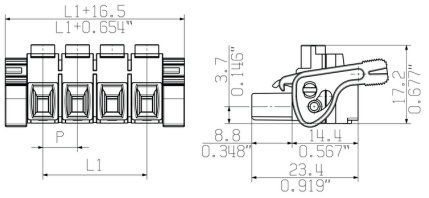

Graph

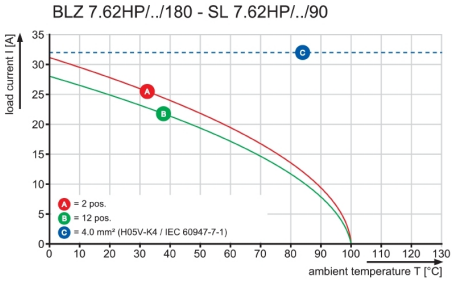

Graph

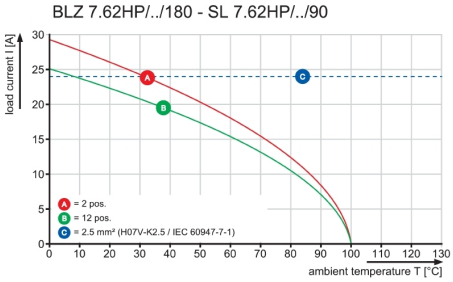

The reproduction, distribution and utilization of this document as well as the communication of its contents to others without explicit authorization is prohibited.
Offenders will be held liable for the payment of damages. Weidmueller exclusively reserves the right to file for patents, utility models or designs.
© Weidmueller Interface GmbH & Co. KG

The English version is binding

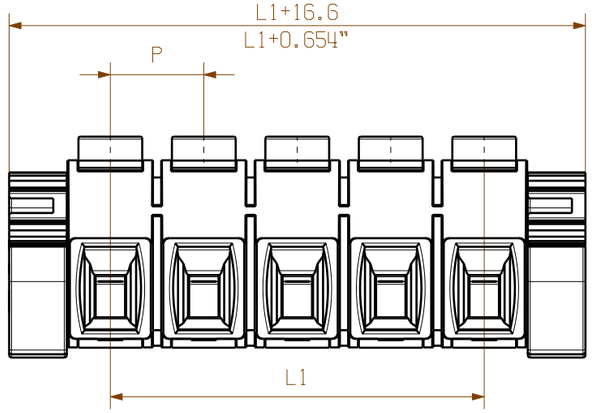

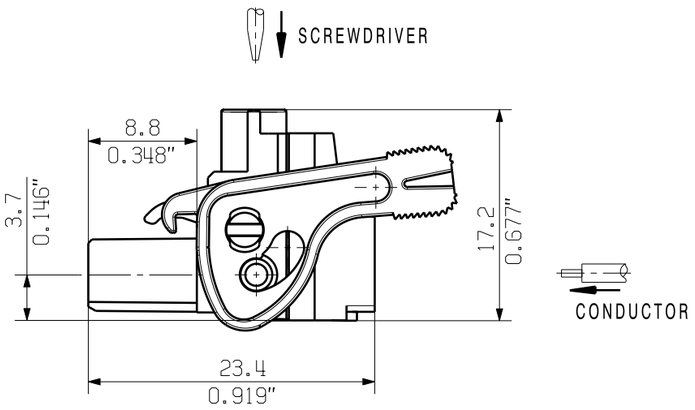

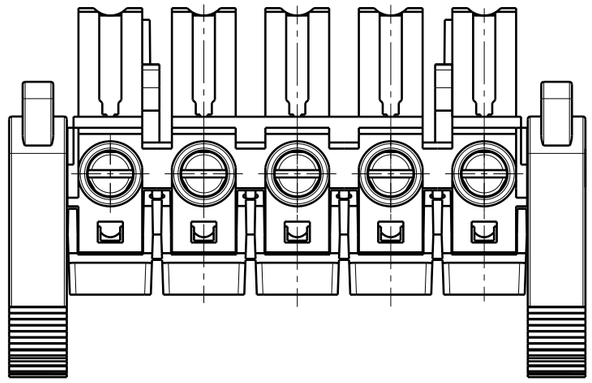

M 1:1

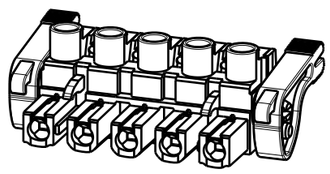

n	L1 [mm]	L1 [Inch]
12	83,82	3,300
11	76,20	3,000
10	68,58	2,700
9	60,96	2,400
8	53,34	2,100
7	45,72	1,800
6	38,10	1,500
5	30,48	1,200
4	22,86	0,900
3	15,24	0,600
2	7,62	0,300

P=Raster/pitch
shown: BLZ 7.62HP/05/180LR

RoHS COMPLIANT

For the mounting of PCBs, it should be noted that the rated data given in the catalogue relates only to the connection elements. The neccessary creepage and clearance paths must be observed in connection with the respective applicant in accordance to VDE 0110. The current-carrying capacity and pitch tolerance is to be determined according to DIN IEC 326 part 3 very fine.

Weidmueller connectors are tested to the DIN VDE 0627 standard, and are valid for its field of application. Provided that the connectors are used to the intended purpose, all requirements with respect to the occuring of electrical, mechanical, thermic and corrosive stress will be satisfied.

General Tolerances:	WN700144-W..	WN 212010	X ISO 2768-mK
Changes: EC00007383			
Mat. No. (SAP) 1095700000			
Drawings Assembly			
Drawn	Helis, Maria		
Responsible	Hertel, Suzanne		
Approved	Lang, Thomas	13.10.2022	

Tolerances ISO 8015

Weidmüller

49781 — Drawing no. — 10 — Index

Scale: 2:1 — Sheet 2 / 3

BLZ 7.62HP/../180LH/LR

SOCKET BLOCK

BUCHSENLEISTE