BLF 5.00HC/22/180 SN OR BX

Weidmüller Interface GmbH & Co. KG
Klingenbergstraße 26
D-32758 Detmold
Germany

www.weidmueller.com

Product image

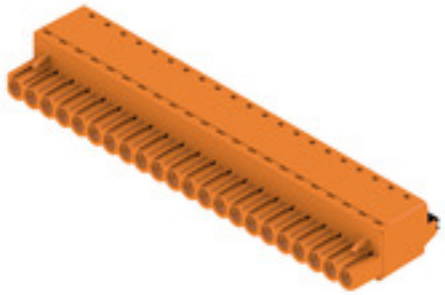

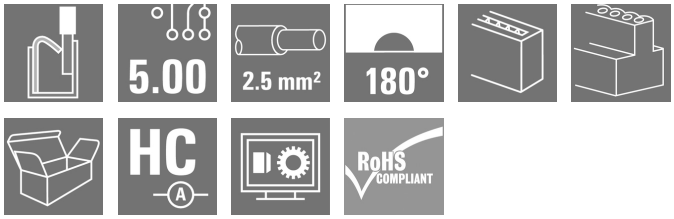

Just as reliable as the millionfold proven original and featuring innovative details:
The BLF 5.00HC PUSH IN version of the BLZ 5.00HC female connector features a new connection system and a more compact design. Weidmüller's innovative PUSH IN spring connection system stands for the future of easy and tool-free wire connection. HC = High Current.
In terms of versatility, the BLF 5.00HC offers just as much as the older versions:

- 3 tested-and-proven wire outlet directions provide the usual flexibility for application-specific design
- 4 flange variations and the patented release latch allow the locking concept to be based on the requirements of the user

General ordering data

Version	PCB plug-in connector, female plug, 5.00 mm, Number of poles: 22, 180°, PUSH IN with actuator, Clamping range, max. : 3.31 mm², Box
Order No.	1211790000
Type	BLF 5.00HC/22/180 SN OR BX
GTIN (EAN)	4032248993246
Qty.	12 pc(s).
Product data	IEC: 400 V / 23 A / 0.2 - 2.5 mm² UL: 300 V / 18.5 A / AWG 26 - AWG 12
Packaging	Box

BLF 5.00HC/22/180 SN OR BX

Weidmüller Interface GmbH & Co. KG
Klingenbergstraße 26
D-32758 Detmold
Germany

www.weidmueller.com

Technical data

Dimensions and weights

Depth	27.6 mm	Depth (inches)	1.087 inch
Height	14.2 mm	Height (inches)	0.559 inch
Width	110 mm	Width (inches)	4.331 inch
Net weight	39.5 g		

System Parameters

Product family	OMNIMATE Signal - series BL/SL 5.00	Type of connection	Field connection
Wire connection method	PUSH IN with actuator	Pitch in mm (P)	5 mm
Pitch in inches (P)	0.197 "	Conductor outlet direction	180°
Number of poles	22	L1 in mm	105 mm
L1 in inches	4.137 "	Number of rows	1
Pin series quantity	1	Rated cross-section	2.5 mm²
Touch-safe protection acc. to DIN VDE 57 106	Safe from back-of-hand touch	Touch-safe protection acc. to DIN VDE 0470	IP20 plugged/ IP10 un-plugged
Protection degree	IP20	Volume resistance	≤5 mΩ
Can be coded	Yes	Stripping length	10 mm
Screwdriver blade	0.6 x 3.5	Screwdriver blade standard	DIN 5264
Plugging cycles	25	Plugging force/pole, max.	7 N
Pulling force/pole, max.	5.5 N		

Material data

Insulating material	PBT	Colour	orange
Colour chart (similar)	RAL 2000	Insulating material group	IIIa
Comparative Tracking Index (CTI)	≥ 200	UL 94 flammability rating	V-0
Contact material	Cu-alloy	Contact surface	tinned
Layer structure of plug contact	4...8 µm Sn hot-dip tinned	Storage temperature, min.	-40 °C
Storage temperature, max.	70 °C	Operating temperature, min.	-50 °C
Operating temperature, max.	100 °C	Temperature range, installation, min.	-30 °C
Temperature range, installation, max.	100 °C		

Conductors suitable for connection

Clamping range, min.	0.13 mm²
Clamping range, max.	3.31 mm²
Wire connection cross section AWG, min.	AWG 26
Wire connection cross section AWG, max.	AWG 12
Solid, min. H05(07) V-U	0.2 mm²
Solid, max. H05(07) V-U	2.5 mm²
Flexible, min. H05(07) V-K	0.2 mm²
Flexible, max. H05(07) V-K	2.5 mm²
w. plastic collar ferrule, DIN 46228 pt 4, max.	2.5 mm²
w. wire end ferrule, DIN 46228 pt 1, min.	0.25 mm²
w. wire end ferrule, DIN 46228 pt 1, max.	2.5 mm²
Plug gauge in accordance with EN 60999 a x b; ø	2.8 mm x 2.0 mm

BLF 5.00HC/22/180 SN OR BX

Weidmüller Interface GmbH & Co. KG
Klingenbergstraße 26
D-32758 Detmold
Germany

www.weidmueller.com

Technical data

Clampable conductor	Cross-section for conductor connection	Type	fine-wired	
		nominal	0.5 mm²	
	wire end ferrule	Stripping length	nominal	12 mm
		Recommended wire-end ferrule	H0,5/16 OR	
		Stripping length	nominal	10 mm
		Recommended wire-end ferrule	H0,5/10	
	Cross-section for conductor connection	Type	fine-wired	
		nominal	0.75 mm²	
	wire end ferrule	Stripping length	nominal	12 mm
		Recommended wire-end ferrule	H0,75/16 W	
		Stripping length	nominal	10 mm
		Recommended wire-end ferrule	H0,75/10	
	Cross-section for conductor connection	Type	fine-wired	
		nominal	1 mm²	
	wire end ferrule	Stripping length	nominal	12 mm
		Recommended wire-end ferrule	H1,0/16D R	
		Stripping length	nominal	10 mm
		Recommended wire-end ferrule	H1,0/10	
	Cross-section for conductor connection	Type	fine-wired	
		nominal	1.5 mm²	
	wire end ferrule	Stripping length	nominal	10 mm
		Recommended wire-end ferrule	H1,5/10	
		Stripping length	nominal	12 mm
		Recommended wire-end ferrule	H1,5/16 R	
	Cross-section for conductor connection	Type	fine-wired	
		nominal	2.5 mm²	
	wire end ferrule	Stripping length	nominal	10 mm
		Recommended wire-end ferrule	H2,5/10	
Reference text	The outside diameter of the plastic collar should not be larger than the pitch (P), Length of ferrules is to be chosen depending on the product and the rated voltage.			

Rated data acc. to IEC

tested acc. to standard	IEC 60664-1, IEC 61984	Rated current, min. number of poles (Tu=20°C)	23 A
Rated current, max. number of poles (Tu=20°C)	18 A	Rated current, min. number of poles (Tu=40°C)	21 A
Rated current, max. number of poles (Tu=40°C)	16 A	Rated voltage for surge voltage class / pollution degree II/2	400 V
Rated voltage for surge voltage class / pollution degree III/2	320 V	Rated voltage for surge voltage class / pollution degree III/3	250 V
Rated impulse voltage for surge voltage class/ pollution degree II/2	4 kV	Rated impulse voltage for surge voltage class/ pollution degree III/2	4 kV
Rated impulse voltage for surge voltage class/ contamination degree III/3	4 kV	Short-time withstand current resistance	3 x 1s with 120 A

BLF 5.00HC/22/180 SN OR BX

Weidmüller Interface GmbH & Co. KG
Klingenbergstraße 26
D-32758 Detmold
Germany

www.weidmueller.com

Technical data

Rated data acc. to CSA

Institute (CSA)		Certificate No. (CSA)	200039-1121690
Rated voltage (Use group B / CSA)	300 V	Rated voltage (Use group D / CSA)	300 V
Rated current (Use group B / CSA)	10 A	Rated current (Use group D / CSA)	10 A
Wire cross-section, AWG, min.	AWG 12	Wire cross-section, AWG, max.	AWG 26
Reference to approval values	Specifications are maximum values, details - see approval certificate.		

Rated data acc. to UL 1059

Institute (cURus)		Certificate No. (cURus)	E60693
Rated voltage (Use group B / UL 1059)	300 V	Rated voltage (Use group D / UL 1059)	300 V
Rated current (Use group B / UL 1059)	18.5 A	Rated current (Use group D / UL 1059)	10 A
Wire cross-section, AWG, min.	AWG 26	Wire cross-section, AWG, max.	AWG 12
Reference to approval values	Specifications are maximum values, details - see approval certificate.		

Packing

Packaging	Box	VPE length	350 mm
VPE width	136 mm	VPE height	39 mm

Type tests

Test: Durability of markings	Standard	IEC 61984 section 6.2 and 7.3.2 / 10.08 taking pattern from IEC 60068-2-70 / 12.95
	Test	mark of origin, type identification, pitch, type of material, date clock
	Evaluation	available
	Test	durability
	Evaluation	passed
Test: Misengagement (Non-interchangeability)	Standard	IEC 61984 section 6.3 and 6.9.1 / 10.08, IEC 60512-13-5 / 02.06
	Test	180° turned with coding elements
	Evaluation	passed
	Test	visual examination
	Evaluation	passed

BLF 5.00HC/22/180 SN OR BX

Weidmüller Interface GmbH & Co. KG
Klingenbergstraße 26
D-32758 Detmold
Germany

www.weidmueller.com

Technical data

Test: Clampable cross section	Standard	IEC 60999-1 section 7 and 9.1 / 11.99, IEC 60947-1 section 8.2.4.5.1 / 06.07	
	Conductor type	Type of conductor and conductor cross-section	solid 0.2 mm²
		Type of conductor and conductor cross-section	stranded 0.2 mm²
		Type of conductor and conductor cross-section	solid 2.5 mm²
		Type of conductor and conductor cross-section	stranded 2.5 mm²
		Type of conductor and conductor cross-section	AWG 26/1
		Type of conductor and conductor cross-section	AWG 26/19
		Type of conductor and conductor cross-section	AWG 14/1
		Type of conductor and conductor cross-section	AWG 14/19
	Evaluation	passed	
Test for damage to and accidental loosening of conductors	Standard	IEC 60999-1 section 9.4 / 11.99	
	Requirement	0.2 kg	
	Conductor type	Type of conductor and conductor cross-section	AWG 26/1
		Type of conductor and conductor cross-section	AWG 26/19
	Evaluation	passed	
	Requirement	0.3 kg	
	Conductor type	Type of conductor and conductor cross-section	H05V-U0.5
		Type of conductor and conductor cross-section	H05V-K0.5
	Evaluation	passed	
	Requirement	0.7 kg	
	Conductor type	Type of conductor and conductor cross-section	H07V-U2.5
		Type of conductor and conductor cross-section	H07V-K2.5
		Type of conductor and conductor cross-section	AWG 14/1
		Type of conductor and conductor cross-section	AWG 14/19
	Evaluation	passed	

BLF 5.00HC/22/180 SN OR BX

Weidmüller Interface GmbH & Co. KG
Klingenbergstraße 26
D-32758 Detmold
Germany

www.weidmueller.com

Technical data

Pull-out test	Standard	IEC 60999-1 section 9.5 / 11.99	
	Requirement	≥10 N	
	Conductor type	Type of conductor and conductor cross-section	AWG 26/1
		Type of conductor and conductor cross-section	AWG 26/19
	Evaluation	passed	
	Requirement	≥20 N	
	Conductor type	Type of conductor and conductor cross-section	H05V-U0.5
		Type of conductor and conductor cross-section	H05V-K0.5
	Evaluation	passed	
	Requirement	≥50 N	
	Conductor type	Type of conductor and conductor cross-section	H07V-U2.5
		Type of conductor and conductor cross-section	H07V-K2.5
		Type of conductor and conductor cross-section	AWG 14/1
		Type of conductor and conductor cross-section	AWG 14/19
	Evaluation	passed	

Classifications

ETIM 6.0	EC002638	ETIM 7.0	EC002638
ETIM 8.0	EC002638	ETIM 9.0	EC002638
ECLASS 9.0	27-44-03-09	ECLASS 9.1	27-44-03-09
ECLASS 10.0	27-44-03-09	ECLASS 11.0	27-46-02-02
ECLASS 12.0	27-46-02-02	ECLASS 13.0	27-46-02-02
ECLASS 14.0	27-46-02-02		

Environmental Product Compliance

REACH SVHC	/
RoHS Compliance Status	Compliant without exemption

BLF 5.00HC/22/180 SN OR BX

Weidmüller Interface GmbH & Co. KG
Klingenbergstraße 26
D-32758 Detmold
Germany

www.weidmueller.com

Technical data

Important note

IPC conformity	Conformity: The products are developed, manufactured and delivered according international recognized standards and norms and comply with the assured properties in the data sheet resp. fulfill decorative properties in accordance with IPC-A-610 "Class 2". Further claims on the products can be evaluated on request.
Notes	• Additional variants on request • Gold-plated contact surfaces on request • Rated current related to rated cross-section & min. No. of poles. • Wire end ferrule without plastic collar to DIN 46228/1 • Wire end ferrule with plastic collar to DIN 46228/4 • P on drawing = pitch • Crimping shape "A" for wire end ferrules with PZ 6/5 crimping tool recommended. • The test point can only be used as potential-pickup point. • In accordance with IEC 61984, OMNIMATE-connectors are connectors without breaking capacity (COC). During designated use, connectors are not allowed to be engaged or disengaged when live or under load • Long term storage of the product with average temperature of 50 °C and maximum humidity 70%, 36 months

Approvals

Approvals	
ROHS	Conform
UL File Number Search	UL Website
Certificate No. (cURus)	E60693

Downloads

Approval/Certificate/Document of Conformity	Declaration of the Manufacturer
Engineering Data	CAD data – STEP
Catalogues	Catalogues in PDF-format
Brochures	FL DRIVES EN MB DEVICE MANUF. EN FL DRIVES DE FL BUILDING SAFETY EN FL APPL LED LIGHTING EN FL INDUSTR.CONTROLS EN FL MACHINE SAFETY EN FL HEATING ELECTR EN FL APPL_INVERTER EN FL_BASE_STATION_EN FL ELEVATOR EN FL POWER SUPPLY EN FL 72H SAMPLE SER EN PO OMNIMATE EN

BLF 5.00HC/22/180 SN OR BX

Weidmüller Interface GmbH & Co. KG
Klingenbergstraße 26
D-32758 Detmold
Germany

www.weidmueller.com

Drawings

Product image

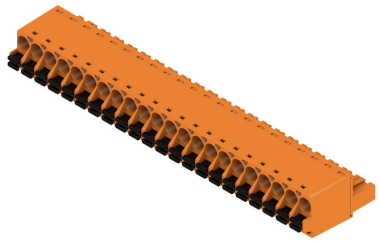

Dimensional drawing

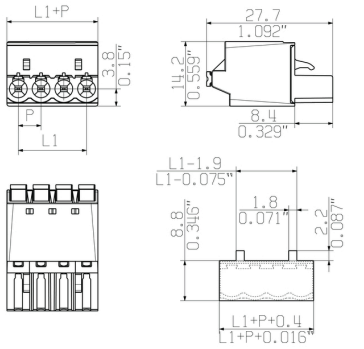

MIN. FRONT PLATE CUT-OUT

Graph

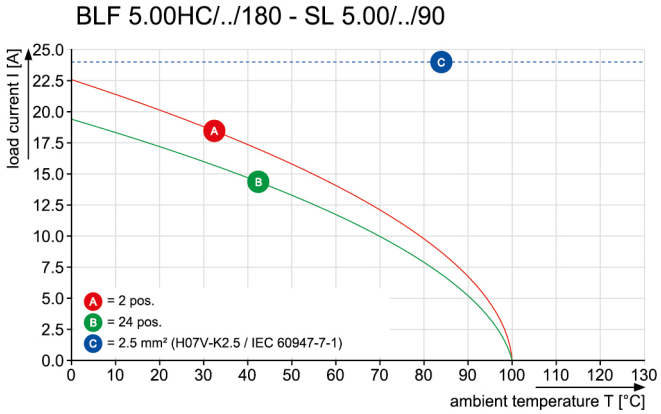

Graph

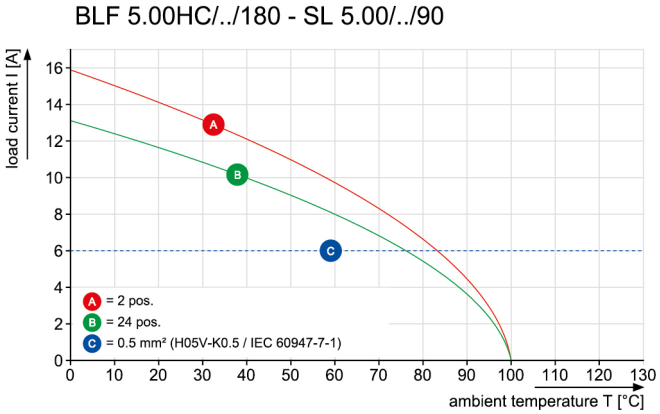

Uncompromising functionality
High vibration resistance

Product benefits



Uncompromising functionality
High vibration resistance

Product benefits



Solid PUSH IN contact
Safe and durable

BLF 5.00HC/22/180 SN OR BX

Weidmüller Interface GmbH & Co. KG
Klingenbergstraße 26
D-32758 Detmold
Germany

www.weidmueller.com

Drawings

Product benefits



Cost-effective wiring
Quick and intuitive operation

Product benefits



Wide clamping range
Tool-free wire connection

SHOWN: BLF 5.00HC/04/180

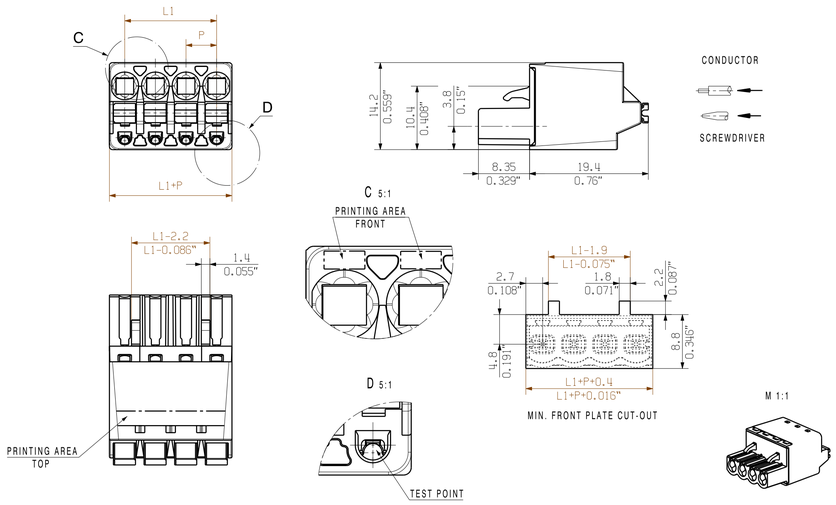

SHOWN: BLF 5.00HC/04/180LR

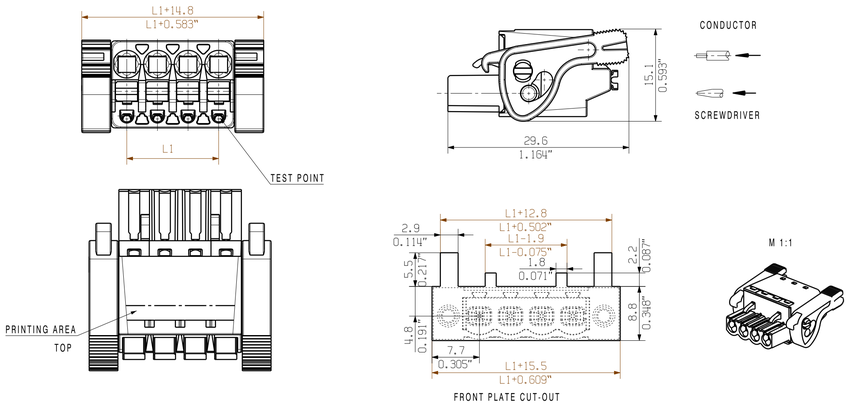

SHOWN: BLF 5.00HC/04/180LH

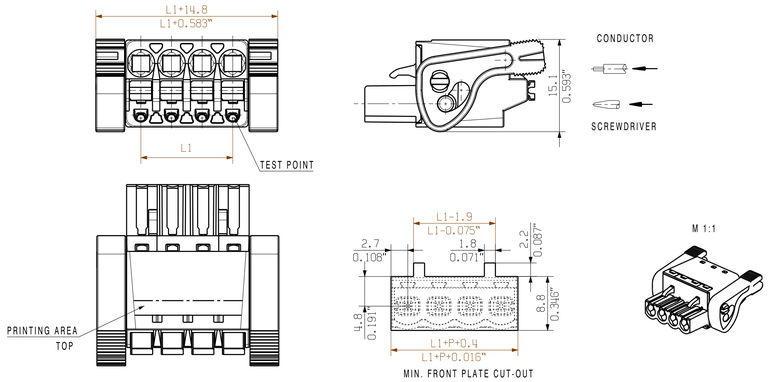

SHOWN: BLF 5.00HC/04/180F

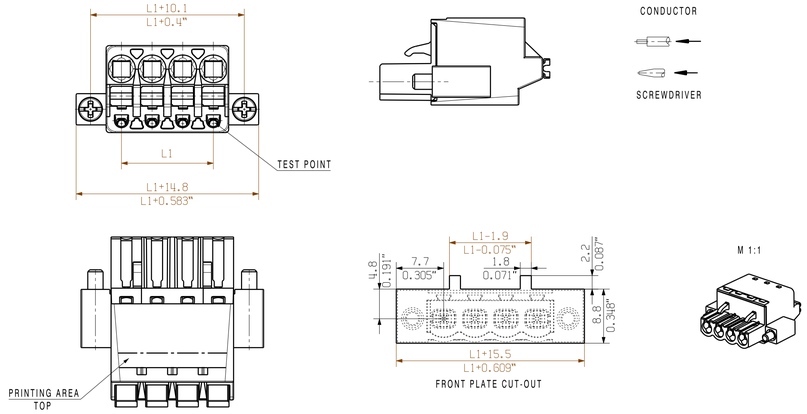

SONDERVARIALNTE OHNE RASTHAKEN / SPECIAL VERSION WITHOUT SNAP LATCH

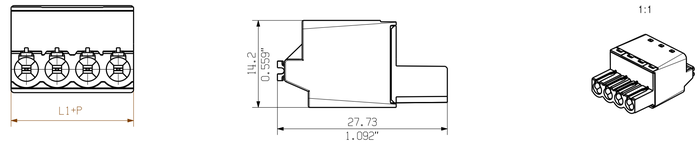

BLF 5.00HC/04/180F SO

SONDERVARIANTE / EINSEITIGER FLANSCH / SPECIAL VERSION ONESIDED FLANSH

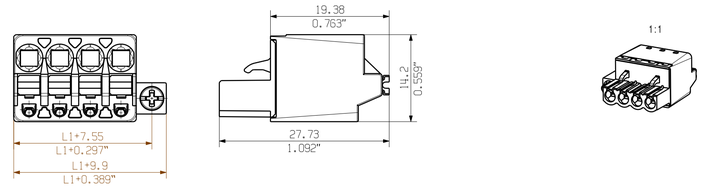

24	115	4.527
23	110	4.330
22	105	4.130
21	100	3.930
20	95	3.740
19	90	3.543
18	85	3.349
17	80	3.152
16	75	2.955
15	70	2.758
14	65	2.561
13	60	2.364
12	55	2.167
11	50	1.970
10	45	1.773
9	40	1.576
8	35	1.379
7	30	1.182
6	25	0.985
5	20	0.788
4	15	0.591
3	10	0.394
2	5	0.197
n	L1 [mm]	L1 [Inch]

P = 5.08 RASTER/PITCH

n = POLZAHL/NO OF POLES

For the mounting of PCBs, it should be noted that the rated data given in the catalogue relates only to the connection elements. The necessary creepage and clearance paths must be observed in connection with the respective applicant in accordance to VDE 0110. The current-carrying capacity and pitch tolerance is to be determined according to IEC 60326 part 3 very fine.

Weidmueller connectors are tested to the DIN VDE 0627 standard, and are valid for its field of application. Provided that the connectors are used to the intended purpose, all requirements with respect to the occuring of electrical, mechanical, thermic and corrosive stress will be satisfied.

General tolerance: DIN ISO 2768-mK

RoHS compliant

		. .	Cat.no.: .
99266/0 14.02.18 HERTEL_S	01	Weidmüller	1 43920 (07)
Modification			Drawing no. / Issue no.
			Sheet 01 of 01 sheets

	Date	Name
Drawn	28.04.2009	HECKERT_M
Responsible		HERTEL_S
Checked	26.02.2018	HELIS_MA
Approved		LANG_T

BLF 5.00HC/../180...
BUCHSENSTECKER
FEMALE PLUG

Scale: 2/1

Supersedes: .

Product file: BLF 5.00 7379

The reproduction, distribution and utilization of this document as well as the communication of its contents to others without explicit authorization is prohibited. Offenders will be held liable for the payment of damages. Weidmueller exclusively reserves the right to file for patents, utility models or designs.
© Weidmueller Interface GmbH & Co. KG