DRW270048LT

Weidmüller Interface GmbH & Co. KG
Klingenbergstraße 26
D-32758 Detmold
Germany

www.weidmueller.com

Product image



Similar to illustration

Individual relays within the D-SERIES DRW
- 2 CO contacts
- Optional AC or DC coils
- With test button and Integrated status LED

General ordering data

Version	D-SERIES DRW / DRH, Relay, Number of contacts: 2, CO contact AgCdO, Rated control voltage: 48 V DC, Continuous current: 16 A, Flat blade connections (4.8 mm x 0.5 mm), Test button available: Yes
Order No.	1219750000
Type	DRW270048LT
GTIN (EAN)	4032248998715
Qty.	10 pc(s).
Delivery status	This article will no longer be available in the future.
Available until	2021-04-30
Alternative product	2765210000

Creation date January 22, 2022 12:24:58 AM CET

DRW270048LT

Weidmüller Interface GmbH & Co. KG
Klingenbergstraße 26
D-32758 Detmold
Germany

www.weidmueller.com

Technical data

Dimensions and weights

Depth	48 mm	Depth (inches)	1.89 inch
Height	36 mm	Height (inches)	1.417 inch
Width	36 mm	Width (inches)	1.417 inch
Net weight	80.8 g		

Temperatures

Storage temperature	-40 °C...60 °C	Operating temperature	-40 °C...60 °C
Humidity	35 % to 85 % relative humidity level		

Environmental Product Compliance

REACH SVHC	Lead 7439-92-1

Rated data UL

Certificate No. (cURus)	E312083

Control side

Rated control voltage	48 V DC	Rated current DC	30 mA
Power rating	1.5 W	Pull-in/drop-out voltage, typ.	36 V / 4.8 V DC
Coil resistance	1600 Ω ± 10 %	Status indicator	Green LED

Load side

Rated switching voltage	400 V AC	Continuous current	16 A
Max. switching frequency at rated load	0.1 Hz	Max. switching voltage, DC	250 V
Min. switching power	100 mA @ 12 V	Inrush current	80 A / 50 ms
AC switching capacity (resistive), max.	6400 VA	DC switching capacity (resistive), max.	384 W @ 24 V
Switch-on delay	≤ 20 ms	Switch-off delay	≤ 20 ms
Contact type	2 CO contact (AgCdO)	Mechanical service life	10 x 10^6 switching cycles

General data

Test button available	Yes	
Mechanical switch position indicator	Yes	
Colour	Transparent	
UL94 flammability rating component	Component	Relay test button
	UL94 flammability rating	HB
	Component	Relay status indicator
	UL94 flammability rating	HB
	Component	Relay baseplate
	UL94 flammability rating	V-0
	Component	Relay cover
	UL94 flammability rating	V-2

DRW270048LT

Weidmüller Interface GmbH & Co. KG
Klingenbergstraße 26
D-32758 Detmold
Germany

www.weidmueller.com

Technical data

Insulation coordination

Insulation coordination according to	EN 61810-1:2008	Rated voltage	400 V
Pollution severity	3	Surge voltage category	III
Insulating material group	IIIa	Clearance and creepage distances for control side - load side	≥ 6,3 mm
Dielectric strength for control side - load side	2.5 kV_{eff} / 1 Min.	Dielectric strength of neighbouring contacts	1.5 kV_{eff} /1 min.
Dielectric strength of open contact	2.5 kV_{eff} / 1 Min.	Protection degree	IP20

Further details of approvals / standards

Standards	IEC 61810-1, EN 60664-1:2007, EN 61000-6-2:2005, EN 61000-6-4:2007 + A1:2011, UL 508	Certificate No. (cURus)	E312083

Connection data

Wire connection method	Flat blade connections (4.8 mm x 0.5 mm)

Classifications

ETIM 6.0	EC001437	ETIM 7.0	EC001437
ETIM 8.0	EC001437	ECLASS 9.0	27-37-16-01
ECLASS 9.1	27-37-16-01	ECLASS 10.0	27-37-16-01
ECLASS 11.0	27-37-16-01		

Important note

Product information	This article uses an exemption named in Annex III of the RoHS Directive 2011/65/EU "8b - Cadmium and cadmium compounds in electrical contacts", which could only be valid until 21.07.2021, depending on the product category. Please check whether you can use this article depending on the place of marketing and the product category concerned. Alternative product with modified contact material:

Approvals

Approvals	
ROHS	Conform
UL File Number Search	E312083

Downloads

Engineering Data	CAD data – STEP
Engineering Data	EPLAN, WSCAD
Product Change Notification	Product Change Notification - Deutsch Product Change Notification - English
Catalogues	Catalogues in PDF-format
Brochures	

DRW270048LT

Weidmüller Interface GmbH & Co. KG
Klingenbergstraße 26
D-32758 Detmold
Germany

www.weidmueller.com

Drawings

Wiring diagram

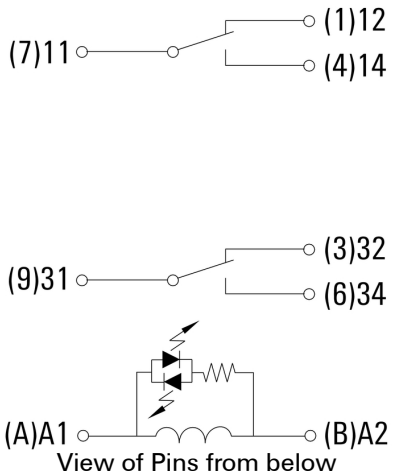

View of Pins from below

Graph

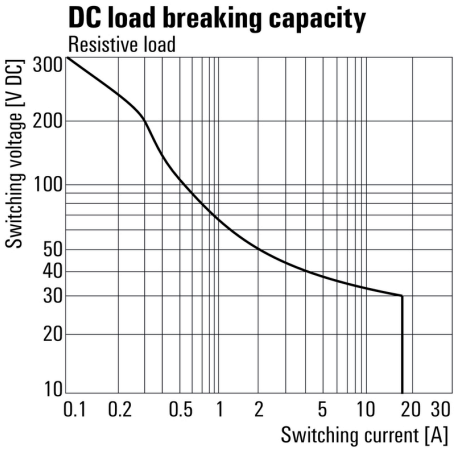

DC load limit curve
Resistive load

Graph

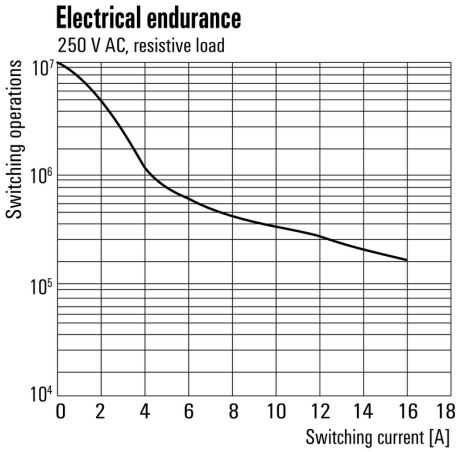

Electrical service life
Resistive load

Graph

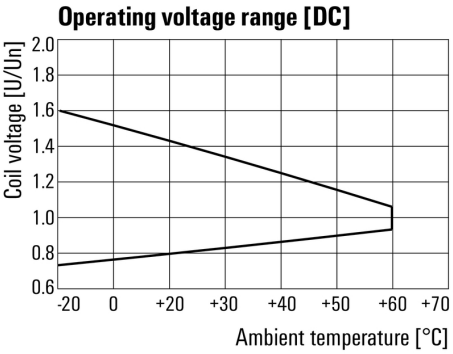

DC operational voltage range

Dimensional drawing

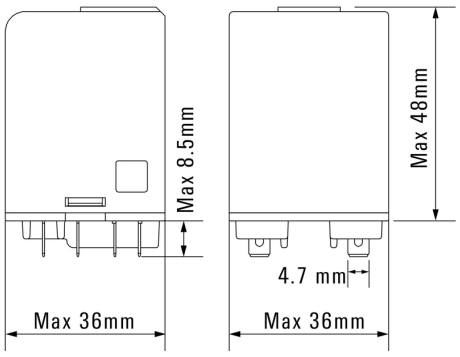

DRW270048LT

Weidmüller Interface GmbH & Co. KG
Klingenbergstraße 26
D-32758 Detmold
Germany

www.weidmueller.com

Accessories

Blank



ESG is the tried-and-tested marker in MultiCard format for use on many well-known electrical devices. The result is high-quality device marking with a high-contrast appearance.
Various types are available for devices from manufacturers like Siemens, ABB, Beckhoff etc.
Advantages at a glance:
- Tags for universal usage, self-adhesive or clip-on tags, depending on type
- For aligned equipment, e.g. circuit breakers, we supply ESG markers for clipping onto tag rails
- Individual laser-quality printing according to specifications

For custom printing: Please send us a file of our labeling software M-Print PRO or M-Print PRO Online (without installation) for your labeling specifications.

General ordering data

Type	ESG 6/15 K MC NE GE	Version
Order No.	1880130000	ESG, Device markers x 15 mm, PA 66, Colour: yellow, Self-adhesive
GTIN (EAN)	4032248478910	
Qty.	200 pc(s).	

Type	ESG 6/15 K MC NE WS	Version
Order No.	1880100000	ESG, Device markers x 15 mm, PA 66, Colour: white, Self-adhesive
GTIN (EAN)	4032248478781	
Qty.	200 pc(s).	

Protection modules



Pluggable protective modules for the D-SERIES relay sockets, with optional protective functions.
- With free-wheeling diode or RC filter

General ordering data

Type	RIM 5 6/230VDC	Version
Order No.	1174650000	D-SERIES, Free-wheeling diode, Rated control voltage: 6...230 V DC,
GTIN (EAN)	4032248971305	Plug-in connection
Qty.	10 pc(s).	

DRW270048LT

Weidmüller Interface GmbH & Co. KG
Klingenbergstraße 26
D-32758 Detmold
Germany

www.weidmueller.com

Accessories

Test button cover

Test button cover for the D-SERIES DRW/DRH relays.

General ordering data

Type	TEST LEVER BLOCK DRH/DRW	Version
Order No.	7760056249	D-SERIES DRW / DRH, Test button cover
GTIN (EAN)	6944169641626	
Qty.	10 pc(s).	

ESG 6/17



Guaranteed long service life: ESG
The multi-colour and multi-format labels have a strong adhesive layer to ensure the best possible adhesion to the underlying surface. Double laminated polyester makes the basic material very thin and yet extremely tear-resistant.
Your benefits with MultiMark
- “Different materials for various requirements”
- Can be used with equipment from many manufacturers
- Device markers with a familiar design

General ordering data

Type	ESG 6/17 MM WS	Version
Order No.	2005100000	ESG, Device markers, 6 x 17 mm, white
GTIN (EAN)	4050118390728	
Qty.	3,000 pc(s).	

DRW270048LT

Weidmüller Interface GmbH & Co. KG
Klingenbergstraße 26
D-32758 Detmold
Germany

www.weidmueller.com

Accessories

Retaining clips



Retaining clip for D-SERIES DRW/DRH relays
- Metal retaining clip

General ordering data

Type	DRW/DRH CLIP M	Version
Order No.	1220260000	D-SERIES DRW / DRH, Retaining clip
GTIN (EAN)	4032248999576	
Qty.	10 pc(s).	

Blank, adhesive backing



SM is a MultiCard marker for labelling control and signalling devices. The tags are clipped into the carriers or attached by means of the adhesive film already fitted to them. Customised tags can be created with the PrintJet CONNECT or Plotter marking systems.
- Users can quickly produce tags to suit their needs
- No need to stock expensive standard tags
- Highly resistant printing quality when using the PrintJet as a substitute for engraving
- For extreme demands, we recommend the ETO SM protective film
- Holders can be used for the 22-mm or 30-mm-diameter push-buttons from Siemens, ABB, Moeller and Télémécanique

For custom printing: Please send us a file of our labeling software M-Print PRO or M-Print PRO Online (without installation) for your labeling specifications.

General ordering data

Type	SM 18/9.5 K MC NE WS	Version
Order No.	1248580000	SwitchMark, Device markers, 9.5 x 18 mm, white
GTIN (EAN)	4050118038965	
Qty.	200 pc(s).	
Type	SM 18/9.5 K MC NE GE	Version
Order No.	1248590000	SwitchMark, Device markers, 9.5 x 18 mm, Siemens 3 SB, yellow
GTIN (EAN)	4050118038958	
Qty.	200 pc(s).	

DRW270048LT

Weidmüller Interface GmbH & Co. KG
Klingenbergstraße 26
D-32758 Detmold
Germany

www.weidmueller.com

Accessories

Type	SM 18/9.5 K MC NE GR	Version
Order No.	1248610000	SwitchMark, Device markers, 9.5 x 18 mm, grey
GTIN (EAN)	4050118038675	
Qty.	200 pc(s).	

Blank



ESG is the tried-and-tested marker in MultiCard format for use on many well-known electrical devices. The result is high-quality device marking with a high-contrast appearance.
Various types are available for devices from manufacturers like Siemens, ABB, Beckhoff etc.
Advantages at a glance:
- Tags for universal usage, self-adhesive or clip-on tags, depending on type
- For aligned equipment, e.g. circuit breakers, we supply ESG markers for clipping onto tag rails
- Individual laser-quality printing according to specifications

For custom printing: Please send us a file of our labeling software M-Print PRO or M-Print PRO Online (without installation) for your labeling specifications.

General ordering data

Type	ESG 9/11 K MC NE WS	Version
Order No.	1857440000	ESG, Device markers x 11 mm, PA 66, Colour: white, Self-adhesive
GTIN (EAN)	4032248402731	
Qty.	200 pc(s).	

Sockets



Relay sockets for the D-SERIES DRW/DRH relays
- Up to 3 CO contacts
- Screw connection

General ordering data

Type	SPW ECO 3CO	Version
Order No.	1220250000	D-SERIES DRW / DRH, Relay socket, Number of contacts: 3, CO
GTIN (EAN)	4032248100101	contact, Continuous current: 16 A, Screw connection
Qty.	10 pc(s).	

DRW270048LT

Weidmüller Interface GmbH & Co. KG
Klingenbergstraße 26
D-32758 Detmold
Germany

www.weidmueller.com

Accessories

Blank



ESG is the tried-and-tested marker in MultiCard format for use on many well-known electrical devices. The result is high-quality device marking with a high-contrast appearance.
Various types are available for devices from manufacturers like Siemens, ABB, Beckhoff etc.
Advantages at a glance:

- Tags for universal usage, self-adhesive or clip-on tags, depending on type
- For aligned equipment, e.g. circuit breakers, we supply ESG markers for clipping onto tag rails
- Individual laser-quality printing according to specifications

For custom printing: Please send us a file of our labeling software M-Print PRO or M-Print PRO Online (without installation) for your labeling specifications.

General ordering data

Type	ESG 6/17 K MC NE GE	Version
Order No.	1880110000	ESG, Device markers x 17 mm, PA 66, Colour: yellow, Self-adhesive
GTIN (EAN)	4032248478798	
Qty.	200 pc(s).	
Type	ESG 6/17 K MC NE WS	Version
Order No.	1880120000	ESG, Device markers x 17 mm, PA 66, Colour: white, Self-adhesive
GTIN (EAN)	4032248478804	
Qty.	200 pc(s).	

DRW270048LT

Weidmüller Interface GmbH & Co. KG
Klingenbergstraße 26
D-32758 Detmold
Germany

www.weidmueller.com

Drawings

Miscellaneous

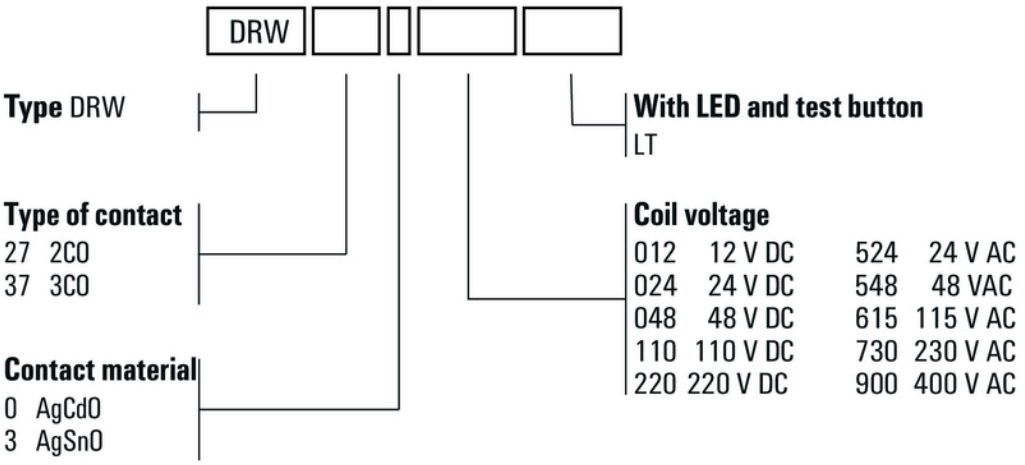

Type codes