VSSC6TRSL24VAC/DC0.5A

Weidmüller Interface GmbH & Co. KG
Klingenbergstraße 26
D-32758 Detmold
Germany

www.weidmueller.com

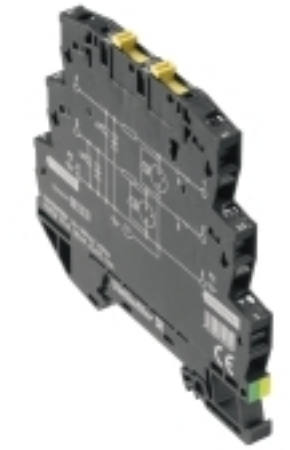

Similar to illustration

Overvoltage coupling along the conductor path may disturb or destroy sensitive signal inputs. It is important to provide protection in the immediate vicinity of I&C devices. Weidmüller's broad product range for the I&C sector offers products in a 2-piece, pluggable design and modular terminals for tension clamp or screw connection. These products are suitable for both binary and analogue signals. Weidmüller also offers other designs with integrated components such as gas discharge tubes or varistors. VARITECTOR stands for flexible and variable surge protection by Weidmüller, tested according to product standard IEC61643-21. The VARITECTOR series can be used in applications according to IEC 61643-22 / VDE 0845-3 for classes C1, C2, C3 and D1. The VARITECTOR SPC, SSC and MCZ OVP product families optimally combine electrical and mechanical properties. Size and easy handling play an important role. This surge protection is suited for confined spaces in industrial and process automation as well as in building automation applications.

General ordering data

Version	Surge protection for instrumentation and control, Surge protection for measurement and control, U_P(L/N-PE) 150 V
Order No.	1354790000
Type	VSSC6TRSL24VAC/DC0.5A
GTIN (EAN)	4050118156744
Qty.	10 pc(s).

VSSC6TRSL24VAC/DC0.5A

Weidmüller Interface GmbH & Co. KG
Klingenbergstraße 26
D-32758 Detmold
Germany

www.weidmueller.com

Technical data

Dimensions and weights

Depth	81 mm	Depth (inches)	3.189 inch
Height	88.5 mm	Height (inches)	3.484 inch
Width	6.2 mm	Width (inches)	0.244 inch
Net weight	47 g		

Temperatures

Storage temperature	-40 °C...80 °C	Operating temperature	-40 °C...70 °C
Humidity	5...96 %		

Probability of failure

SIL PAPER	SIL PAPER	SIL in compliance with IEC 61508	3
MTTF	1,358 Jahre	SFF	96.67 %
λges	54	PFH in $1*10^{-9}$ per hour	1.8

Environmental Product Compliance

REACH SVHC	Lead 7439-92-1	SCIP	71e97bb7-979f-4330-94c0-20c629b

Rated data UL

Certificate No. (UL)	E311081	UL certificate	UL Zertifikat

CSA protection data

Gas group C	IIB	Gas group D	IIA
Gas groups A, B	IIC	Input current, max. I_I	500 mA
Input voltage, max. U_i	42 V	Internal capacity, max. C_I	2 nF
Internal inductance, max. L_I	0 µH		

General data

Colour	black	Design	Terminal
Isolating function	Yes	Operating altitude	≤ 2000 m
Optical function display	No	Protection degree	IP20
Rail	TS 35	Segment	Measurement - Monitoring - Setting
Testing option	Functional screw with test plug receptacle, connections 1, 2, 4, 5	UL 94 flammability rating	V-0
Version	Surge protection for measurement and control		

Insulation coordination acc. to EN 50178

Pollution severity	2	Surge voltage category	III

VSSC6TRSL24VAC/DC0.5A

Weidmüller Interface GmbH & Co. KG
Klingenbergstraße 26
D-32758 Detmold
Germany

www.weidmueller.com

Technical data

Rated data IEC / EN

Discharge current I_{max} (8/20µs) wire-PE	10 kA	Discharge current I_n (8/20µs) wire-PE	2.5 kA
Discharge current, max. (8/20 µs)	20 kA	Fuse	0.5 A
Insertion loss	3.12 Mhz	Leakage current at U_n	2.8 mA
Lightning test current I_{imp} (10/350 µs)	1 kA	Lightning test current, I_{imp} (10/350 µs) Wire–PE	1 kA
Max. continuous voltage, Uc (AC)	30 V	Max. continuous voltage, Uc (DC)	42 V
Number of poles	1	Overload - failure mode	Modus 2
Protection level U_P (typ.)	150 V	Protection level U_P for C1 with 500V/250A (wire-PE)	60 V
Protection level U_P for C1 with 500V/250A (wire-wire)	116 V	Protection level U_P for C2 with 10kV/5kA (wire-PE)	108 V
Protection level U_P for C2 with 10kV/5kA (wire-wire)	204 V	Protection level U_P for C3 with 1kV/µs (wire-PE)	55 V
Protection level U_P for C3 with 1kV/µs (wire-wire)	106 V	Protection level U_P for D1 with 0.5kA (wire-wire)	194 V
Pulse-reset capacity	≤ 20 ms	Rated current I_N	500 mA
Rated voltage (AC)	24 V	Rated voltage (DC)	34 V
Requirements category acc. to IEC 61643-21	C2, C3, D1	Signal transmission properties (-3 dB)	3.2 MHz
Standards	IEC 61643-21	Surge current-carrying capacity C2	2.5 kA 8/20 µs 5 kV 1.2/50 µs
Surge current-carrying capacity C3	10 A 10/1000 µs	Surge current-carrying capacity D1	1 kA 10/350 µs
Voltage type	AC/DC	Volume resistance	1.8 Ω 10 %

Further details of approvals

GOST certificate	GOST-Zertifikat

Connection data

Type of connection	Screw connection	Tightening torque, min.	0.5 Nm
Tightening torque, max.	0.8 Nm	Clamping range, min.	0.5 mm²
Clamping range, max.	4 mm²	Wire cross-section, solid, min.	0.5 mm²
Wire cross-section, solid, max.	6 mm²	Conductor cross-section, flexible, AEH (DIN 46228-1), min.	0.5 mm²
Conductor cross-section, flexible, AEH (DIN 46228-1), max.	4 mm²	Connection cross-section, stranded, min.	0.5 mm²
Connection cross-section, stranded, max.	4 mm²		

Ratings IECEx/ATEX/cUL

cUL certificate	cUL Certificate

Classifications

ETIM 6.0	EC000943	ETIM 7.0	EC000943
ETIM 8.0	EC000943	ECLASS 9.0	27-13-08-07
ECLASS 9.1	27-13-08-07	ECLASS 10.0	27-13-08-07
ECLASS 11.0	27-13-08-07	ECLASS 12.0	27-17-90-90

VSSC6TRSL24VAC/DC0.5A

Weidmüller Interface GmbH & Co. KG
Klingenbergstraße 26
D-32758 Detmold
Germany

www.weidmueller.com

Technical data

Tender specification sheets

Long specification	Surge protection in a one piece, 6.2 mm wide DIN rail module for two binary, potential-free signal circuits with 24 V UC. Each signal path can be opened using an isolator. Signal indication via a green LED. When the terminal is fitted, a simultaneous electrically conducting contact is made between the mounting rail (earth) and the reference potential (ground) of the protection circuit in the terminal. Optical identification of the terminal based on the type of protected switching and the voltage level. The terminal can be labelled or marked.	Short specification	Surge protection in a one piece, 6.2 mm wide DIN rail module for two binary, potential-free signal circuits. Each signal path can be opened using an isolator. Signal indication via a green LED. Version: 24V UC

Important note

Product information	Mode 2: State where the voltage-limiting part of the SPD was short-circuited due to a very low impedance within the SPD. The line is inoperable, but the measuring equipment is still protected by means of a short-circuit.

Approvals

Approvals	
ROHS	Conform
UL File Number Search	UL Website
Certificate No. (UL)	E311081

Downloads

Approval/Certificate/Document of Conformity	SIL Paper EU_Konformitätserklärung / EU_Declaration_of_Conformity
Engineering Data	CAD data – STEP
Engineering Data	EPLAN, WSCAD
User Documentation	Beipackzettel / Instruction sheet
Catalogues	Catalogues in PDF-format
Brochures	

VSSC6TRSL24VAC/DC0.5A

Weidmüller Interface GmbH & Co. KG
Klingenbergstraße 26
D-32758 Detmold
Germany

www.weidmueller.com

Drawings

Similar to illustration

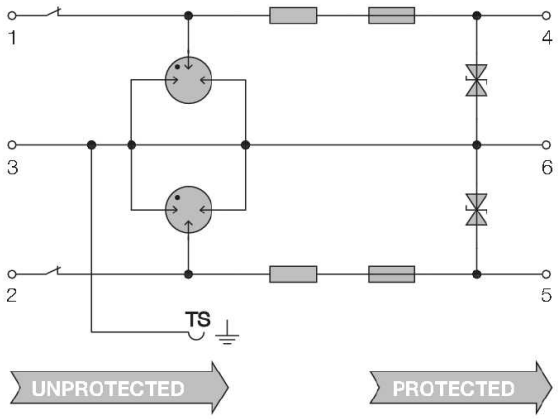

Circuit diagram