DRMKIT 24VDC 4CO LD/PB

Weidmüller Interface GmbH & Co. KG
Klingenbergstraße 26
D-32758 Detmold
Germany

www.weidmueller.com

Product image



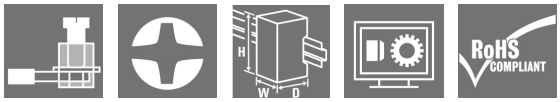

- Mounted kit consisting relay, socket and retaining clip
- 100 % function tested
- 100 % check of the dielectric strenght between input - output
- 4 CO contacts
- With mechanical status indicator
- Optional Test button with coloured identification of coils (AC red / DC blue)
- Bright status LED (AC coil: red / DC coil: green)

General ordering data

Version	D-SERIES DRM, Relay module, Number of contacts: 4, CO contact AgNi flash gold-plated, Rated control voltage: 24 V DC, Continuous current: 5 A, Screw connection, Test button available: Yes
Order No.	1542510000
Type	DRMKIT 24VDC 4CO LD/PB
GTIN (EAN)	4050118347302
Qty.	10 pc(s).
Relevant relay	7760056097
Relevant base	7760056264

Creation date September 16, 2022 7:05:18 AM CEST

DRMKIT 24VDC 4CO LD/PB

Weidmüller Interface GmbH & Co. KG
Klingenbergstraße 26
D-32758 Detmold
Germany

www.weidmueller.com

Technical data

Dimensions and weights

Depth	66.8 mm	Depth (inches)	2.63 inch
Height	79.9 mm	Height (inches)	3.146 inch
Width	27.2 mm	Width (inches)	1.071 inch
Net weight	93.35 g		

Temperatures

Storage temperature	-40 °C...70 °C	Operating temperature	-40 °C...60 °C

Environmental Product Compliance

REACH SVHC	Lead 7439-92-1	SCIP	611f3393-31e7-4ef5-8360-95619a6

Control side

Rated control voltage	24 V DC	Rated current DC	36.9 mA
Power rating	0.9 W	Pull-in/drop-out voltage, typ.	18 V / 2.4 V DC
Coil resistance	630 Ω ± 10 %	Coil tolerance	10 %
Status indicator	Green LED	Protective circuit	Free-wheeling diode

Load side

Rated switching voltage	250 V AC	Continuous current	5 A
Max. switching frequency at rated load	0.1 Hz	Inrush current	10 A / 50 ms
AC switching capacity (resistive), max.	1250 VA	DC switching capacity (resistive), max.	120 W @ 24 V
Switch-on delay	< 20 ms	Switch-off delay	< 20 ms
Contact type	4 CO contact (AgNi flash gold-plated)	Mechanical service life	20 x 10^6 switching cycles
Min. switching power	10 mA @ 12 V, 100 mA @ 5 V		

General data

Rail	TS 35	
Test button available	Yes	
Version of test button	Lockable test button, Momentary test button	
Mechanical switch position indicator	Yes	
Colour	black	
UL94 flammability rating component	Component	Housing
	UL94 flammability rating	V-2
	Component	Mounting foot
	UL94 flammability rating	HB
	Component	Retaining clip
	UL94 flammability rating	HB
	Component	Relay cover
	UL94 flammability rating	V-2
	Component	Relay baseplate
	UL94 flammability rating	V-0
	Component	Relay status indicator
	UL94 flammability rating	HB
	Component	Relay test button
	UL94 flammability rating	HB

DRMKIT 24VDC 4CO LD/PB

Weidmüller Interface GmbH & Co. KG
Klingenbergstraße 26
D-32758 Detmold
Germany

www.weidmueller.com

Technical data

Insulation coordination

Rated voltage	250 V	Pollution severity	2
Surge voltage category	III	Insulating material group	C
Clearance and creepage distances for control side - load side	≥ 5.5 mm	Dielectric strength for control side - load side	1.8 kV_{eff} / 1 min.
Dielectric strength of neighbouring contacts	1 kV_{eff} / 1 min	Dielectric strength of open contact	1 kV_{eff} / 1 min
Impulse withstand voltage	4.8 kV (1.2/50 µs)	Protection degree	IP20

Further details of approvals / standards

Certificate no. (cURus) relay	E312083	Certificate no. (cURus) base	E312083

Connection data

Wire connection method	Screw connection	Stripping length, rated connection	7 mm
Tightening torque, min.	0.5 Nm	Tightening torque, max.	0.7 Nm
Clamping range, min.	0.5 mm²	Clamping range, max.	2.5 mm²
Wire cross-section, solid, min.	0.5 mm²	Wire cross-section, solid, max.	2.5 mm²
Wire connection cross section, finely stranded, min.	0.5 mm²	Wire connection cross section, finely stranded, max.	2.5 mm²
Wire connection cross-section, finely stranded with wire-end ferrules DIN 46228/4, min.	0.5 mm²	Wire connection cross-section, finely stranded with wire-end ferrules DIN 46228/4, max.	2.5 mm²
Conductor cross-section, flexible, AEH (DIN 46228-1), min.	0.5 mm²	Conductor cross-section, flexible, AEH (DIN 46228-1), max.	2.5 mm²
Wire connection cross section, finely stranded, two clampable wires, min.	0.5 mm²	Wire cross-section, finely stranded, two clampable wires, max.	1 mm²
Blade size	size PH1		

Classifications

ETIM 6.0	EC001437	ETIM 7.0	EC001437
ETIM 8.0	EC001437	ECLASS 9.0	27-37-16-01
ECLASS 9.1	27-37-16-01	ECLASS 10.0	27-37-16-01
ECLASS 11.0	27-37-16-01	ECLASS 12.0	27-37-16-01

Approvals

Approvals	
ROHS	Conform

Downloads

Approval/Certificate/Document of Conformity	EU Konformitätserklärung / EU Declaration of Conformity
Engineering Data	CAD data – STEP
Engineering Data	EPLAN, WSCAD, Zuken E3.S
Catalogues	Catalogues in PDF-format

DRMKIT 24VDC 4CO LD/PB

Weidmüller Interface GmbH & Co. KG
Klingenbergstraße 26
D-32758 Detmold
Germany

www.weidmueller.com

Drawings

Wiring diagram

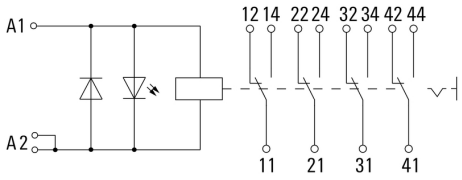

Graph

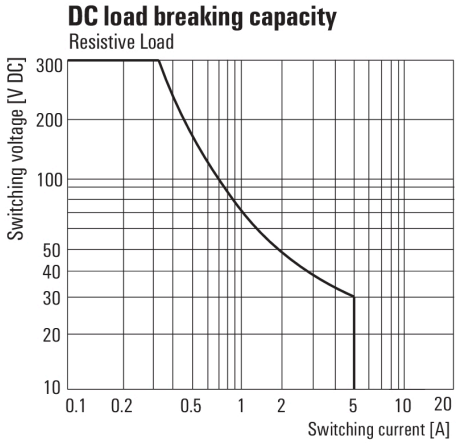

DC load limit curve
Resistive load

Graph

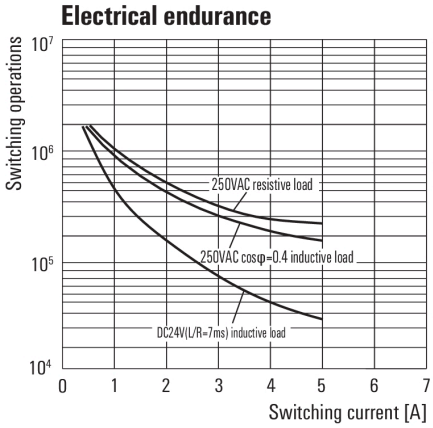

Electrical service life

Graph

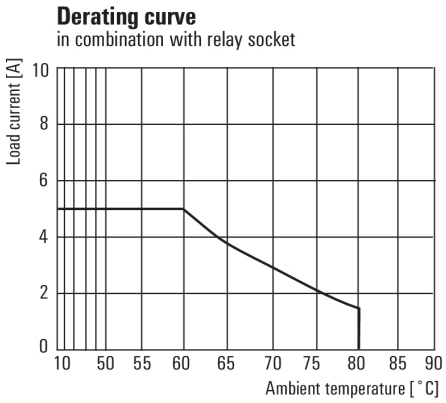

Derating curve

Graph

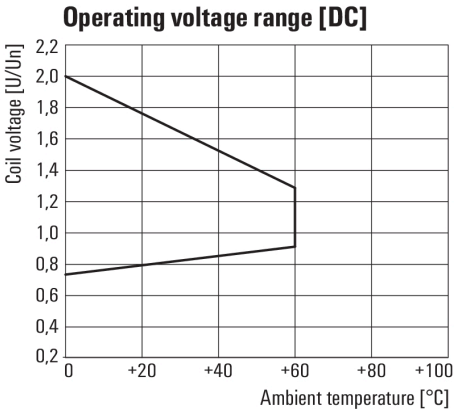

DC operational voltage range

Dimensional drawing

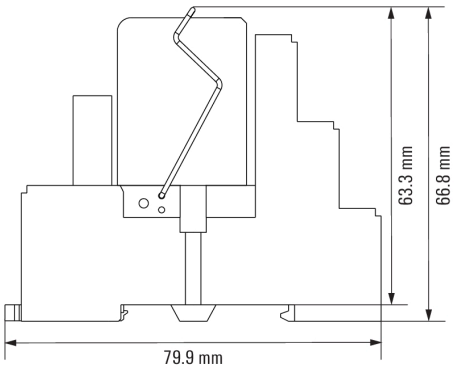

DRMKIT 24VDC 4CO LD/PB

Weidmüller Interface GmbH & Co. KG
Klingenbergstraße 26
D-32758 Detmold
Germany

www.weidmueller.com

Drawings

Miscellaneous

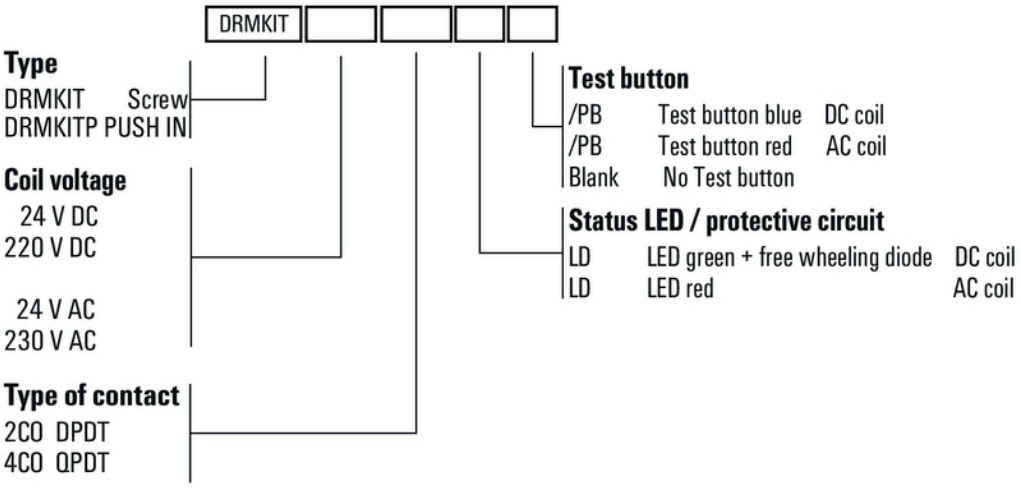

Type codes