KLIPPON K41 VMQ

Weidmüller Interface GmbH & Co. KG
Klingenbergstraße 26
D-32758 Detmold
Germany

www.weidmueller.com

Similar to illustration



The aluminium Klippon® K enclosures are suitable for use in an extremely wide range of different areas. Various components can be installed inside the enclosures, and will benefit in particular from the high temperature resistance, the excellent IP protection and the good impact resistance.
No matter what kind of application the customer is planning, Weidmüller is able to provide a wide range of aluminium enclosures precisely fitting the customer's requirements.
Klippon® K enclosures for hazardous areas are available on request.
Our extensive product range offers the following advantages:

- Available in two surface finishes: natural and powder-coated (RAL 7001)
- With chloroprene moulded seal as standard (silicone moulded seal optionally available)
- Standardised closure system with Torx slotted screw head for 19 enclosure sizes
- Mounting holes outside of the gasket area
- High IP protection classes: IP66, IP67 and IP68 according to DIN EN 60529
- Impact resistance of up to 7 (10) Joules
- The enclosures are approved according ATEX, IECEx, cULus, and DNV GL as well as the empty enclosure standard.
- Suitable for railway applications according to EN 45545-2:2013
- Alloy is resistant to salt water
- Standardised distributor enclosures with threaded holes and a variety of terminal configurations

General ordering data

Version	Klippon K (aluminium empty enclosure), Empty enclosure, Aluminium enclosure, Height: 120 mm, Width: 122 mm, Depth: 81 mm, Material: Aluminium AlSi12, untreated, silver
Order No.	1939640000
Type	KLIPPON K41 VMQ
GTIN (EAN)	4032248615971
Qty.	1 pc(s).
Unassembled to fit rail	1910070000

KLIPPON K41 VMQ

Weidmüller Interface GmbH & Co. KG
Klingenbergstraße 26
D-32758 Detmold
Germany

www.weidmueller.com

Technical data

Dimensions and weights

Depth	81 mm	Depth (inches)	3.189 inch
Height	120 mm	Height (inches)	4.724 inch
Width	122 mm	Width (inches)	4.803 inch
Mounting dimension - height	82 mm	Mounting dimension - width	106 mm
Net weight	916 g		

Temperatures

Operating temperature	-50 °C...135 °C

Cable glands, left

M12	4	M16	4
M20	2	M25	1
M32	1		

Cable glands, right

M12	4	M16	4
M20	2	M25	1
M32	1		

Cable glands, top/bottom

M12	6	M16	6
M20	3	M25	2
M32	1		

Certificate numbers enclosure

Approval conditions	cULus, RMRS, DNV	Certificate No. (DNV)	TAE00002SM
Certificate no. (cULus)	E197061	Declaration of Conformatiy No. (DoC LVD)	DE PS2410 160412 001ISS03

General information

Access opening: height	111 mm	Access opening: width	113 mm
Areas of use	Process industry, Transportation, Marine engineering, Packaging industry, Harbour facilities, Machine construction	Enclosure attachment	Holes 6 mm
Flange plate	No	Impact resistance	10 J version standard
Integral fixing	Threaded holes M5	Lid	Yes
Lid attachment	M6 torx stainless steel screws with slot	Material	Aluminium AlSi12
Material thickness of cover	4 mm	Material thickness of enclosure	4.5 mm
Max. payload	1.464 kg	Note: protection class	IP68 (t=72h, h=1m)
Number of lid screws	4	Operating temperature, max.	135 °C
Operating temperature, min.	-50 °C	Protection class (UL)	Type 4, Type 4X
Protection degree	IP66, IP67, IP68	Seal material	Silicone
Standards	EN 45545-2:2013	Surface finish	untreated
Torque for lid screws	2.5 Nm		

KLIPPON K41 VMQ

Weidmüller Interface GmbH & Co. KG
Klingenbergstraße 26
D-32758 Detmold
Germany

www.weidmueller.com

Technical data

horizontal assembly

WDU 10 / ZDU 10	1x6	WDU 2,5 / ZDU 2,5 / IDU 2,5	1x13
WDU 4 / ZDU 4	1x11	WDU 6 / ZDU 6	1x8

vertical assembly

WDU 2,5 / ZDU 2,5 / IDU 2,5	*

Classifications

ETIM 6.0	EC000261	ETIM 7.0	EC000261
ETIM 8.0	EC000261	ETIM 9.0	EC000261
ECLASS 9.0	27-18-01-01	ECLASS 9.1	27-18-92-90
ECLASS 10.0	27-18-01-01	ECLASS 11.0	27-18-01-01
ECLASS 12.0	27-18-01-01	ECLASS 13.0	27-18-01-01
ECLASS 14.0	27-18-01-01		

Environmental Product Compliance

RoHS Compliance Status	Compliant with exemption
RoHS Exemption (if applicable/known)	6bI
REACH SVHC	Lead 7439-92-1
SCIP	9e4cab4e-239c-4e14-b9df-a0fee300d28a

Approvals

Approvals	
ROHS	Conform
UL File Number Search	UL Website
Certificate no. (cULus)	E197061

Downloads

Approval/Certificate/Document of Conformity	TAE00002SM EU Declaration of Conformity - Klippon K Empty Enclosures - DoC DE PS2410 160412 001ISS03 UKCA Declaration of Conformity - Klippon K Empty Enclosures - UKCA DE PS2410 220623 001ISS00 DoM Klippon K salt water resistance DoM Klippon K EN 45545-2 2013 Railway
Engineering Data	CAD data – STEP
Product Change Notification	Technical change to Klippon K® enclosure series Technische Änderung für Klippon® K Gehäuse 20240315-PCN-Klippon K Enclosure Instruction
Tender specification	Klippon K41 VMQ_1939640000_DE Klippon K41 VMQ_1939640000_EN
User Documentation	Assembly guidelines - empty enclosures
Catalogues	Catalogues in PDF-format
Brochures	MB KLIPPON ENCL.TECN EN FL RAILWAY 2014 EN FL RAILWAY 2014 EN

KLIPPON K41 VMQ

Weidmüller Interface GmbH & Co. KG
Klingenbergstraße 26
D-32758 Detmold
Germany

www.weidmueller.com

Drawings

Dimensioned drawing

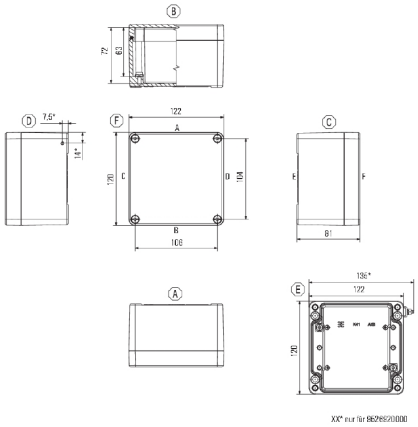

KLIPPON K41 VMQ

Weidmüller Interface GmbH & Co. KG
Klingenbergstraße 26
D-32758 Detmold
Germany

www.weidmueller.com

Accessories

Spacer



Stainless steel spacers in three lengths to increase the distance distance between the mounting rails or DIN rails and the rear wall of the enclosure.

General ordering data

Type	SP M6 30 MSZN	Version
Order No.	3896300000	Klippon EB (Essential Box), Spacer, Height: 11.2 mm, Width: 10 mm,
GTIN (EAN)	4008190850241	Depth: 30 mm, Material: Steel, silver
Qty.	2 pc(s).	
Type	SP M6 20 MSZN	Version
Order No.	3896200000	Klippon EB (Essential Box), Spacer, Height: 11.2 mm, Width: 10 mm,
GTIN (EAN)	4008190850234	Depth: 20 mm, Material: Steel, silver
Qty.	2 pc(s).	
Type	SP M6 15 MSZN	Version
Order No.	3896100000	Klippon EB (Essential Box), Spacer, Height: 11.2 mm, Width: 10 mm,
GTIN (EAN)	4008190857851	Depth: 15 mm, Material: Steel, silver
Qty.	2 pc(s).	

Klippon® K - Wall-mounted holder



The system accessories for the Klippon® K enclosure series allows you to easily adapt the enclosures to meet the specific requirements of every application.
- DIN Rails TS 35 and TS15
- Mounting plates
- Hinges
- Wall-mounted holder

General ordering data

Type	KLIPPON K MF KIT 25	Version
Order No.	9527590000	Klippon K (aluminium empty enclosure), Mounting foot, Fixing lugs,
GTIN (EAN)	4032248014071	Height: 70 mm, Width: 33.5 mm, Depth: 12 mm, Material: Stainless
Qty.	1 pc(s).	steel 1.4301, silver

KLIPPON K41 VMQ

Weidmüller Interface GmbH & Co. KG
Klingenbergstraße 26
D-32758 Detmold
Germany

www.weidmueller.com

Accessories

Klippon® K - Hinge



The system accessories for the Klippon® K enclosure series allows you to easily adapt the enclosures to meet the specific requirements of every application.
- DIN Rails TS 35 and TS15
- Mounting plates
- Hinges
- Wall-mounted holder

General ordering data

Type	HG K+POK	Version
Order No.	1580360000	Klippon POK (polyester empty enclosure), External joint, Hinge,
GTIN (EAN)	4008190203542	Material: Aluminium AlSi12, silver
Qty.	1 pc(s).	

TS 15



The system accessories for the Klippon® K enclosure series allows you to easily adapt the enclosures to meet the specific requirements of every application.
- DIN Rails TS 35 and TS15
- Mounting plates
- Hinges
- Wall-mounted holder

General ordering data

Type	TS15X5 ST K41	Version
Order No.	8898030000	Rail, TS 15, Width: 106 mm, with slot, Steel, galvanic zinc plated and
GTIN (EAN)	4032248648788	passivated
Qty.	20 pc(s).	

KLIPPON K41 VMQ

Weidmüller Interface GmbH & Co. KG
Klingenbergstraße 26
D-32758 Detmold
Germany

www.weidmueller.com

Accessories

Screws



Depending on the terminal block or also accessories, we offer different types of screws as additional items or also spare parts.

General ordering data

Type	FKSC M5X8 D9/SW2.5	Version
Order No.	0295900000	SAK Series, Allen hex screw, Screws, Number of poles: 1
GTIN (EAN)	4008190133337	
Qty.	50 pc(s).	

Klippon® K - Mounting plates



The system accessories for the Klippon® K enclosure series allows you to easily adapt the enclosures to meet the specific requirements of every application.
- DIN Rails TS 35 and TS15
- Mounting plates
- Hinges
- Wall-mounted holder

General ordering data

Type	MOPL K41 STAHL	Version
Order No.	3073070000	Klippon K (aluminium empty enclosure), Mounting plate, Mounting
GTIN (EAN)	4008190858001	plate, Height: 104 mm, Width: 109 mm, Depth: 2 mm, Material: Sheet
Qty.	1 pc(s).	steel, galvanized, galvanized, silver

KLIPPON K41 VMQ

Weidmüller Interface GmbH & Co. KG
Klingenbergstraße 26
D-32758 Detmold
Germany

www.weidmueller.com

Accessories

Depth 7.5 mm



The system accessories for the Klippon® K enclosure series allows you to easily adapt the enclosures to meet the specific requirements of every application.
- DIN Rails TS 35 and TS15
- Mounting plates
- Hinges
- Wall-mounted holder

General ordering data

Type	TS35X7.5 ST K41	Version
Order No.	8000003439	Rail, TS 35, TS 35 x 7.5, Width: 105 mm, without slot, Steel, galvanic
GTIN (EAN)	4050118652628	zinc plated and passivated
Qty.	20 pc(s).	

Type	TS35 105 KLIPPON K41/PO ...	Version
Order No.	1910070000	Rail, TS 35, TS 35 x 7.5, Width: 105 mm, without slot, Steel,
GTIN (EAN)	4032248536986	galvanized, chromium-plated
Qty.	1 pc(s).	

Depth 15 mm



The system accessories for the Klippon® K enclosure series allows you to easily adapt the enclosures to meet the specific requirements of every application.
- DIN Rails TS 35 and TS15
- Mounting plates
- Hinges
- Wall-mounted holder

General ordering data

Type	TS35X15 ST K41	Version
Order No.	8000073091	Rail, TS 35, TS 35 x 15, Width: 105 mm, with slot, Steel, galvanic zinc
GTIN (EAN)	4064675337027	plated and passivated
Qty.	20 pc(s).	