TRS 60VUC 1CO AGSNO

Weidmüller Interface GmbH & Co. KG
Klingenbergstraße 26
D-32758 Detmold
Germany

www.weidmueller.com

Product image



Similar to illustration

- 1 CO contact
- Contact material: AgSnO
- Unique multi-voltage input from 24 to 230 V UC
- Input voltages from 5 V DC to 230 V UC with coloured marking: AC: red, DC: blue, UC: white

General ordering data

Version	TERMSERIES, Relay module, Number of contacts: 1, CO contact AgSnO, Rated control voltage: 60 V UC ±10 %, Continuous current: 6 A, Screw connection, Test button available: No
Order No.	2153550000
Type	TRS 60VUC 1CO AGSNO
GTIN (EAN)	4050118427141
Qty.	10 pc(s).

TRS 60VUC 1CO AGSNO

Weidmüller Interface GmbH & Co. KG
Klingenbergstraße 26
D-32758 Detmold
Germany

www.weidmueller.com

Technical data

Dimensions and weights

Depth	87.8 mm	Depth (inches)	3.457 inch
Height	89.6 mm	Height (inches)	3.528 inch
Width	6.4 mm	Width (inches)	0.252 inch
Net weight	31.06 g		

Temperatures

Storage temperature	-40 °C...85 °C	Operating temperature	-40 °C...60 °C
Humidity	5-95% relative humidity, T_u = 40°C, without condensation		

Rated data UL

Ambient temperature (operational), max.	60 °C	Output current derating (ohmic)	5 A @ 60 °C, 6 A @ 55 °C
Connection cross-section AWG, min.	AWG 26	Connection cross-section AWG, max.	AWG 14
Type of conductor	rigid copper conductor, flexible copper conductor	Tightening torque, max.	0.4 Nm
Pollution severity level	2		

Control side

Rated control voltage	60 V UC ±10 %	Rated current AC	4,8 mA
Rated current DC	2.8 mA	Power rating	170 mW, 290 mVA
Status indicator	Green LED	Protective circuit	Rectifier
Coil voltage of the replacement relay deviating from the rated control voltage	Yes	Coil voltage of the replacement relay	60 V DC

Load side

Rated switching voltage	250 V AC	Continuous current	6 A
Max. switching frequency at rated load	0.1 Hz	Max. switching voltage, AC	250 V
Max. switching voltage, DC	250 V	Inrush current	30 A / 20 ms
AC switching capacity (resistive), max.	1500 VA	DC switching capacity (resistive), max.	144 W @ 24 V
Switch-on delay	≤ 7 ms	Switch-off delay	≤ 50 ms
Contact type	1 CO contact (AgSnO)	Mechanical service life	5 x 10^6 switching cycles
Min. switching power	100 mA @ 12 V		

General data

Operating altitude	≤ 2000 m, above sea level	
Rail	TS 35	
Test button available	No	
Mechanical switch position indicator	No	
Colour	black	
UL94 flammability rating component	Component	Housing
	UL94 flammability rating	V-0
	Component	Retaining clip
	UL94 flammability rating	V-0

TRS 60VUC 1CO AGSNO

Weidmüller Interface GmbH & Co. KG
Klingenbergstraße 26
D-32758 Detmold
Germany

www.weidmueller.com

Technical data

Insulation coordination

Rated voltage	300 V	Pollution severity	2
Surge voltage category	III	Clearance and creepage distances for control side - load side	≥ 6 mm
Dielectric strength for control side - load side	4 kV_{eff} / 1 Min.	Type of isolation at input and output	reinforced insulation
Dielectric strength of open contact	1 kV_{eff} / 1 min	Dielectric strength to mounting rail	4 kV_{eff} / 1 Min.
Impulse withstand voltage	6 kV (1.2/50 µs)	Protection degree	IP20

Further details of approvals / standards

Certificate No. (DNV)	TAA00001E5	Certificate no. (cULus)	E141197

Connection data

Wire connection method	Screw connection	Stripping length, rated connection	8 mm
Tightening torque, max.	0.4 Nm	Clamping range, rated connection	1.5 mm²
Clamping range, min.	0.14 mm²	Clamping range, max.	2.5 mm²
Wire connection cross section AWG, min.	AWG 26	Wire connection cross section AWG, max.	AWG 14
Wire cross-section, solid, min.	0.14 mm²	Wire cross-section, solid, max.	2.5 mm²
Wire cross-section, solid, min. (AWG)	AWG 26	Wire cross-section, solid, max. (AWG)	AWG 14
Wire connection cross section, finely stranded, min.	0.14 mm²	Wire connection cross section, finely stranded, max.	2.5 mm²
Wire cross-section, finely stranded, min. (AWG)	AWG 26	Wire cross-section, finely stranded, max. (AWG)	AWG 16
Wire connection cross-section, finely stranded with wire-end ferrules DIN 46228/4, min.	0.25 mm²	Wire connection cross-section, finely stranded with wire-end ferrules DIN 46228/4, max.	2.5 mm²
Conductor cross-section, flexible, AEH (DIN 46228-1), min.	0.25 mm²	Conductor cross-section, flexible, AEH (DIN 46228-1), max.	1.5 mm²
Wire connection cross section, finely stranded, two clampable wires, min.	0.5 mm²	Wire cross-section, finely stranded, two clampable wires, max.	1 mm²
Blade size	SD 0.6 x 3.5		

Classifications

ETIM 6.0	EC001437	ETIM 7.0	EC001437
ETIM 8.0	EC001437	ETIM 9.0	EC001437
ECLASS 9.0	27-37-16-01	ECLASS 9.1	27-37-16-01
ECLASS 10.0	27-37-16-01	ECLASS 11.0	27-37-16-01
ECLASS 12.0	27-37-16-01	ECLASS 13.0	27-37-16-01
ECLASS 14.0	27-37-16-01		

Environmental Product Compliance

REACH SVHC	Lead 7439-92-1
SCIP	9e2cbc49-76d9-4611-b8ec-5b4f549a0aa9
RoHS Compliance Status	Compliant with exemption
RoHS Exemption (if applicable/known)	7a, 7cl

TRS 60VUC 1CO AGSNO

Weidmüller Interface GmbH & Co. KG
Klingenbergstraße 26
D-32758 Detmold
Germany

www.weidmueller.com

Technical data

Approvals

Approvals	
ROHS	Conform
UL File Number Search	UL Website
Certificate no. (cULus)	E141197

Downloads

Approval/Certificate/Document of Conformity	EU Konformitätserklärung / EU Declaration of Conformity
Engineering Data	CAD data – STEP
User Documentation	Beipackzettel / Package Insert – multilingual
Catalogues	Catalogues in PDF-format

TRS 60VUC 1CO AGSNO

Weidmüller Interface GmbH & Co. KG
Klingenbergstraße 26
D-32758 Detmold
Germany

www.weidmueller.com

Drawings

Wiring diagram

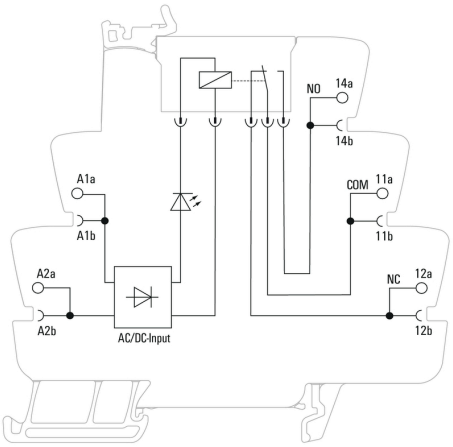

Graph

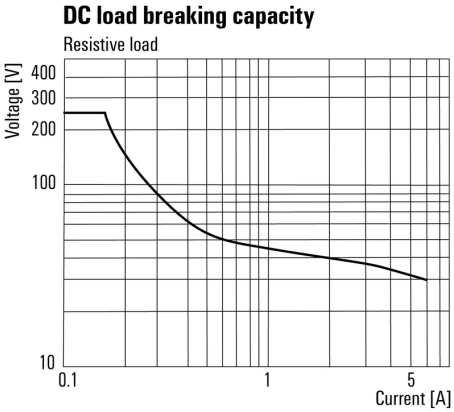

DC load limit curve
Resistive load

Graph

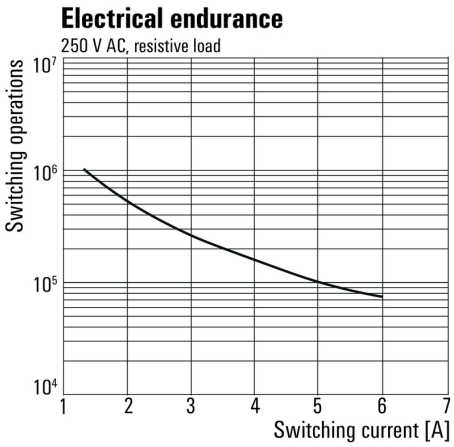

Electrical service life230 V AC resistive load
230 V AC resistive load

Dimensional drawing

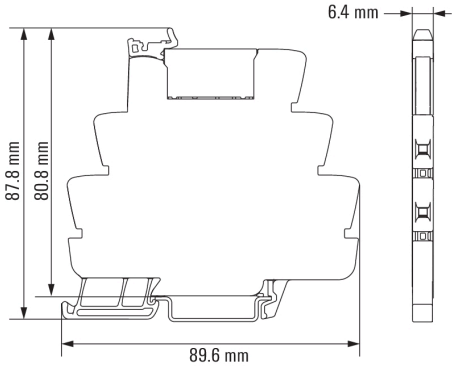

TRS 60VUC 1CO AGSNO

Weidmüller Interface GmbH & Co. KG
Klingenbergstraße 26
D-32758 Detmold
Germany

www.weidmueller.com

Drawings

Miscellaneous

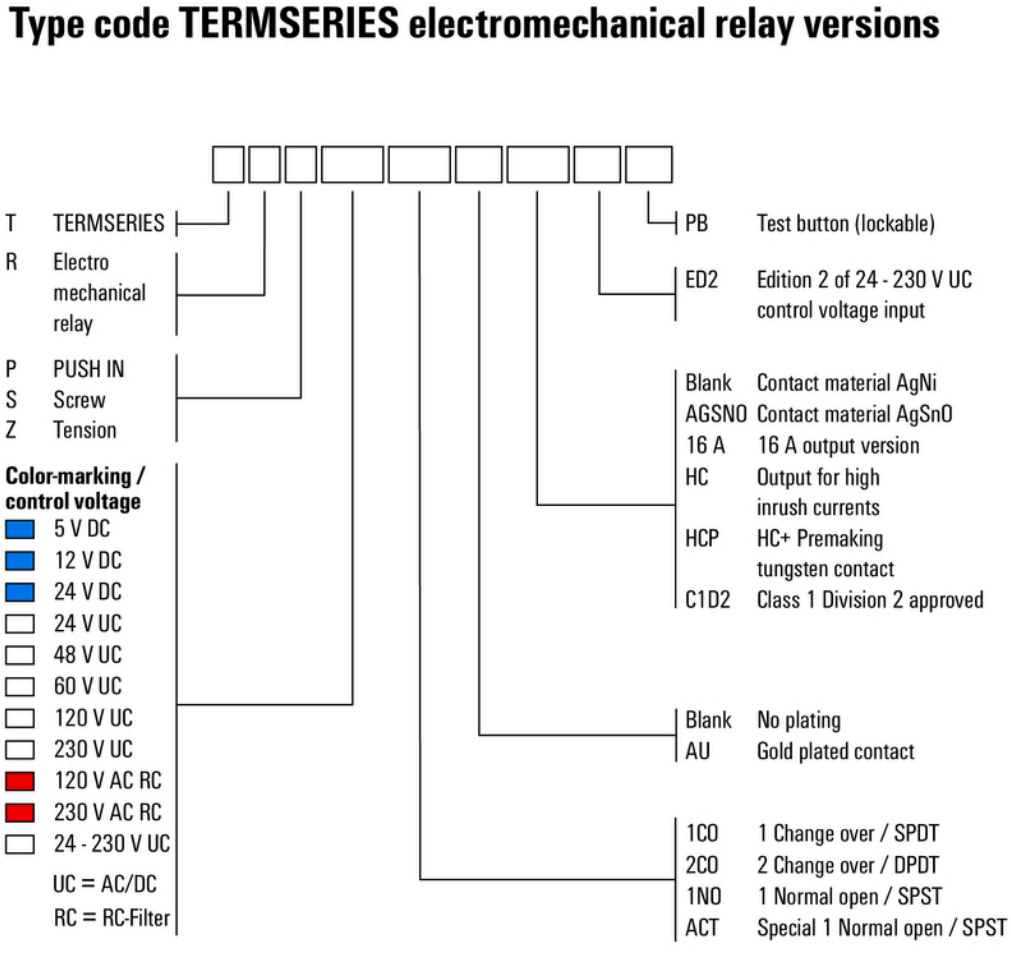

Type codes