GH MCZUE1.5/UE SW 1683

Weidmüller Interface GmbH & Co. KG
Klingenbergstraße 26
D-32758 Detmold
Germany

www.weidmueller.com

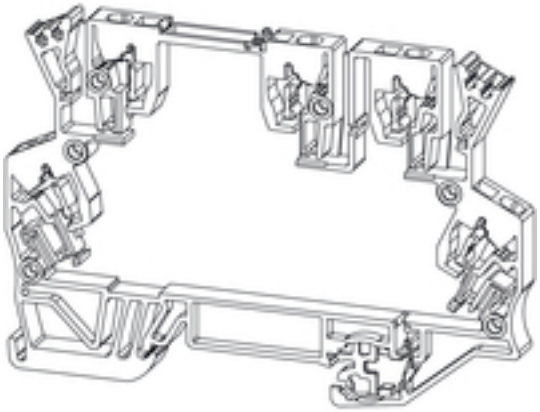

Open miniature housing in modular terminal format with five tension clamp connections. A transparent hinged top plate can be used for labelling and provides access to potentiometer and status displays. Plug-in cross-connectors can be used to interconnect the three top connections. A cover plate for closing off the housing is also available.

General ordering data

Version	Small housing, OMNIMATE Housing - TERMINALBOX black, Flange-mounted housing, Width: 6 mm
Order No.	2409990000
Type	GH MCZUE1.5/UE SW 1683
GTIN (EAN)	4032248841172
Qty.	100 pc(s).

Creation date September 17, 2022 9:54:53 PM CEST

GH MCZUE1.5/UE SW 1683

Weidmüller Interface GmbH & Co. KG
Klingenbergstraße 26
D-32758 Detmold
Germany

www.weidmueller.com

Technical data

Dimensions and weights

Height	63 mm	Height (inches)	2.48 inch
Width	6 mm	Width (inches)	0.236 inch
Length	91 mm	Length (inches)	3.583 inch
Net weight	13 g		

Design - IN requirements

PCB thickness	1 mm	Tolerance for the PCB shape	±0.1 mm
Tolerance of circuit board thickness	±0.1 mm		

Individualization options

Alternitive colours	More on request	Customer specific cutouts possible	No
Customer specific labelling possible	Yes		

Assembly properties

Number of connection levels	2	Number of PCBs, max.	1
Cross-connection	Yes	Type of connection	without, Connection element

Housing properties

Flip cover mountable	Yes	Marker integrateable	Yes
Cut out in clip-on foot area as preperation for	PE-contact, Contact included!		

General data

Colour	black	Colour chart (similar)	RAL 9011
Encapsulation option	Yes	Protection degree	IP20
Rail	TS 32, TS 35		

Material data

Comparative Tracking Index (CTI)	600 ≤ CTI	Insulating material group	I

Approvals

ROHS	Conform

Downloads

Catalogues	Catalogues in PDF-format
Brochures	FL ANALO.SIGN.CONV. EN MB DEVICE MANUF. EN FL MACHINE SAFETY EN FL 72H SAMPLE SER EN PO OMNIMATE EN

GH MCZUE1.5/UE SW 1683

Weidmüller Interface GmbH & Co. KG
Klingenbergstraße 26
D-32758 Detmold
Germany

www.weidmueller.com

Drawings

