SCZ 3.81/09/180LRZE SN OR BX

Weidmüller Interface GmbH & Co. KG
Klingenbergstraße 26
D-32758 Detmold
Germany

www.weidmueller.com

Product image



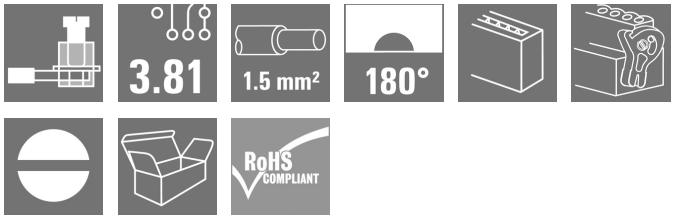

The inverted SCZ pin plug with clamping-yoke screw connection is designed for straight wire outlet connections. It can be used in two ways:
- for wire-to-wire connections together with the BCZ
- As a mating plug for the touch-safe BCL-SMT socket block on the PCB.

The SCZ is available in four different versions:
- Without flange ("G", closed)
- With standard flange ("F", with nut) for wire-to-wire connections
- With inverted flange ("FI", with screw) for screw connection to the BCL-SMT LFI
- With Weidmüller's patented release latch (LR) for lock-and-release latching with the BCL-SMT LFI: no strain and no tools needed.

Weidmüller's 3.81-mm-pitch (0.15 inch) plug-in connectors are compatible with the layouts of standard connectors and offer space for labelling and coding.

General ordering data

Version	PCB plug-in connector, male plug, 3.81 mm, Number of poles: 9, 180°, Clamping yoke connection, Clamping range, max. : 1.5 mm², Box
Order No.	2444230000
Type	SCZ 3.81/09/180LRZE SN OR BX
GTIN (EAN)	4050118542578
Qty.	50 pc(s).
Product data	IEC: 320 V / 17.5 A / 0.2 - 1.5 mm² UL: 300 V / 10 A / AWG 28 - AWG 16
Packaging	Box

SCZ 3.81/09/180LRZE SN OR BX

Weidmüller Interface GmbH & Co. KG
Klingenbergstraße 26
D-32758 Detmold
Germany

www.weidmueller.com

Technical data

Dimensions and weights

Depth	42.1 mm	Depth (inches)	1.657 inch
Height	16.6 mm	Height (inches)	0.654 inch
Net weight	10.31 g		

System Parameters

Product family	OMNIMATE Signal - series BC/SC 3.81
Type of connection	Field connection
Wire connection method	Clamping yoke connection
Pitch in mm (P)	3.81 mm
Pitch in inches (P)	0.15 "
Conductor outlet direction	180°
Number of poles	9
L1 in mm	30.48 mm
L1 in inches	1.2 "
Number of rows	1
Pin series quantity	1
Rated cross-section	1 mm²
Touch-safe protection acc. to DIN VDE 57 106	finger-safe plugged/ back-of-hand-safe unplugged
Touch-safe protection acc. to DIN VDE 0470	IP20 plugged/ IP10 unplugged
Volume resistance	≤5 mΩ
Can be coded	Yes
Stripping length	7 mm
Clamping screw	M 2
Screwdriver blade	0.4 x 2.5
Screwdriver blade standard	DIN 5264
Plugging cycles	25
Plugging force/pole, max.	8 N
Pulling force/pole, max.	5 N
Tightening torque	Torque type: Wire connection Usage information: Tightening torque: min. 0.2 Nm, max. 0.25 Nm

Material data

Insulating material	PA 66 GF 30	Colour	orange
Colour chart (similar)	RAL 2000	Insulating material group	II
Comparative Tracking Index (CTI)	≥ 550	UL 94 flammability rating	V-0
Contact material	Cu-alloy	Contact surface	tinned
Layer structure of plug contact	4...8 µm Sn	Storage temperature, min.	-40 °C
Storage temperature, max.	70 °C	Operating temperature, min.	-50 °C
Operating temperature, max.	120 °C	Temperature range, installation, min.	-25 °C
Temperature range, installation, max.	120 °C		

Conductors suitable for connection

Clamping range, min.	0.08 mm²
Clamping range, max.	1.5 mm²
Wire connection cross section AWG, min.	AWG 28
Wire connection cross section AWG, max.	AWG 16
Solid, min. H05(07) V-U	0.2 mm²

SCZ 3.81/09/180LRZE SN OR BX

Weidmüller Interface GmbH & Co. KG
Klingenbergstraße 26
D-32758 Detmold
Germany

www.weidmueller.com

Technical data

Solid, max. H05(07) V-U	1.5 mm²			
Flexible, min. H05(07) V-K	0.2 mm²			
Flexible, max. H05(07) V-K	1.5 mm²			
w. plastic collar ferrule, DIN 46228 pt 4, min.	0.2 mm²			
w. plastic collar ferrule, DIN 46228 pt 4, max.	1.5 mm²			
w. wire end ferrule, DIN 46228 pt 1, min.	0.2 mm²			
w. wire end ferrule, DIN 46228 pt 1, max.	1.5 mm²			
Plug gauge in accordance with EN 60999 a x b; ø	2.4 mm x 1.5 mm ; 2.4 mm			
Clampable conductor	Cross-section for conductor connection	Type	fine-wired	
		nominal	0.5 mm²	
	wire end ferrule	Stripping length	nominal	6 mm
		Recommended wire-end ferrule	H0,5/6	
	Cross-section for conductor connection	Type	fine-wired	
		nominal	0.75 mm²	
	wire end ferrule	Stripping length	nominal	6 mm
		Recommended wire-end ferrule	H0,75/6	
	Cross-section for conductor connection	Type	fine-wired	
		nominal	1 mm²	
	wire end ferrule	Stripping length	nominal	6 mm
		Recommended wire-end ferrule	H1,0/6	
	Cross-section for conductor connection	Type	fine-wired	
		nominal	1.5 mm²	
	wire end ferrule	Stripping length	nominal	7 mm
		Recommended wire-end ferrule	H1,5/7	
Reference text	The outside diameter of the plastic collar should not be larger than the pitch (P), Length of ferrules is to be chosen depending on the product and the rated voltage.			

Rated data acc. to IEC

tested acc. to standard	IEC 60664-1, IEC 61984	Rated current, min. number of poles (Tu=20°C)	17.5 A
Rated current, max. number of poles (Tu=20°C)	17.1 A	Rated current, min. number of poles (Tu=40°C)	17.5 A
Rated current, max. number of poles (Tu=40°C)	15.2 A	Rated voltage for surge voltage class / pollution degree II/2	320 V
Rated voltage for surge voltage class / pollution degree III/2	160 V	Rated voltage for surge voltage class / pollution degree III/3	160 V
Rated impulse voltage for surge voltage class/ pollution degree II/2	2.5 kV	Rated impulse voltage for surge voltage class/ pollution degree III/2	2.5 kV
Rated impulse voltage for surge voltage class/ contamination degree III/3	2.5 kV	Short-time withstand current resistance	3 x 1s with 76 A

Rated data acc. to CSA

Rated voltage (Use group B / CSA)	300 V	Rated voltage (Use group C / CSA)	50 V
Rated current (Use group B / CSA)	11 A	Rated current (Use group C / CSA)	11 A
Wire cross-section, AWG, min.	AWG 28	Wire cross-section, AWG, max.	AWG 16

SCZ 3.81/09/180LRZE SN OR BX

Weidmüller Interface GmbH & Co. KG
Klingenbergstraße 26
D-32758 Detmold
Germany

www.weidmueller.com

Technical data

Rated data acc. to UL 1059

Institute (cURus)		Certificate No. (cURus)	E60693
Rated voltage (Use group B / UL 1059)	300 V	Rated voltage (Use group D / UL 1059)	300 V
Rated current (Use group B / UL 1059)	10 A	Rated current (Use group D / UL 1059)	10 A
Wire cross-section, AWG, min.	AWG 28	Wire cross-section, AWG, max.	AWG 16
Reference to approval values	Specifications are maximum values, details - see approval certificate.		

Packing

Packaging	Box	VPE length	170 mm
VPE width	121 mm	VPE height	54 mm

Type tests

Test: Durability of markings	Standard	DIN EN 61984 section 7.3.2 / 09.02 taking pattern from DIN EN 60068-2-70 / 07.96
	Test	mark of origin, type identification, rated voltage, rated cross-section, pitch, type of material, approval marking UL, approval marking CSA
	Evaluation	available
	Test	durability
	Evaluation	passed
Test: Misengagement (Non-interchangeability)	Standard	DIN EN 61984 section 6.3 and 6.9.1 / 09.02, DIN EN 60512-13-5 / 11.06
	Test	180° turned without coding elements
	Evaluation	passed
	Test	visual examination
	Evaluation	passed

SCZ 3.81/09/180LRZE SN OR BX

Weidmüller Interface GmbH & Co. KG
Klingenbergstraße 26
D-32758 Detmold
Germany

www.weidmueller.com

Technical data

Test: Clampable cross section	Standard		DIN EN 60999-1 section 7 and 9.1 / 12.00, DIN EN 60947-1 section 8.2.4.5.1 / 12.02
	Conductor type	Type of conductor and conductor cross-section	solid 0.08 mm²
		Type of conductor and conductor cross-section	stranded 0.08 mm²
		Type of conductor and conductor cross-section	solid 1.5 mm²
		Type of conductor and conductor cross-section	stranded 1.5 mm²
		Type of conductor and conductor cross-section	AWG 28/1
		Type of conductor and conductor cross-section	AWG 28/19
		Type of conductor and conductor cross-section	AWG 16/1
		Type of conductor and conductor cross-section	AWG 16/19
	Evaluation		passed
Test for damage to and accidental loosening of conductors	Standard		DIN EN 60999-1 section 9.4 / 12.00
	Requirement		0.2 kg
	Conductor type	Type of conductor and conductor cross-section	stranded 0.25 mm²
		Type of conductor and conductor cross-section	AWG 28/1
		Type of conductor and conductor cross-section	AWG 28/19
	Evaluation		passed
	Requirement		0.3 kg
	Conductor type	Type of conductor and conductor cross-section	solid 0.5 mm²
	Evaluation		passed
	Requirement		0.4 kg
	Conductor type	Type of conductor and conductor cross-section	solid 1.5 mm²
		Type of conductor and conductor cross-section	stranded 1.5 mm²
		Type of conductor and conductor cross-section	AWG 16/1
		Type of conductor and conductor cross-section	AWG 16/19
	Evaluation		passed

SCZ 3.81/09/180LRZE SN OR BX

Weidmüller Interface GmbH & Co. KG
Klingenbergstraße 26
D-32758 Detmold
Germany

www.weidmueller.com

Technical data

Pull-out test	Standard	DIN EN 60999-1 section 9.5 / 12.00	
	Requirement	≥10 N	
	Conductor type	Type of conductor and conductor cross-section	stranded 0.25 mm²
		Type of conductor and conductor cross-section	AWG 28/1
		Type of conductor and conductor cross-section	AWG 28/19
	Evaluation	passed	
	Requirement	≥20 N	
	Conductor type	Type of conductor and conductor cross-section	H05V-U0.5
	Evaluation	passed	
	Requirement	≥40 N	
	Conductor type	Type of conductor and conductor cross-section	H07V-U1.5
		Type of conductor and conductor cross-section	H07V-K1.5
		Type of conductor and conductor cross-section	AWG 16/1
		Type of conductor and conductor cross-section	AWG 16/19
	Evaluation	passed	

Classifications

ETIM 6.0	EC002638	ETIM 7.0	EC002638
ETIM 8.0	EC002638	ETIM 9.0	EC002638
ECLASS 9.0	27-44-03-09	ECLASS 9.1	27-44-03-09
ECLASS 10.0	27-44-03-09	ECLASS 11.0	27-46-02-02
ECLASS 12.0	27-46-02-02	ECLASS 13.0	27-46-02-02
ECLASS 14.0	27-46-02-02		

Environmental Product Compliance

REACH SVHC	Lead 7439-92-1
SCIP	cec56c8c-fe86-40ec-b01a-efe288a878ac
RoHS Compliance Status	Compliant with exemption
RoHS Exemption (if applicable/known)	6c

SCZ 3.81/09/180LRZE SN OR BX

Weidmüller Interface GmbH & Co. KG
Klingenbergstraße 26
D-32758 Detmold
Germany

www.weidmueller.com

Technical data

Important note

IPC conformity	Conformity: The products are developed, manufactured and delivered according international recognized standards and norms and comply with the assured properties in the data sheet resp. fulfill decorative properties in accordance with IPC-A-610 "Class 2". Further claims on the products can be evaluated on request.
Notes	• Additional variants on request • Rated current related to rated cross-section & min. No. of poles. • Wire end ferrule with plastic collar to DIN 46228/4 • P on drawing = pitch • Rated data refer only to the component itself. Clearance and creepage distances to other components are to be designed in accordance with the relevant application standards. • In accordance with IEC 61984, OMNIMATE-connectors are connectors without breaking capacity (COC). During designated use, connectors are not allowed to be engaged or disengaged when live or under load • Long term storage of the product with average temperature of 50 °C and maximum humidity 70%, 36 months

Approvals

Approvals	c UL us
ROHS	Conform
UL File Number Search	UL Website
Certificate No. (cURus)	E60693

Downloads

Engineering Data	CAD data – STEP
Product Change Notification	PCN_2017_190_PL30X_BL_381_Lock_Release_lever_EN PCN_2017_190_PL30X_BL_381_Löseriegel_DE
Catalogues	Catalogues in PDF-format

SCZ 3.81/09/180LRZE SN OR BX

Weidmüller Interface GmbH & Co. KG
Klingenbergstraße 26
D-32758 Detmold
Germany

www.weidmueller.com

Drawings

Product image

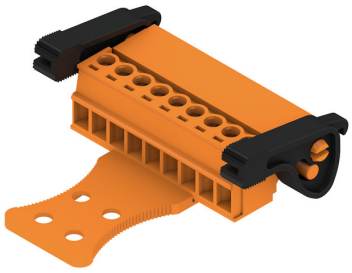

Dimensional drawing

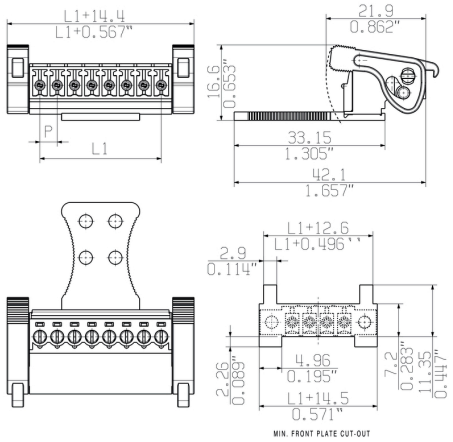

Graph

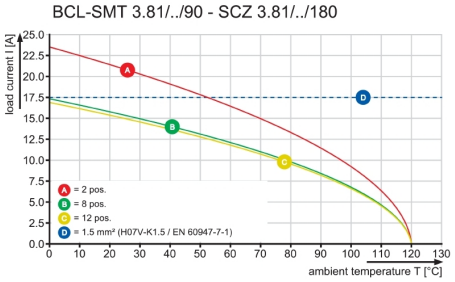

Graph

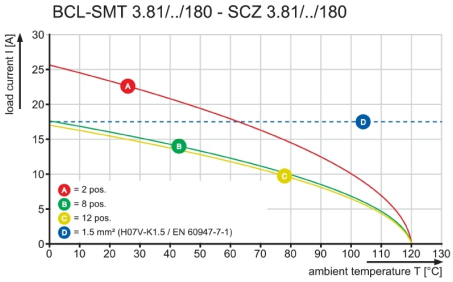

Graph

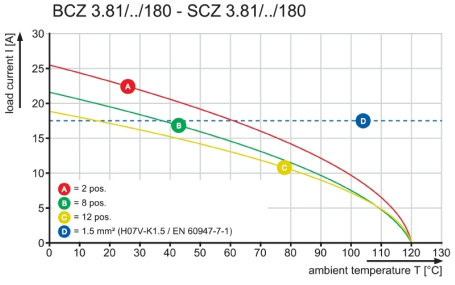

The reproduction, distribution and utilization of this document as well as the communication of its contents to others without explicit authorization is prohibited.
Offenders will be held liable for the payment of damages. Weidmueller exclusively reserves the right to file for patents, utility models or designs.
© Weidmueller Interface GmbH & Co. KG

Dimensions without tolerances are no check dimensions

The English version is binding

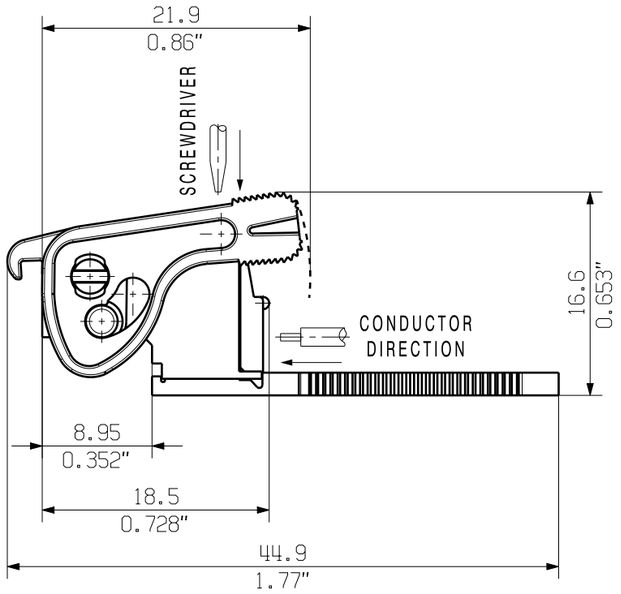

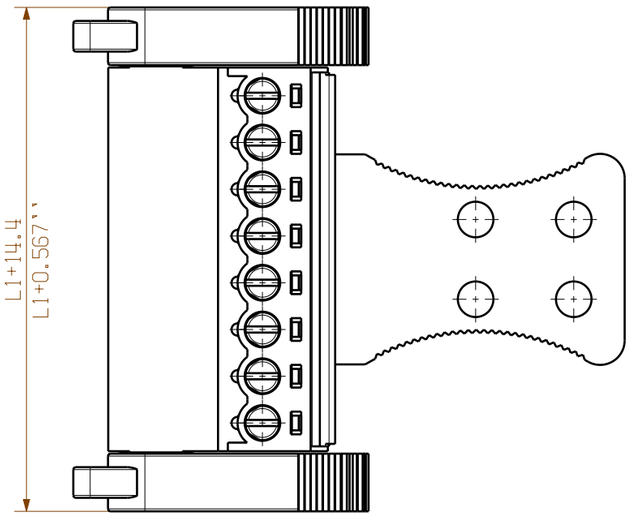

SCZ 3.81/.../180LRZE SN...
ONE ZE FOR 4-9 POLE

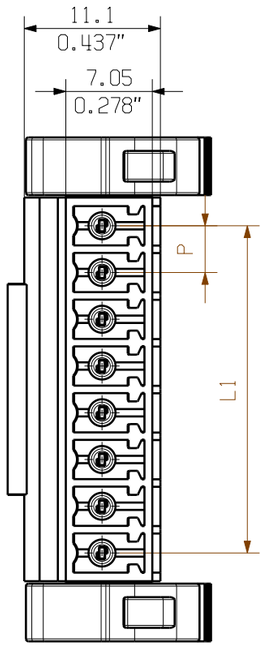

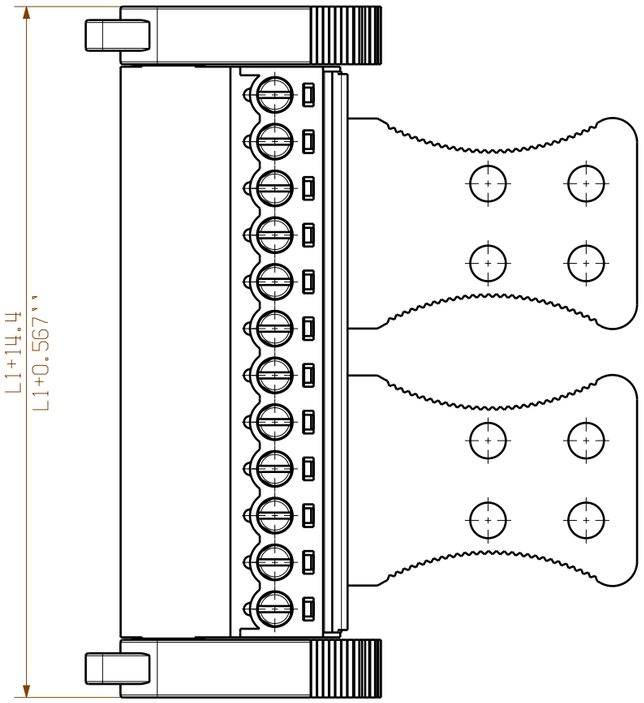

SCZ 3.81/.../180LRZE SN...
TWO ZE FOR 10-20 POLE

P= 3.81 RASTER
0.15" PITCH

N	L1 [mm]	L1 [inch]
12	41.91	1.651
11	38.10	1.501
10	34.29	1.351
9	30.48	1.201
8	26.67	1.051
7	22.86	0.901
6	19.05	0.751
5	15.24	0.600
4	-	-
3	-	-
2	-	-

KUNDENZEICHNUNG
CUSTOMER DRAWING

GENERAL TOLERANCE:
DIN ISO 2768-m

RoHS COMPLIANT

Max. nos.

86251/0
26.05.16 XIANG_K 00
.
Modification

. .

Cat.no.: .

Weidmüller

C 63184 00
Drawing no. Issue no.

Sheet 00 of 00 sheets

	Date	Name
Drawn	17.02.2016	XIANG_K
Responsible		XIANG_K
Checked	26.05.2016	ZHOU_N
Approved		XU_S

Scale: 2/1

Supersedes: .

SCZ 3.81...180LR...

ZUGBUEGELANSCHLUSS STIFTLEISTE
CLAMPING YOKE CONNECTION PIN HEADER

Product file: SCZ 3.81 7078