ACT20X-2HDI-2SDO-RNO-P

Weidmüller Interface GmbH & Co. KG
Klingenbergstraße 26
D-32758 Detmold
Germany

www.weidmueller.com

Product image, Similar to illustration



The ACT20X-HDI-SDO/ 2HDI-2SNO RNO/RNC isolating switch amplifiers are specially designed for recording NAMUR sensor signals and digital switching signals which originate from Ex zone 0.
Switching relays, optionally available with NO or NC contacts, transfer output signals to the safe zone.
Integrated alarm contacts issue an alert in the event of a malfunction; this makes troubleshooting easier and increases system availability.
The rail mounted disconnect-switch amplifiers are optionally available in one- or two-channel versions.
With 11 mm width per channel, the devices need little space in the electrical cabinet.

General ordering data

Version	EX signal isolating converter, Ex-input: NAMUR sensor/switch, Safe-output: relay, NO contact, 2-channel
Order No.	2456080000
Type	ACT20X-2HDI-2SDO-RNO-P
GTIN (EAN)	4050118471274
Qty.	1 pc(s).

ACT20X-2HDI-2SDO-RNO-P

Weidmüller Interface GmbH & Co. KG
Klingenbergstraße 26
D-32758 Detmold
Germany

www.weidmueller.com

Technical data

Dimensions and weights

Depth	114.6 mm	Depth (inches)	4.512 inch
Height	127.3 mm	Height (inches)	5.012 inch
Width	22.5 mm	Width (inches)	0.886 inch
Net weight	190 g		

Temperatures

Storage temperature	-20 °C...85 °C	Operating temperature	-20 °C...60 °C
Humidity	0...95 % (no condensation)		

Probability of failure

SIL PAPER	SIL certificate	SIL in compliance with IEC 61508	2
MTBF	207 a		

Assembling

Mounting position	horizontal or vertical	Rail	TS 35
Type of mounting	Snap mounting support rail		

Input EX

Input frequency	<20 Hz	Input resistance	1 kΩ
NAMUR supply	8 V DC / 8 mA	Output signal in case of wire break	<0.1 mA, > 6.5 mA (in case of wire break)
Pulse duration	> 0.1 ms	Resistance	RP = 750 Ω / RS = 15kΩ
Sensor	NAMUR sensor, according to EN60947-5-6, switch with or without RS, RP	Sensor supply	8 V DC / 8 mA
Trigger level high	> 2.1 mA	Trigger level low	<1.2 mA
Type	intrinsically safe circuit		

Digital output

Continuous current	≤ 2 A AC/DC (safe area, Zone 2 area)	Function	Output = input, direct or inverse (configurable)
Max. switching frequency	20 Hz	Nominal switching voltage	≤ 250 V AC / 30 V DC (safe area) ≤ 32 V AC / 32 V DC (zone 2)
Switching capacity	500 VA / 60 W (safe area), 16 VA / 60 W (zone 2)	Type	Relay, 1 NC contact, Switching frequency 20 Hz

Alarm output

Alarm function	Line interruption at the input, Short circuit at input, No supply voltage, Device error	Continuous current	≤ 0.5 A AC / 0.3 A DC (safe zone), ≤ 0,5 A AC / 1 A DC (zone 2)
Nominal switching voltage	≤ 125 V AC / 110 V DC (safe area) ≤ 32 V AC / 32 V DC (zone 2)	Power rating	≤ 62.5 VA / 32 W (safe area) ≤ 16 VA / 32 W (Zone 2)
Type	Status relay, 1 NC (voltage-free)		

ACT20X-2HDI-2SDO-RNO-P

Weidmüller Interface GmbH & Co. KG
Klingenbergstraße 26
D-32758 Detmold
Germany

www.weidmueller.com

Technical data

General specifications

Configuration	With FDT/DTM software, Requires configuration adapter 8978580000 CBX200 USB	Humidity	0...95 % (no condensation)
Operating altitude	≤ 2000 m	Power consumption	≤1.9 W
Protection degree	IP20	Type of connection	PUSH IN
Voltage supply	19.2...31.2 V DC		

Insulation coordination

EMC standards	EN 61326-1	Insulation voltage	2.6 kV (input / output)
Rated voltage	300 V	Standards	EN 61010-1

Data for Ex applications (ATEX)

Current I_0	12 mA DC	Installation location	Device installed in safe area, zone 2
Marking	II (1) G [Ex ia Ga] IIC/IIB/IIA, II (1) D [Ex ia Da] IIIC, I (M1) [Ex ia Ma] I	Power P_0	32 mW
Voltage U_0	10.6 V DC		

Safety-related basic specifications

Description of the "safe state"	de-energized (relay output)	Device type	B
Diagnostic test interval	10 s	T_{proof}	4 a
Total failure rate for safe detected failures (λ_{SD})	0 FIT	Hardware fault tolerance (HFT)	0
Safety category	SIL 2	Relay lifetime	100000 times
Safe Failure Fraction (SFF)	90 %	Mean Time To Repair (MTTR)	8 h
Total failure rate for safe undetected failures (λ_{SU})	289 FIT	Total failure rate for dangerous detected failures (λ_{DD})	130 FIT
Total failure rate for dangerous undetected failures (λ_{DU})	46 FIT	Probability of outage PFH	$4.66 \times 10^{-8}\ h^{-1}$
Demand mode	High	Demand rate	1,000 s
Demand response time	<10 ms (relay output)		

Safety-related specifications Low demand mode

Safe Failure Fraction (SFF)	90 %	Average Probability of Failure on Demand (PFD_{avg})	2.04×10^{-4} (T_{proof} = 1 year), 4.08×10^{-4} (T_{proof} = 2 years), 1.02×10^{-4} (T_{proof} = 5 years)

ACT20X-2HDI-2SDO-RNO-P

Weidmüller Interface GmbH & Co. KG
Klingenbergstraße 26
D-32758 Detmold
Germany

www.weidmueller.com

Technical data

Connection data

Type of connection	PUSH IN	Wire connection cross section AWG, min.	AWG 26
Wire connection cross section AWG, max.	AWG 14	Wire cross-section, solid, min.	0.2 mm²
Wire cross-section, solid, max.	2.5 mm²	Wire connection cross section, finely stranded, min.	0.2 mm²
Wire connection cross section, finely stranded, max.	2.5 mm²	Wire connection cross-section, finely stranded with wire-end ferrules DIN 46228/4, min.	0.2 mm²
Wire connection cross-section, finely stranded with wire-end ferrules DIN 46228/4, max.	2.5 mm²		

Guarantee

Time interval	3 years

Classifications

ETIM 6.0	EC002653	ETIM 7.0	EC002653
ETIM 8.0	EC002653	ETIM 9.0	EC002653
ECLASS 9.0	27-21-01-20	ECLASS 9.1	27-21-01-20
ECLASS 10.0	27-21-01-20	ECLASS 11.0	27-21-01-20
ECLASS 12.0	27-21-01-20	ECLASS 13.0	27-21-01-20
ECLASS 14.0	27-21-01-20		

Environmental Product Compliance

REACH SVHC	Lead 7439-92-1
SCIP	2f6dd957-421a-46db-a0c2-cf1609156924
RoHS Compliance Status	Compliant with exemption
RoHS Exemption (if applicable/known)	7a, 7cl

Approvals

Approvals

ROHS	Conform
UL File Number Search	UL Website
Certificate no. (cULus)	E337701

ACT20X-2HDI-2SDO-RNO-P

Weidmüller Interface GmbH & Co. KG
Klingenbergstraße 26
D-32758 Detmold
Germany

www.weidmueller.com

Technical data

Downloads

Approval/Certificate/Document of Conformity	Application notes – Certification SIL Certification DNV GL Application notes – Certification ATEX Application notes – Certification IECEx Declaration of Conformity
Engineering Data	CAD data – STEP
Software	WI-Manager, DTM-Library for online installation Release notes for Weidmueller FDT-DTM Software version
User Documentation	Application notes – Safety Manual for SIL application Instruction sheet Handbuch ACT20X- Serie, deutsch Manual ACT20X- series, english 20210120 Security Advisory - WI-Manager affected by MundM Software fdtCONTAINER vulnerability
Catalogues	Catalogues in PDF-format

ACT20X-2HDI-2SDO-RNO-P

Weidmüller Interface GmbH & Co. KG
Klingenbergstraße 26
D-32758 Detmold
Germany

www.weidmueller.com

Drawings

Connection diagram

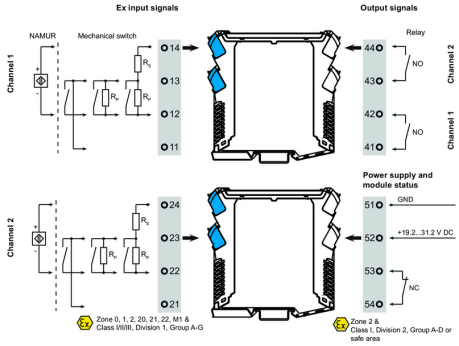

Application

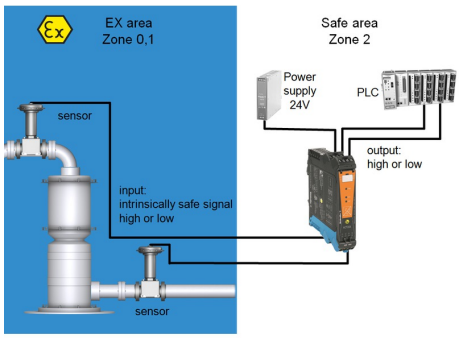

Block diagram

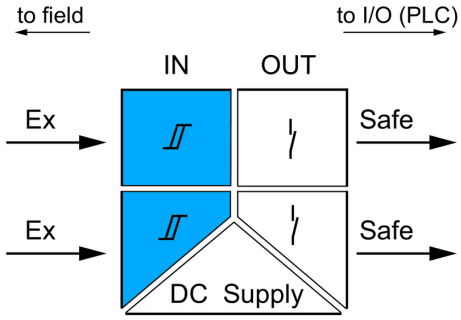

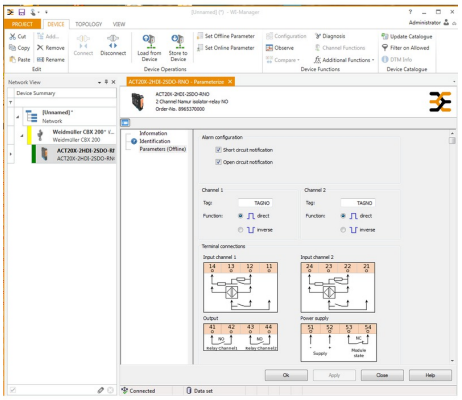

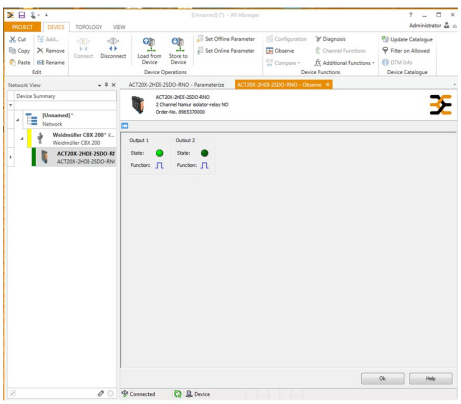

screenshot of configuration with FDT2 / DTM software

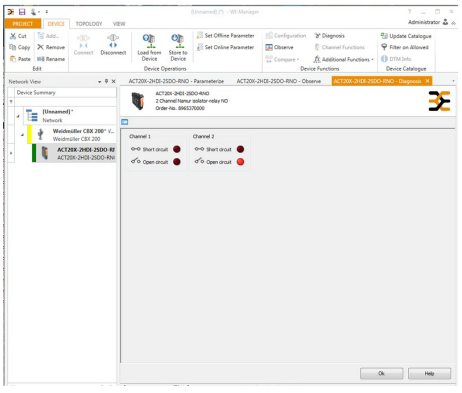

screenshot of "observe" with FDT2 / DTM software

ACT20X-2HDI-2SDO-RNO-P

Weidmüller Interface GmbH & Co. KG
Klingenbergstraße 26
D-32758 Detmold
Germany

www.weidmueller.com

Drawings

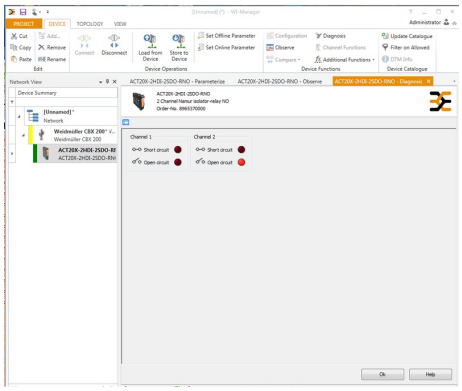

screenshot of "diagnosis" with FDT2 / DTM software

Dimensioned drawing

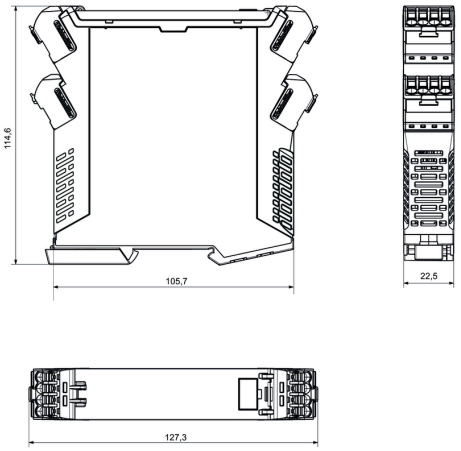



Removable terminals with coding