ACT20X-SAI-HAO-P

Weidmüller Interface GmbH & Co. KG
Klingenbergstraße 26
D-32758 Detmold
Germany

www.weidmueller.com

Product image, Similar to illustration



The ACT20X-SAI-HAO/2SAI-2HAO current output isolators are suitable for controlling field devices in Ex areas, up to Zone 0.
The input/output-side HART protocol transparent signal connection is implemented using 4 to 20 mA current loops.
Integrated alarm contacts issue an alert in the event of a malfunction; this makes troubleshooting easier and increases system availability.
The rail-mounted current output isolators are optionally available in one- or two-channel versions.
With 11 mm width per channel, the devices need little space in the electrical cabinet.

General ordering data

Version	EX signal isolating converter, Safe-input: 4-20mA, Ex output: 4 - 20 mA, HART® transparency, 1-channel
Order No.	2456160000
Type	ACT20X-SAI-HAO-P
GTIN (EAN)	4050118471564
Qty.	1 pc(s).

ACT20X-SAI-HAO-P

Weidmüller Interface GmbH & Co. KG
Klingenbergstraße 26
D-32758 Detmold
Germany

www.weidmueller.com

Technical data

Dimensions and weights

Depth	114.6 mm	Depth (inches)	4.512 inch
Height	127.3 mm	Height (inches)	5.012 inch
Width	22.5 mm	Width (inches)	0.886 inch
Net weight	189 g		

Temperatures

Storage temperature	-20 °C...85 °C	Operating temperature	-20 °C...60 °C
Humidity	0...95 % (no condensation)		

Probability of failure

SIL PAPER	SIL certificate	SIL in compliance with IEC 61508	2
MTBF	135 a		

Assembling

Mounting position	horizontal or vertical	Rail	TS 35

Input

Input current	4...20mA	Number of inputs	1
Voltage drop	<2 V		

Output

2-wire supply	> 14.5 V @ 20 mA	Influence of load resistance	≤ 0.01% of span / 100 Ω
Load impedance current	≤ 725 Ω	Output current	4...20 mA (max. 23 mA)
Output signal limit	<28 mA	Residual ripple (current loop)	<7.5 mV_{eff}
Type	intrinsically safe circuit		

Digital output

Max. switching frequency	0 Hz		

Alarm output

Alarm function	Signal limit exceeded, Line interruption at the input, No supply voltage, Device error	Continuous current	≤ 0,5 A AC / 1 A DC (zone 2)
Hysteresis	0.1 mA (switching threshold)	Nominal switching voltage	≤ 125 V AC / 110 V DC (safe area) ≤ 32 V AC / 32 V DC (zone 2)
Power rating	≤ 62.5 VA / 32 W (safe area) ≤ 16 VA / 32 W (Zone 2)	Switching thresholds	0...29.9 mA (programmable)
Type	Status relay, 1 NC (voltage-free)		

ACT20X-SAI-HAO-P

Weidmüller Interface GmbH & Co. KG
Klingenbergstraße 26
D-32758 Detmold
Germany

www.weidmueller.com

Technical data

General specifications

Accuracy	<0.1% span	Configuration	With FDT/DTM software, Requires configuration adapter 8978580000 CBX200 USB
HART® transparency supported	Yes	Humidity	0...95 % (no condensation)
Operating altitude	≤ 2000 m	Power consumption	≤1.8 W
Protection degree	IP20	Step response time	≤ 5 ms
Temperature coefficient	<0.01% of span/°C (TU)	Type of connection	PUSH IN
Type of signal forwarding according to HART®	unchanged	Voltage supply	19.2...31.2 V DC

Insulation coordination

EMC standards	EN 61326-1	Insulation voltage	2.6 kV (input / output)
Rated voltage	300 V	Standards	EN 61010-1

Data for Ex applications (ATEX)

Current I_0	93 mA	Installation location	Device installed in safe area, zone 2
Marking	II (1) G [Ex ia Ga] IIC/IIB/IIA, II (1) D [Ex ia Da] IIIC, I (M1) [Ex ia Ma] I	Power P_0	<650 mW
Voltage U_0	28 V DC		

Safety-related basic specifications

Description of the "safe state"	analogue Output ≤ 3.6 mA or output ≥ 21 mA	Device type	A
T_{proof}	5 a	Total failure rate for safe detected failures (λ_{SD})	0 FIT
Hardware fault tolerance (HFT)	0	Safety category	SIL 2
Safe Failure Fraction (SFF)	85 %	Mean Time To Repair (MTTR)	24 h
Total failure rate for safe undetected failures (λ_{SU})	164 FIT	Total failure rate for dangerous detected failures (λ_{DD})	127 FIT
Total failure rate for dangerous undetected failures (λ_{DU})	48 FIT	Probability of outage PFH	4.8×10^{-8} h^{-1}
Demand mode	High		

Safety-related specifications Low demand mode

Average Probability of Failure on Demand (PFD_{avg})	2.29×10^{-4} (T_{proof} = 1 year), 4.37×10^{-4} (T_{proof} = 2 years), 1.06×10^{-4} (T_{proof} = 5 year)

ACT20X-SAI-HAO-P

Weidmüller Interface GmbH & Co. KG
Klingenbergstraße 26
D-32758 Detmold
Germany

www.weidmueller.com

Technical data

Connection data

Type of connection	PUSH IN	Wire connection cross section AWG, min.	AWG 26
Wire connection cross section AWG, max.	AWG 14	Wire cross-section, solid, min.	0.2 mm²
Wire cross-section, solid, max.	2.5 mm²	Wire connection cross section, finely stranded, min.	0.2 mm²
Wire connection cross section, finely stranded, max.	2.5 mm²	Wire connection cross-section, finely stranded with wire-end ferrules DIN 46228/4, min.	0.2 mm²
Wire connection cross-section, finely stranded with wire-end ferrules DIN 46228/4, max.	2.5 mm²		

Guarantee

Time interval	3 years

Classifications

ETIM 6.0	EC002653	ETIM 7.0	EC002653
ETIM 8.0	EC002653	ETIM 9.0	EC002653
ECLASS 9.0	27-21-01-20	ECLASS 9.1	27-21-01-20
ECLASS 10.0	27-21-01-20	ECLASS 11.0	27-21-01-20
ECLASS 12.0	27-21-01-20	ECLASS 13.0	27-21-01-20
ECLASS 14.0	27-21-01-20		

Environmental Product Compliance

REACH SVHC	Lead 7439-92-1
SCIP	2f6dd957-421a-46db-a0c2-cf1609156924
RoHS Compliance Status	Compliant with exemption
RoHS Exemption (if applicable/known)	7a, 7cl

Approvals

Approvals	
ROHS	Conform
UL File Number Search	UL Website
Certificate no. (cULus)	E337701

ACT20X-SAI-HAO-P

Weidmüller Interface GmbH & Co. KG
Klingenbergstraße 26
D-32758 Detmold
Germany

www.weidmueller.com

Technical data

Downloads

Approval/Certificate/Document of Conformity	Application notes – Certification SIL Certification DNV GL Application notes – Certification ATEX Application notes – Certification IECEx Application notes – Certification UL Declaration of Conformity
Engineering Data	CAD data – STEP
Software	WI-Manager, DTM-Library for online installation Release notes for Weidmueller FDT-DTM Software version
User Documentation	Instruction sheet Safety Manual for SIL application Handbuch ACT20X- Serie, deutsch Manual ACT20X- series, english 20210120 Security Advisory - WI-Manager affected by MundM Software fdtCONTAINER vulnerability
Catalogues	Catalogues in PDF-format

ACT20X-SAI-HAO-P

Weidmüller Interface GmbH & Co. KG
Klingenbergstraße 26
D-32758 Detmold
Germany

www.weidmueller.com

Drawings

Connection diagram

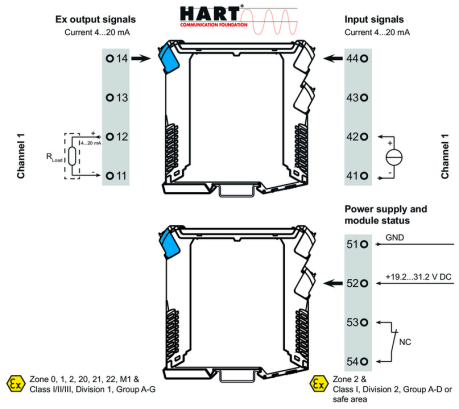

Application

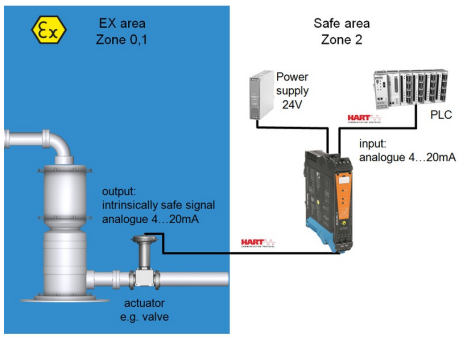

Block diagram

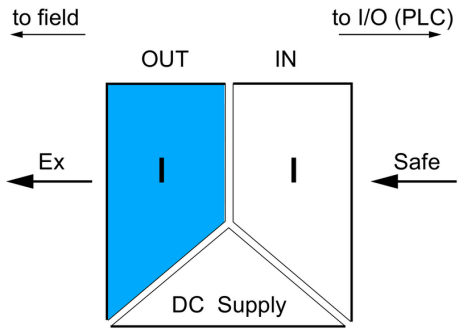

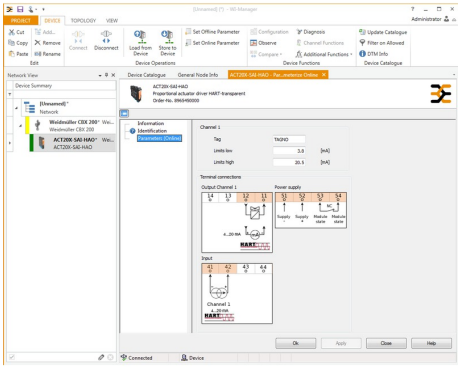

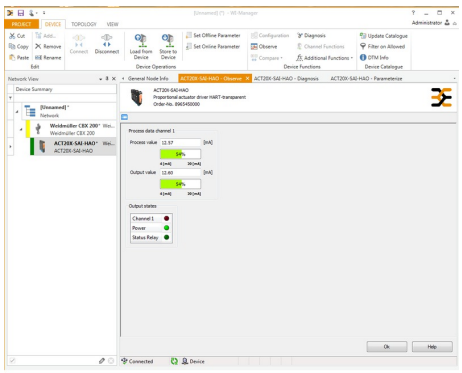

screenshot of configuration with FDT2 / DTM software

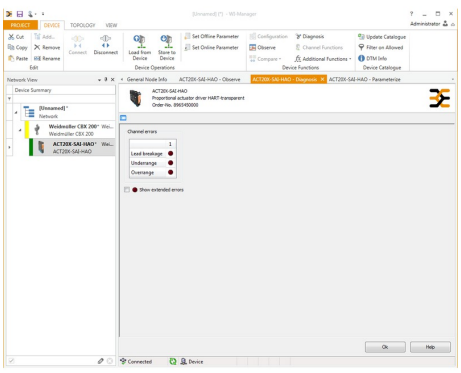

screenshot of "observe" with FDT2 / DTM software

ACT20X-SAI-HAO-P

Weidmüller Interface GmbH & Co. KG
Klingenbergstraße 26
D-32758 Detmold
Germany

www.weidmueller.com

Drawings

Dimensioned drawing

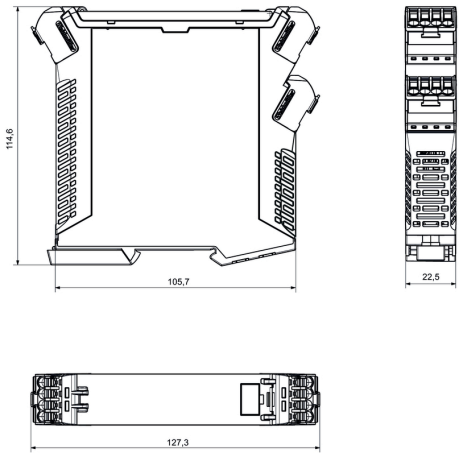



Removable terminals with coding