Powerful Circuit Protection

UL 489 and UL 1077 –
AC/DC Rated Miniature Circuit Breakers

Engineered Protection for Automation and Process Applications
- Thermal magnetic
- Available for B, C or D curve characteristics
- Common amperage values available 1A to 63A (see back page)

Design Flexibility
- 1-, 2- and 3-pole options
- Optional accessory modules for signalling, change-over and remote tripping
- Optional cuttable busbars and busbar accessories

Robust and Reliable
Wide operating temperature from -35°C...+70°C



Easy Accessory Connection
Snap-together construction
(No screws or extra parts needed)

Global Approvals
UL, CSA, IEC, CE



Pharmaceutical and Food



Chemical, Oil and Gas



Automotive Manufacturing



Rail Vehicles

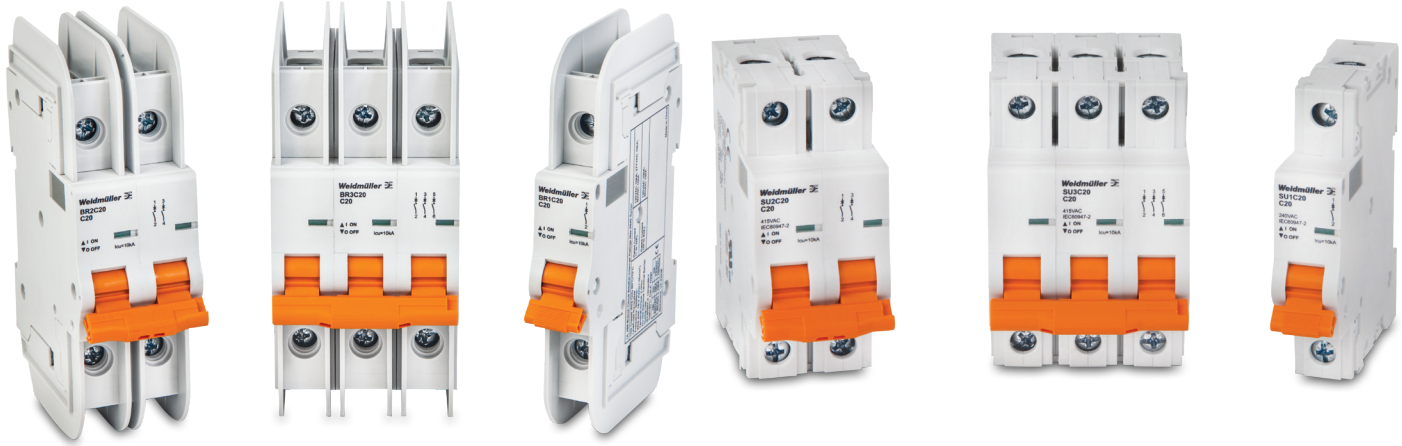

Weidmüller

Part Number Nomenclature

MCB489 or 1077 **2** **D** **60** **AC/DC**

- MCB489= Branch Rated Circuit Breakers
- MCB1077= Supplementary Protectors
- No. of Poles = 1, 2 or 3
- Curve = B, C or D
- Rated Amps = 1, 1.2, 1.5, 1.6, 2, 3, 4, 5, 6, 7, 8, 10, 12, 13, 15, 16, 20, 25, 30, 32, 35, 40, 50, 60, 63
- AC/DC Rated

Sample Part Number

Branch Rated	Description
2477400000	MCB 489 2P B 10A ACDC
Supplementary Protectors	**Description**
2481360000	MCB 1077 3P D 20A ACDC

Sample Cuttable Busbars for UL 489 and UL 1077 Circuit Breakers

No. of Poles	No. of Devices	No. of Pins	Description	Part Number
1-Pole	57	57	MCB BUS BAR UL489 1 POLE 57 PIN	7940099236
			MCB BUS BAR UL1077 1 POLE 57 PIN	7940104909
2-Pole	28	56	MCB BUS BAR UL489 2 POLE 56 PIN	7940104909
			MCB BUS BAR UL1077 2 POLE 56 PIN	7940104909
3-Pole	19	57	MCB BUS BAR UL489 3 POLE 57 PIN	7940104509
			MCB BUS BAR UL1077 3 POLE 57 PIN	7940099418
3-Pole with Auxiliary Module Spacing	16	48	MCB BUS BAR UL489 3 POLE 48 PIN AUX	7940104508
			MCB BUS BAR UL1077 3 POLE 48 PIN AUX	7940104913

Typical Installation

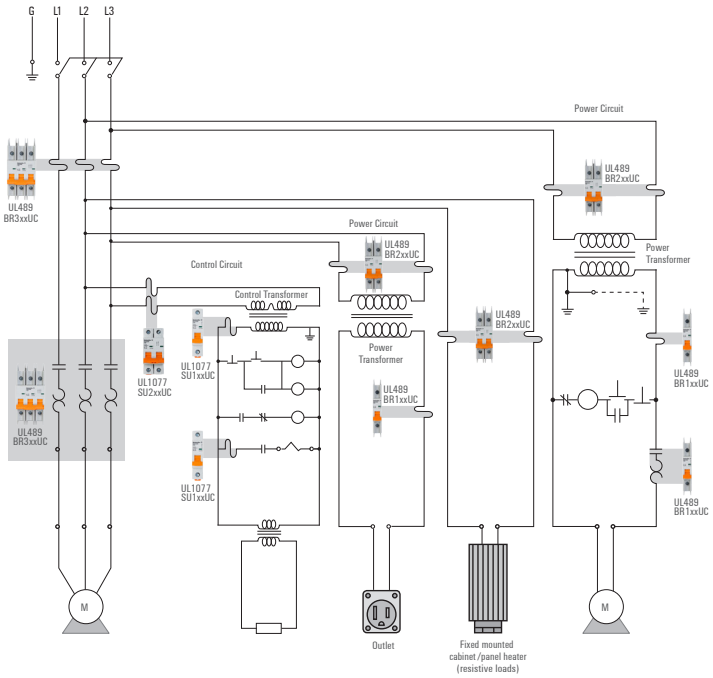

Accessory Modules

Type	Description	Part Number
Auxiliary Contact	MCB AUX Contact 1NC	7940099227
Bell Alarm Contact	MCB Bell Alarm Contact 1NC/1NO	7940099228
Shunt Trip	MCB SHUNT 1NC/1NO 24VDC	7940099319
	MCB SHUNT 1NC/1NO 120VAC	7940104510

Busbar Accessories for UL 489 Cuttable Busbars

Description	Part Number
Feeder Terminal, UL 489, 115 A	7940099232
Endcap for UL 489 Cuttable Busbar	7940099230
Protective Cap for UL 489 cuttable busbar, 3 caps per bar	7940099230
Lock-on, Lock-off Device	7940099734

For UL 1077 Supplementary Busbar Accessories see LIT1617 Product Guide

Information

Information is available for download on the web at **www.weidmuller.com/circuit.**

Ref. No.	Description
LIT1617	MCB ACDC Series Product Guide

Weidmuller, Mexico
Blvd. Hermanos Serdán 698,
Col. San Rafael Oriente
Puebla, Puebla, Mexico
C.P. 72029
Telephone: 01 222 2686267
Facsimile: 01 222 2686219
Email: clientes@weidmuller.com.mx
Website: www.weidmuller.com.mx

Weidmuller, Canada
10 Spy Court
Markham, Ontario L3R 5H6
Telephone: (800) 268-4080
Facsimile: (905) 475-2798
Email: info1@weidmuller.ca
Website: www.weidmuller.ca

Weidmuller, United States
821 Southlake Blvd.
Richmond, Virginia 23236
Telephone: (800) 849-9343
Facsimile: (804) 379-2593
Email: customerservice@weidmueller.com
Website: www.weidmuller.com