BLF/SLF 5.08 ZE06 OR

Weidmüller Interface GmbH & Co. KG
Klingenbergstraße 26
D-32758 Detmold
Germany

www.weidmueller.com



For frequent load changes: the "trailer coupling" for plug-in connectors.
The strain relief can do more than just relieve the strain on conductors:
Simply clip onto the plug and
• bundle conductors
• guide cables
• use as a connection and disconnection aid
No damage to the connecting points, clear, tidy wiring and easy to handle.
User advantages: permanent heavy-duty connections for harsh industrial environments and convenient operation ensure improved system availability.

General ordering data

Version	PCB plug-in connector, Accessories, Strain relief, orange, Number of poles: 6
Order No.	2525780000
Type	BLF/SLF 5.08 ZE06 OR
GTIN (EAN)	4050118536881
Qty.	50 pc(s).
Product data	
Packaging	Box

BLF/SLF 5.08 ZE06 OR

Weidmüller Interface GmbH & Co. KG
Klingenbergstraße 26
D-32758 Detmold
Germany

www.weidmueller.com

Technical data

Dimensions and weights

Depth	37 mm	Depth (inches)	1.457 inch
Height	3.3 mm	Height (inches)	0.13 inch
Width	24.8 mm	Width (inches)	0.976 inch
Net weight	0.92 g		

Material data

Insulating material	PA 66/6	Colour	orange
Colour chart (similar)	RAL 2000	Contact material	Cu-alloy
Storage temperature, min.	-40 °C	Storage temperature, max.	70 °C
Operating temperature, min.	-50 °C	Operating temperature, max.	100 °C
Temperature range, installation, min.	-25 °C	Temperature range, installation, max.	100 °C

Rated data acc. to IEC

tested acc. to standard	IEC 60664-1, IEC 61984

Packing

Packaging	Box	VPE length	142 mm
VPE width	105 mm	VPE height	40 mm

Classifications

ETIM 6.0	EC002943	ETIM 7.0	EC002943
ETIM 8.0	EC002943	ETIM 9.0	EC002943
ECLASS 9.0	27-44-04-92	ECLASS 9.1	27-44-04-92
ECLASS 10.0	27-44-04-92	ECLASS 11.0	27-46-04-02
ECLASS 12.0	27-46-04-02	ECLASS 13.0	27-46-04-02
ECLASS 14.0	27-46-04-02		

Environmental Product Compliance

REACH SVHC	/
RoHS Compliance Status	Compliant without exemption

Important note

IPC conformity	Conformity: The products are developed, manufactured and delivered according international recognized standards and norms and comply with the assured properties in the data sheet resp. fulfill decorative properties in accordance with IPC-A-610 "Class 2". Further claims on the products can be evaluated on request.
Notes	• Long term storage of the product with average temperature of 50 °C and maximum humidity 70%, 36 months

Approvals

ROHS	Conform

Downloads

Engineering Data	CAD data – STEP
Catalogues	Catalogues in PDF-format

BLF/SLF 5.08 ZE06 OR

Weidmüller Interface GmbH & Co. KG
Klingenbergstraße 26
D-32758 Detmold
Germany

www.weidmueller.com

Drawings

Dimensioned drawing

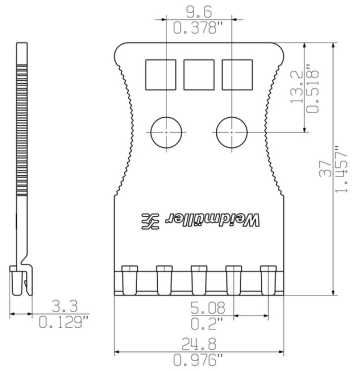

Example of use



Example of use



Example of use

