SV-SMT 7.62HP/02/270MSF2 SC/6 2.6SN BX

Weidmüller Interface GmbH & Co. KG
Klingenbergstraße 26
D-32758 Detmold
Germany

www.weidmueller.com

Product image



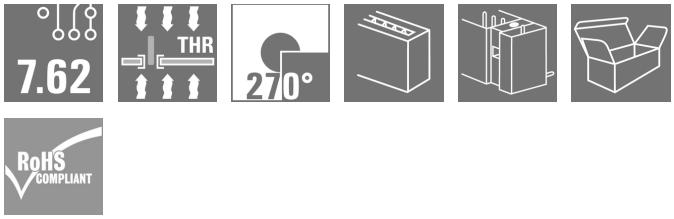

OMNIMATE Power BV / SV 7.62HP Hybrid – for power, signals and EMC
Three functions in one!
The OMNIMATE Power Hybrid connector provides developers and users with the perfect three-in-one solution. This hybrid motor connector simultaneously unites power, signals and pluggable EMC shield support. Thus you save space on the PCB, on the outer side of the housing, and in the electrical cabinet. The self-snapping one-handed interlock mechanism requires only one plugging step and thus speeds up installation and maintenance procedures. It is easy to handle and interlocks automatically – even in difficult installation positions. The unique shielding shape and slender 30° wire entry enable a space savings of up to 10 cm between rows.

General ordering data

Version	PCB plug-in connector, male header, closed side, Middle screw flange, THT/THR solder connection, 7.62 mm, Number of poles: 2, 270°, Solder pin length (l): 2.6 mm, tinned, black, Box
Order No.	2529550000
Type	SV-SMT 7.62HP/02/270MSF2 SC/6 2.6SN BX
GTIN (EAN)	4050118539820
Qty.	54 pc(s).
Product data	IEC: 1000 V / 41 A UL: 300 V / 33 A
Packaging	Box

SV-SMT 7.62HP/02/270MSF2 SC/6 2.6SN BX

Weidmüller Interface GmbH & Co. KG
Klingenbergstraße 26
D-32758 Detmold
Germany

www.weidmueller.com

Technical data

Dimensions and weights

Depth	28.3 mm	Depth (inches)	1.114 inch
Height	14 mm	Height (inches)	0.551 inch
Height of lowest version	11.4 mm	Width	35.26 mm
Width (inches)	1.388 inch	Net weight	3.34 g

System specifications

Product family	OMNIMATE Power - series BV/SV 7.62HP	Type of connection	Board connection
Mounting onto the PCB	THT/THR solder connection	Pitch in mm (P)	7.62 mm
Pitch in inches (P)	0.3 "	Outgoing elbow	270°
Number of poles	2	Number of solder pins per pole	2
Solder pin length (l)	2.6 mm	Solder pin dimensions	0.8 x 1.0 mm
Solder eyelet hole diameter (D)	1.4 mm	Solder eyelet hole diameter tolerance (D)	+ 0,1 mm
L1 in mm	15.24 mm	L1 in inches	0.6 "
L2 in mm	7.62 mm	L2 in inch	0.3 "
Number of rows	1	Pin series quantity	1
Touch-safe protection acc. to DIN VDE 57 106	safe to back of hand above the printed circuit board	Touch-safe protection acc. to DIN VDE 0470	IP 20
Volume resistance	2.00 mΩ	Can be coded	Yes
Tightening torque for screw flange, min.	0.2 Nm	Tightening torque for screw flange, max.	0.3 Nm
Plugging force/pole, max.	12 N	Pulling force/pole, max.	7 N

Material data

Insulating material	PA 9T	Colour	black
Colour chart (similar)	RAL 9011	Insulating material group	I
Comparative Tracking Index (CTI)	≥ 600	Moisture Level (MSL)	1
UL 94 flammability rating	V-0	Contact material	Cu-alloy
Contact surface	tinned	Layer structure of solder connection	1...3 µm Ni / 4...6 µm Sn matt
Layer structure of plug contact	1...3 µm Ni / 4...6 µm Sn matt	Storage temperature, min.	-40 °C
Storage temperature, max.	70 °C	Operating temperature, min.	-50 °C
Operating temperature, max.	130 °C	Temperature range, installation, min.	-25 °C
Temperature range, installation, max.	130 °C		

Rated data acc. to IEC

tested acc. to standard	IEC 60664-1, IEC 61984	Rated current, min. number of poles (Tu=20°C)	41 A
Rated current, max. number of poles (Tu=20°C)	41 A	Rated current, min. number of poles (Tu=40°C)	41 A
Rated current, max. number of poles (Tu=40°C)	41 A	Rated voltage for surge voltage class / pollution degree II/2	1,000 V
Rated voltage for surge voltage class / pollution degree III/2	630 V	Rated voltage for surge voltage class / pollution degree III/3	630 V
Rated impulse voltage for surge voltage class/ pollution degree II/2	6 kV	Rated impulse voltage for surge voltage class/ pollution degree III/2	6 kV
Rated impulse voltage for surge voltage class/ contamination degree III/3	6 kV	Short-time withstand current resistance	3 x 1s with 420 A

SV-SMT 7.62HP/02/270MSF2 SC/6 2.6SN BX

Weidmüller Interface GmbH & Co. KG
Klingenbergstraße 26
D-32758 Detmold
Germany

www.weidmueller.com

Technical data

Rated data acc. to UL 1059

Institute (cURus)		Certificate No. (cURus)	E60693
Rated voltage (Use group B / UL 1059)	300 V	Rated voltage (Use group C / UL 1059)	300 V
Rated voltage (Use group D / UL 1059)	600 V	Rated current (Use group B / UL 1059)	33 A
Rated current (Use group C / UL 1059)	33 A	Rated current (Use group D / UL 1059)	5 A
Clearance distance, min.	6.9 mm	Creepage distance, min.	9.6 mm
Reference to approval values	Specifications are maximum values, details - see approval certificate.		

Packing

Packaging	Box	VPE length	338 mm
VPE width	130 mm	VPE height	33 mm

Technical data - hybrid

Pitch in mm (hybrid)	Hybrid component	Signal	
	nominal	3.81 mm	
Pitch in mm (Signal)	3.81 mm		
Pitch in inch (hybrid)	nominal	0.15 "	
	Hybrid component	Signal	
Pitch in inches (Signal)	0.15 "		
Pole count (hybrid)	nominal	6	
	Hybrid component	Signal	
Number of poles (Signal)	6		
Number of solder pins per pole (hybrid)	Hybrid component	Signal	
	nominal	1	
Number of solder pins per pole (Signal)	1		
Solder pin dimensions (hybrid)	Solder pin dimensions	0.8 x 0.8 mm	
	Hybrid component	Signal	
Solder pin dimensions (Signal)	0.8 x 0.8 mm		
Solder pin dimensions = d tolerance (hybrid)	Hybrid component	Signal	
	Solder pin dimensions = d tolerance	Lower tolerance with prefix (reveals minimum)	-0,03
		Upper tolerance with prefix (reveals maximum)	+0,01
		Tolerance, unit	mm
Solder pin dimensions = d tolerance (Signal)	-0,03 / +0,01 mm		
Diameter of solder eyelet (hybrid)	Hybrid component	Signal	
	nominal	1.3 mm	
PCB hole diameter (Signal)	1.3 mm		
Tolerance of the diameter of the solder eyelet (hybrid)	Hybrid component	Signal	
	Solder eyelet hole diameter tolerance (D)	± 0.1 mm	
PCB hole diameter tolerance (Signal)	± 0.1 mm		
L2 in mm	7.62 mm		
L2 in inch	0.3 "		
Number of rows (hybrid)	Hybrid component	Signal	
Number of rows (Signal)	2		

SV-SMT 7.62HP/02/270MSF2 SC/6 2.6SN BX

Weidmüller Interface GmbH & Co. KG
Klingenbergstraße 26
D-32758 Detmold
Germany

www.weidmueller.com

Technical data

Contact material (hybrid)	Hybrid component	Signal		
	Contact material	CuMg		
Contact material (Signal)	CuMg			
Contact surface (hybrid)	Hybrid component	Signal		
	Contact surface	tinned		
Contact surface (Signal)	tinned			
Layer structure of the solder connection (hybrid)	Hybrid component	Signal		
	Layer structure of the solder connection	Layer strength	min.	1 µm
			max.	3 µm
		Material	Ni	
		Layer strength	min.	4 µm
			max.	8 µm
		Material	Sn	
Layer structure of the solder connection (Signal)	1-3 µm Ni / 4-8 µm Sn			
Layer structure of the plug contact (hybrid)	Layer structure of the plug contact	Material	Ni	
		Layer strength	min.	1 µm
			max.	3 µm
		Material	Sn	
		Layer strength	min.	4 µm
			max.	8 µm
	Hybrid component	Signal		
Layer structure of the plug contact (Signal)	1-3 µm Ni / 4-8 µm Sn			
Rated voltage for overvoltage class / pollution severity level II/2 (hybrid)	Hybrid component	Signal		
	nominal	320 V		
Rated voltage for overvoltage class/pollution severity level II/2 (Signal)	320 V			
Rated voltage for overvoltage class / pollution severity level III/2 (hybrid)	Hybrid component	Signal		
	nominal	160 V		
Rated voltage for overvoltage class/pollution severity level III/2 (Signal)	160 V			
Rated voltage for overvoltage class / pollution severity level III/3 (hybrid)	Hybrid component	Signal		
	nominal	160 V		
Rated voltage for overvoltage class/pollution severity level III/3 (Signal)	160 V			
Rated impulse voltage for overvoltage class / pollution severity level II/2 (hybrid)	Hybrid component	Signal		
	nominal	2.5 kV		
Rated impulse voltage for overvoltage class/pollution severity level II/2 (Signal)	2.5 kV			
Rated impulse voltage for overvoltage class / pollution severity level III/2 (hybrid)	Hybrid component	Signal		
	nominal	2.5 kV		
Rated impulse voltage for overvoltage class/pollution severity level III/2 (Signal)	2.5 kV			
Rated impulse voltage for overvoltage class / pollution severity level III/3 (hybrid)	Hybrid component	Signal		
	nominal	2.5 kV		
Rated impulse voltage for overvoltage class/pollution severity level III/3 (Signal)	2.5 kV			
Short-time withstand current capacity (hybrid)	Short-time withstand current resistance	3 x 1s with 80 A		
	Hybrid component	Signal		
Short-time withstand current resistance (Signal)	3 x 1s with 80 A			
Creepage distance (hybrid)	Hybrid component	Signal		
	min.	4.38 mm		

SV-SMT 7.62HP/02/270MSF2 SC/6 2.6SN BX

Weidmüller Interface GmbH & Co. KG
Klingenbergstraße 26
D-32758 Detmold
Germany

www.weidmueller.com

Technical data

Clearance distance (hybrid)	Hybrid component	Signal
	min.	3.6 mm
Rated voltage (Use group B / CSA) (Hybrid)	Hybrid component	Signal
	nominal	300 V
Rated voltage (Use group B / CSA) (Signal)	300 V	
Rated voltage (Use group C / CSA) (Hybrid)	Hybrid component	Signal
	nominal	50 V
Rated voltage (Use group C / CSA) (Signal)	50 V	
Rated current (Use group B / CSA) (Hybrid)	Hybrid component	Signal
	nominal	9 A
Rated current (Use group B / CSA) (Signal)	9 A	
Rated current (Use group C / CSA) (Hybrid)	Hybrid component	Signal
	nominal	9 A
Rated current (Use group C / CSA) (Signal)	9 A	
Rated current (Use group D / CSA) (Hybrid)	Hybrid component	Signal
	nominal	9 A
Rated current (Use group D / CSA) (Signal)	9 A	
Rated voltage (Use group B / UL 1059) (Hybrid)	Hybrid component	Signal
	nominal	300 V
Rated voltage (Use group B / UL 1059] (Signal)	300 V	
Rated voltage (Use group C / UL 1059) (Hybrid)	Hybrid component	Signal
	nominal	50 V
Rated voltage (Use group C / UL 1059] (Signal)	50 V	
Rated voltage (Use group D / UL 1059) (Hybrid)	Hybrid component	Signal
	nominal	300 V
Rated voltage (Use group D / UL 1059] (Signal)	300 V	
Rated current (Use group B / UL 1059) (Hybrid)	Hybrid component	Signal
	nominal	5 A
Rated current (Use group B / UL 1059) (Signal)	5 A	
Rated current (Use group C / UL 1059) (Hybrid)	Hybrid component	Signal
	nominal	5 A
Rated current (Use group C / UL 1059) (Signal)	5 A	
Rated current (Use group D / UL 1059) (Hybrid)	Hybrid component	Signal

Classifications

ETIM 6.0	EC002637	ETIM 7.0	EC002637
ETIM 8.0	EC002637	ETIM 9.0	EC002637
ECLASS 9.0	27-44-04-02	ECLASS 9.1	27-44-04-02
ECLASS 10.0	27-44-04-02	ECLASS 11.0	27-46-02-01
ECLASS 12.0	27-46-03-01	ECLASS 13.0	27-46-03-01
ECLASS 14.0	27-46-03-01		

Environmental Product Compliance

REACH SVHC	/
RoHS Compliance Status	Compliant without exemption

Creation date August 19, 2024 8:25:59 AM CEST

SV-SMT 7.62HP/02/270MSF2 SC/6 2.6SN BX

Weidmüller Interface GmbH & Co. KG
Klingenbergstraße 26
D-32758 Detmold
Germany

www.weidmueller.com

Technical data

Important note

IPC conformity	Conformity: The products are developed, manufactured and delivered according international recognized standards and norms and comply with the assured properties in the data sheet resp. fulfill decorative properties in accordance with IPC-A-610 "Class 2". Further claims on the products can be evaluated on request.
Notes	• Technical specifications refer to the power contacts • Technical data of signal contacts: 50V / 5A, stripping length 8mm • Rated current related to rated cross-section & min. No. of poles. • Specifications of diagram: P1=7.62 mm; P2=3.81 mm • Rated data refer only to the component itself. Clearance and creepage distances to other components are to be designed in accordance with the relevant application standards. • MFX and MSFX: X= Position of the middle flange e.g. MF2, MSF3 • In accordance with IEC 61984, OMNIMATE-connectors are connectors without breaking capacity (COC). During designated use, connectors are not allowed to be engaged or disengaged when live or under load • Long term storage of the product with average temperature of 50 °C and maximum humidity 70%, 36 months

Approvals

Approvals	c UL us
ROHS	Conform
UL File Number Search	UL Website
Certificate No. (cURus)	E60693

Downloads

Engineering Data	CAD data – STEP
Product Change Notification	20220105 Material change SV-SMT 7.62 20220105 Materialänderung SV-SMT
Catalogues	Catalogues in PDF-format

SV-SMT 7.62HP/02/270MSF2 SC/6 2.6SN BX

Weidmüller Interface GmbH & Co. KG
Klingenbergstraße 26
D-32758 Detmold
Germany

www.weidmueller.com

Drawings

Product image

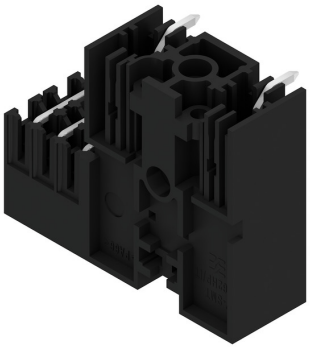

Dimensional drawing

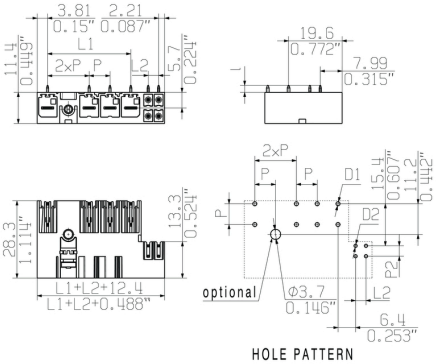

The reproduction, distribution and utilization of this document as well as the communication of its contents to others without explicit authorization is prohibited.
Offenders will be held liable for the payment of damages. Weidmueller exclusively reserves the right to file for patents, utility models or designs.
© Weidmueller Interface GmbH & Co. KG

SV-SMT 7.62HP/04/270M(S)F...SC04

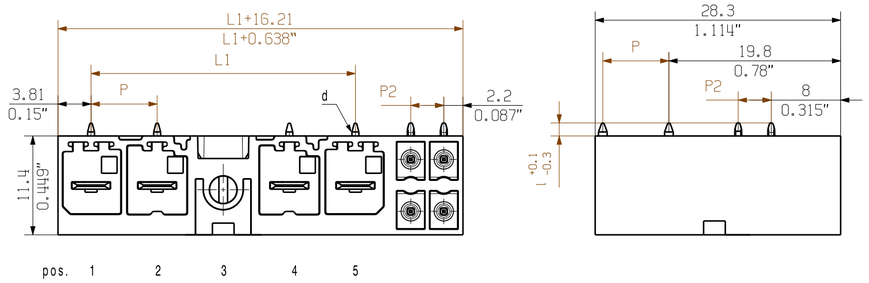

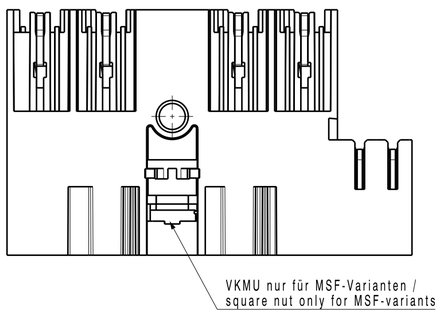

1:1

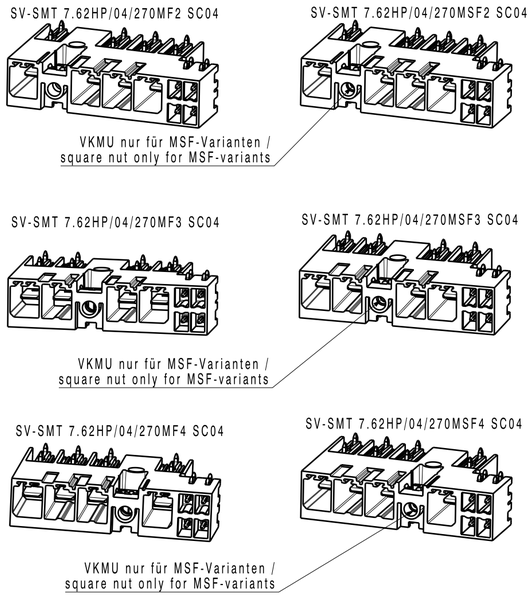

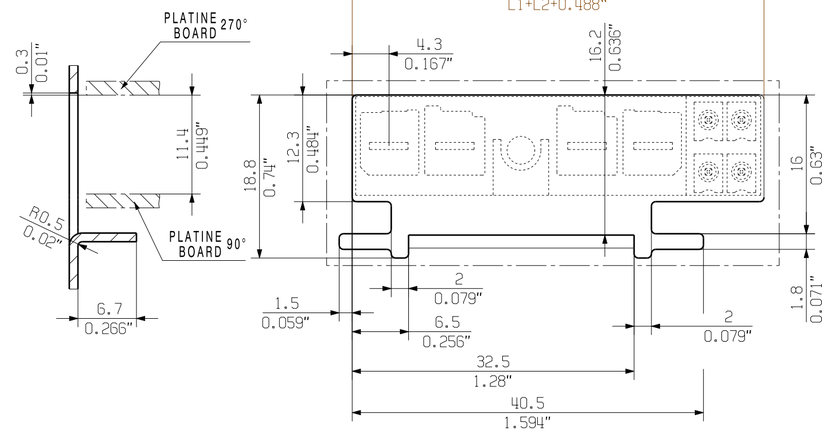

MIN. FRONT PLATE CUT-OUT

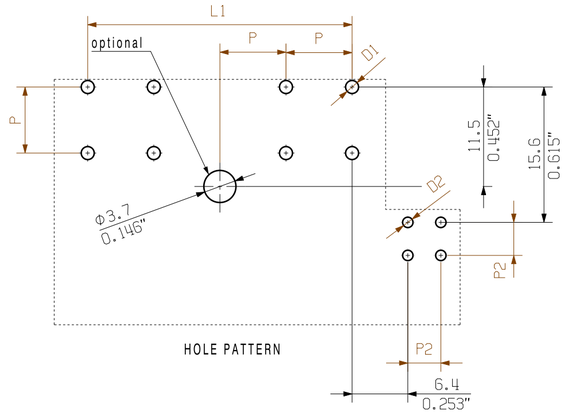

HOLE PATTERN

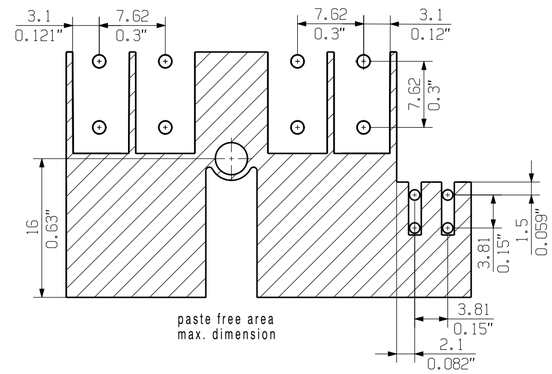

paste free area
max. dimension

D1 = Ø1.4+0.1/-0.05
D2 = Ø1.2+0.1/-0.05
d = 0.8x1.0

P = Raster/pitch 7.62
P2 = Raster/pitch 3.81

MF= Mittelflansch
middle flange

MSF= Mittelschraubflansch
middle flange with screw

GENERAL TOLERANCE:
DIN ISO 2768-m

05 M(S)F 4	38.1	1.495	POL	POL	POL	M(S)F	POL	POL
05 M(S)F 3	38.1	1.495	POL	POL	M(S)F	POL	POL	POL
04 M(S)F 4	30.48	1.196	POL	POL	POL	M(S)F	POL	
04 M(S)F 3	30.48	1.196	POL	POL	M(S)F	POL	POL	
03 M(S)F 3	22.86	0.897	POL	POL	M(S)F	POL		
03 M(S)F 2	22.86	0.897	POL	M(S)F	POL	POL		
02 M(S)F 2	15.24	0.598	POL	M(S)F	POL			
no of poles	L1 [mm]	L1 [inch]	1	2	3	4	5	6
			POSITION					

1.5
2.6
3.5
I [mm]

For the mounting of PCBs, it should be noted that the rated data relates only to the PCB components alone.
The neccessary creepage and clearance paths must be observed in connection with the respective applicant in accordance to IEC 664 / VDE 0110.
The current-carrying capacity and pitch tolerance is to be determined according to DIN IEC 326 part 3 very fine.

Weidmüller PCB components are tested to the DIN EN 61984 standard, and are valid for its field of application. Provided that the components are used to the intended purpose, all requirements with respect to the occuring of electrical, mechanical, thermic and corrosive stress will be satisfied.

RoHS COMPLIANT
EC00002212
First Issue Date 14.11.2016
Max. nos.
Modification

Prim PLM Part No.: 225880
Prim ERP Part No.: 2499550000

Weidmüller
63450 (Drawing no.) 4 (Issue no.)
Sheet 17 of 17 sheets

	Date	Name
Drawn	30.08.2019	Helis, Maria
Responsible		Döhrer, Karl
Approved	09.10.2019	Lang, Thomas

Scale: 2:1 Size: A2
Drawings Assembly

SV-SMT 7.62HP/IT/../90/270...
STISTLEISTE
MALE HEADER
Product file: 7407 BLF 7.50HP

Wave Solder Profile

Recommended wave solderding profiles

Weidmüller Interface GmbH & Co. KG
Klingenbergstraße 16
D-32758 Detmold
Germany
Fon: +49 5231 14-0
Fax: +49 5231 14-292083
www.weidmueller.com

Single Wave:

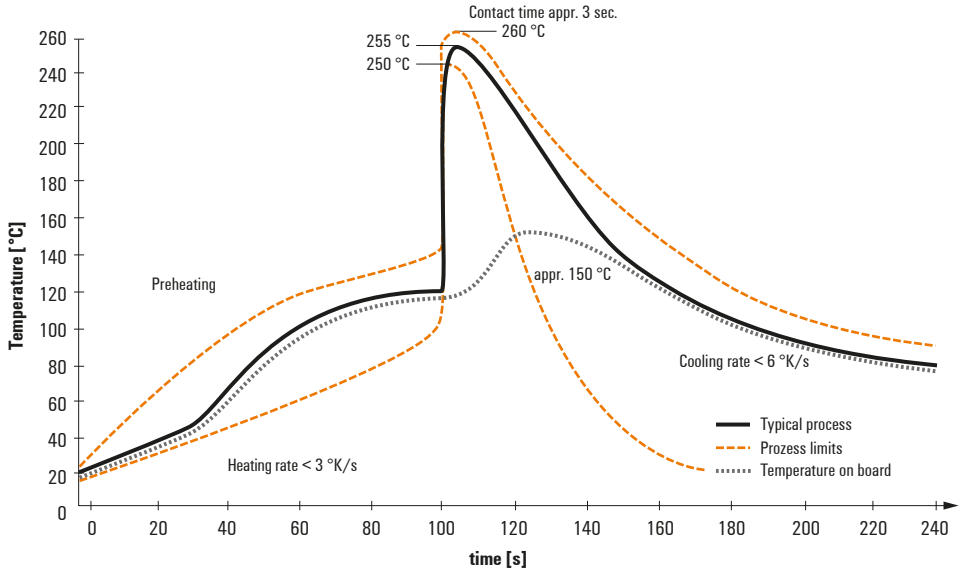

Double Wave:

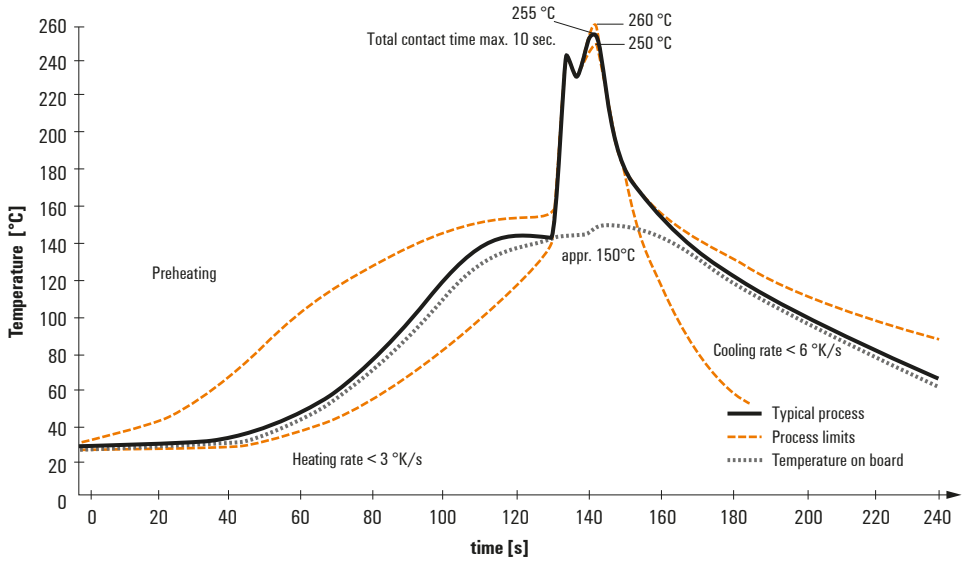

Wave soldering profiles

Wired connection elements should be processed in accordance with the DIN EN 61760-1 standard. We have included two recommendations for practical wave soldering profiles, with which Weidmüller PCB terminals and connectors are qualified.

When choosing a suitable profile for your application, the following factors also need to be considered:
- PCB thickness
- Proportion of Cu in the layers
- Single/double-sided assembly
- Product range
- Heating and cooling rates

The single and double wave profiles each indicate the recommended operating range, including the maximum soldering temperature of 260°C. In practice, the maximum soldering temperature is quite often well below the above maximum profile.

We reserve the right to make technical changes.

Reflow Solder Profile

Recommended reflow soldering profile

Weidmüller Interface GmbH & Co. KG
Klingenbergstraße 16
D-32758 Detmold
Germany
Fon: +49 5231 14-0
Fax: +49 5231 14-292083
www.weidmueller.com

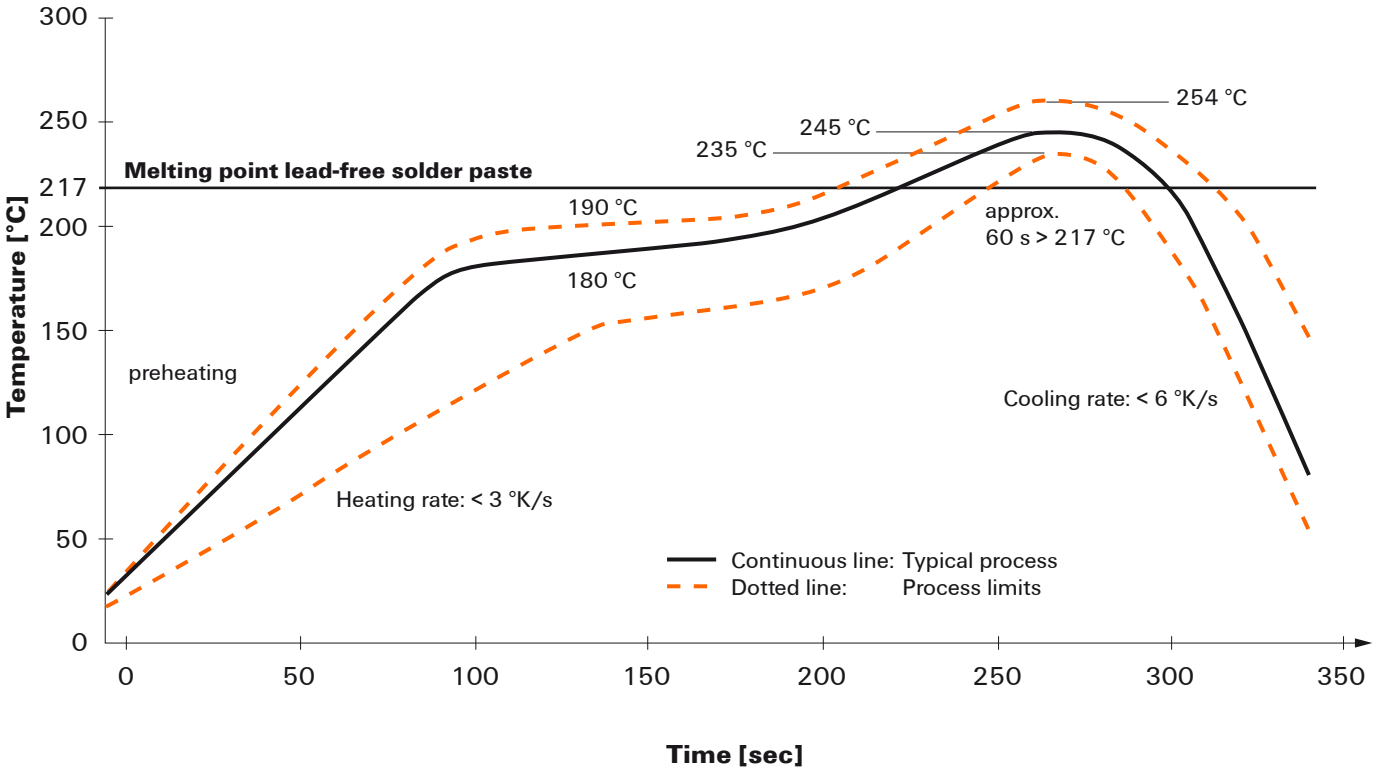

Reflow soldering profile

The perfect soldering profile for SMT Surface Mount Technology is one the most exiting question in SMT production. But there are more than one correct answer: The diagram of temperature-on-time is related to processing features of solder paste and to maximum load of components.

We have to consider the following parameters:
- Time for pre heating
- Maximum temperature
- Time above melting point
- Time for cooling
- Maximum heating rate
- Maximum cooling rate

We recommend a typical solder profile with associated process limits. With preheating components and board are prepared smoothly for the solder phase. Heating rate is typically ≤ +3K/s. In parallel the solder paste is ‚activated'. The time above melting point of 217°C the paste gets liquid and components and boards begin to connect. The maximum temperature of 245°C to 254°C should stay between 10 and 40 seconds. In the cooling phase at ≥ -6K/s solder is cured. Board and components cool down while avoiding cold cracks.

We reserve the right to make technical changes.