AP 45/RE GN

Weidmüller Interface GmbH & Co. KG
Klingenbergstraße 26
D-32758 Detmold
Germany

www.weidmueller.com

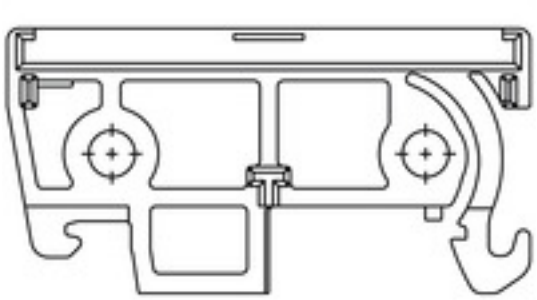

Flexible - More flexible - Profilform

Modular housings in profile form - the flexible modular system comprising coloured and transparent plastic profiles and carrier modules
The combination of standard pitches mounted side by side in any arrangement and metre goods cut accurate to the millimetre creates the perfect balance between flexibility and economic efficiency:

- Pitch profiles with standard widths ranging from 5mm to 45mm allow the mounting of all standard PCB formats.
- Variable heights ensure maximum component density, even with larger electronics components.
- The different installation variations mean that mounting the enclosure directly is as easy as clipping components onto the terminal rail
- Solid hoods protect the module reliably from external influences

The recipe for success: variable profile + modular form components = flexible enclosure concept that offers a large surface area for the PCBs.
The modular concept is designed for modules with high space requirements and suitable for small component quantities and different widths.

General ordering data

Version	Mounting rail housing green, End plate DIN mounting rail right, Width: 8 mm
Order No.	2549680000
Type	AP 45/RE GN
GTIN (EAN)	4050118594713
Qty.	20 pc(s).

AP 45/RE GN

Weidmüller Interface GmbH & Co. KG
Klingenbergstraße 26
D-32758 Detmold
Germany

www.weidmueller.com

Technical data

Dimensions and weights

Height	22.8 mm	Height (inches)	0.898 inch
Width	8 mm	Width (inches)	0.315 inch
Length	45 mm	Length (inches)	1.772 inch
Net weight	2.34 g		

Material data

Comparative Tracking Index (CTI)	600 ≤ CTI	Insulating material	PA 66
Insulating material group	I	UL 94 flammability rating	V-2

General data

Colour	green	Colour chart (similar)	RAL 6032
Encapsulation option	No	Protection degree	IP00
Rail	TS 32, TS 35		

Classifications

ETIM 7.0	EC001031	ETIM 8.0	EC001031
ETIM 9.0	EC002779	ECLASS 11.0	27-18-27-92
ECLASS 12.0	27-18-27-92	ECLASS 13.0	27-19-06-02
ECLASS 14.0	27-19-06-02		

Environmental Product Compliance

REACH SVHC	/
RoHS Compliance Status	Compliant without exemption

Important note

Product information	The article will soon no longer be available. Please do not carry out any further design-ins. The RS 70 and RS 100 profile series can be used as an alternative.

Approvals

ROHS	Conform

Downloads

Engineering Data	CAD data – STEP
Catalogues	Catalogues in PDF-format

AP 45/RE GN

Weidmüller Interface GmbH & Co. KG
Klingenbergstraße 26
D-32758 Detmold
Germany

www.weidmueller.com

Drawings

