SU 10.16HP/05/270MF4 3.5AG BK BX

Weidmüller Interface GmbH & Co. KG
Klingenbergstraße 26
D-32758 Detmold
Germany

www.weidmueller.com

Product image



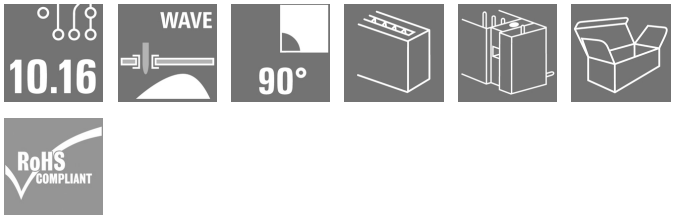

Single-row, high-performance male header for side-by-side mounting without sacrificing any poles or with patented flange for fast fixing without tools. Maximum connection and operating reliability thanks to a mating profile that prevents incorrect connection, with unique coding diversity and additional fastening in the flange. 3.5 mm pin length is optimised for wave soldering, plug-in direction 270° to solder pins.

General ordering data

Version	PCB plug-in connector, male header, THT solder connection, 10.16 mm, Number of poles: 5, 270°, Solder pin length (l): 3.5 mm, tinned, black, Box
Order No.	2597330000
Type	SU 10.16HP/05/270MF4 3.5AG BK BX
GTIN (EAN)	4050118609493
Qty.	30 pc(s).
Product data	IEC: 1000 V / 78.3 A UL: 300 V / 60 A
Packaging	Box

Creation date August 19, 2024 4:47:55 AM CEST

SU 10.16HP/05/270MF4 3.5AG BK BX

Weidmüller Interface GmbH & Co. KG
Klingenbergstraße 26
D-32758 Detmold
Germany

www.weidmueller.com

Technical data

Dimensions and weights

Net weight	21.41 g

System specifications

Product family	OMNIMATE Power - series BU/SU 10.16HP
Type of connection	Board connection
Mounting onto the PCB	THT solder connection
Pitch in mm (P)	10.16 mm
Pitch in inches (P)	0.4 "
Outgoing elbow	270°
Number of poles	5
Solder pin length (l)	3.5 mm
Solder pin length tolerance	+0.1 / -0.3 mm
Solder pin dimensions	1.2 x 1.1 mm
Solder pin dimensions = d tolerance	+0.1 / -0.1 mm
L1 in mm	40.64 mm
L1 in inches	1.6 "
Pin series quantity	2

Tightening torque

Torque type	Mounting screw, PCB		
Usage information	Thickness	min.	1.44 mm
		max.	1.76 mm
	Tightening torque	min.	0.25 Nm
		max.	0.3 Nm
	Recommended screw	Part number	SU 10.16 BFSC P 35X 14
	Thickness	min.	2.88 mm
		max.	3.52 mm
	Tightening torque	min.	0.2 Nm
		max.	0.25 Nm
	Recommended screw	Part number	SU 10.16 BFSC P 35X 14
	Thickness	min.	1.44 mm
		max.	3.52 mm
	Tightening torque	min.	0.8 Nm
		max.	0.9 Nm
	Recommended screw	Part number	SU 10.16 BFSC S 35X12

Material data

Insulating material	PBT GF	Colour	black
Colour chart (similar)	RAL 9011	UL 94 flammability rating	V-0
Contact material	Cu-alloy	Contact surface	tinned
Storage temperature, min.	-40 °C	Storage temperature, max.	70 °C
Operating temperature, min.	-50 °C	Operating temperature, max.	120 °C
Temperature range, installation, min.	-25 °C	Temperature range, installation, max.	120 °C

SU 10.16HP/05/270MF4 3.5AG BK BX

Weidmüller Interface GmbH & Co. KG
Klingenbergstraße 26
D-32758 Detmold
Germany

www.weidmueller.com

Technical data

Rated data acc. to IEC

Rated current, min. number of poles (Tu=20°C)	78.3 A	Rated current, max. number of poles (Tu=20°C)	67.9 A
Rated current, min. number of poles (Tu=40°C)	70.6 A	Rated current, max. number of poles (Tu=40°C)	61.3 A
Rated voltage for surge voltage class / pollution degree II/2	1,000 V	Rated voltage for surge voltage class / pollution degree III/2	1,000 V
Rated voltage for surge voltage class / pollution degree III/3	690 V	Rated impulse voltage for surge voltage class/ pollution degree II/2	6 kV
Rated impulse voltage for surge voltage class/ pollution degree III/2	8 kV	Rated impulse voltage for surge voltage class/ contamination degree III/3	8 kV
Clearance, min.	8.9 mm	Creepage distance, min.	10.5 mm

Rated data acc. to CSA

Rated voltage (Use group B / CSA)	300 V	Rated voltage (Use group C / CSA)	300 V
Rated voltage (Use group D / CSA)	600 V	Rated current (Use group B / CSA)	60 A
Rated current (Use group C / CSA)	60 A	Rated current (Use group D / CSA)	5 A

Rated data acc. to UL 1059

Rated voltage (Use group B / UL 1059)	300 V	Rated voltage (Use group C / UL 1059)	300 V
Rated voltage (Use group D / UL 1059)	600 V	Rated current (Use group B / UL 1059)	60 A
Rated current (Use group C / UL 1059)	60 A	Rated current (Use group D / UL 1059)	5 A
Clearance distance, min.	8.9 mm	Creepage distance, min.	10.5 mm

Packing

Packaging	Box	VPE length	338 mm
VPE width	130 mm	VPE height	44 mm

Classifications

ETIM 6.0	EC002637	ETIM 7.0	EC002637
ETIM 8.0	EC002637	ETIM 9.0	EC002637
ECLASS 9.0	27-44-04-02	ECLASS 9.1	27-44-04-02
ECLASS 10.0	27-44-04-02	ECLASS 11.0	27-46-02-01
ECLASS 12.0	27-46-02-01	ECLASS 13.0	27-46-02-01
ECLASS 14.0	27-46-02-01		

Environmental Product Compliance

REACH SVHC	/
RoHS Compliance Status	Compliant without exemption

SU 10.16HP/05/270MF4 3.5AG BK BX

Weidmüller Interface GmbH & Co. KG
Klingenbergstraße 26
D-32758 Detmold
Germany

www.weidmueller.com

Technical data

Important note

IPC conformity	Conformity: The products are developed, manufactured and delivered according international recognized standards and norms and comply with the assured properties in the data sheet resp. fulfill decorative properties in accordance with IPC-A-610 "Class 2". Further claims on the products can be evaluated on request.
Notes	• Additional variants on request • Rated current related to rated cross-section & min. No. of poles. • P on drawing = pitch • Rated data refer only to the component itself. Clearance and creepage distances to other components are to be designed in accordance with the relevant application standards. • For all applications with flange we recommend to fix the pin header with the help of the soldering flange or a self-tapping screw on the board. • In accordance with IEC 61984, OMNIMATE-connectors are connectors without breaking capacity (COC). During designated use, connectors are not allowed to be engaged or disengaged when live or under load • Long term storage of the product with average temperature of 50 °C and maximum humidity 70%, 36 months

Approvals

ROHS	Conform

Downloads

Engineering Data	CAD data – STEP
Catalogues	Catalogues in PDF-format

SU 10.16HP/05/270MF4 3.5AG BK BX

Weidmüller Interface GmbH & Co. KG
Klingenbergstraße 26
D-32758 Detmold
Germany

www.weidmueller.com

Drawings

Product image

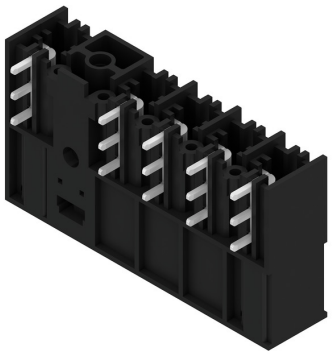

Dimensional drawing

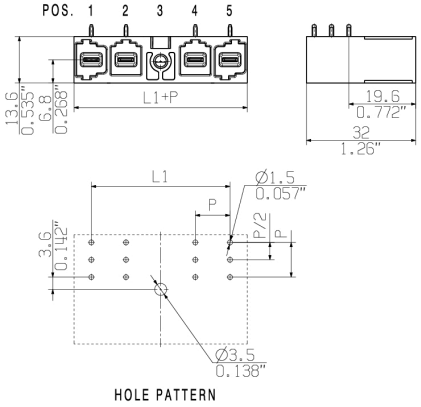

Graph

6	M(S)F6	o	o	o	o	o	X	o
6	M(S)F5	o	o	o	o	X	o	o
6	M(S)F4	o	o	o	X	o	o	o
6	M(S)F3	o	o	X	o	o	o	o
6	M(S)F2	o	X	o	o	o	o	o
5	M(S)F5	o	o	o	o	X	o	
5	M(S)F4	o	o	o	X	o	o	
5	M(S)F3	o	o	X	o	o	o	
5	M(S)F2	o	X	o	o	o	o	
4	M(S)F4	o	o	o	X	o		
4	M(S)F3	o	o	X	o	o		
4	M(S)F2	o	X	o	o	o		
3	M(S)F3	o	o	X	o			
3	M(S)F2	o	X	o	o			
2	M(S)F2	o	X	o				
No of poles	X = middle flange position	1	2	3	4	5	6	7

Example of use

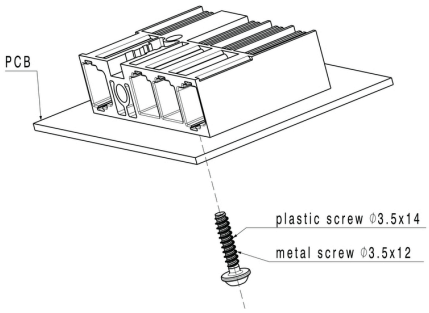

Wave Solder Profile

Recommended wave solderding profiles

Weidmüller Interface GmbH & Co. KG
Klingenbergstraße 16
D-32758 Detmold
Germany
Fon: +49 5231 14-0
Fax: +49 5231 14-292083
www.weidmueller.com

Single Wave:

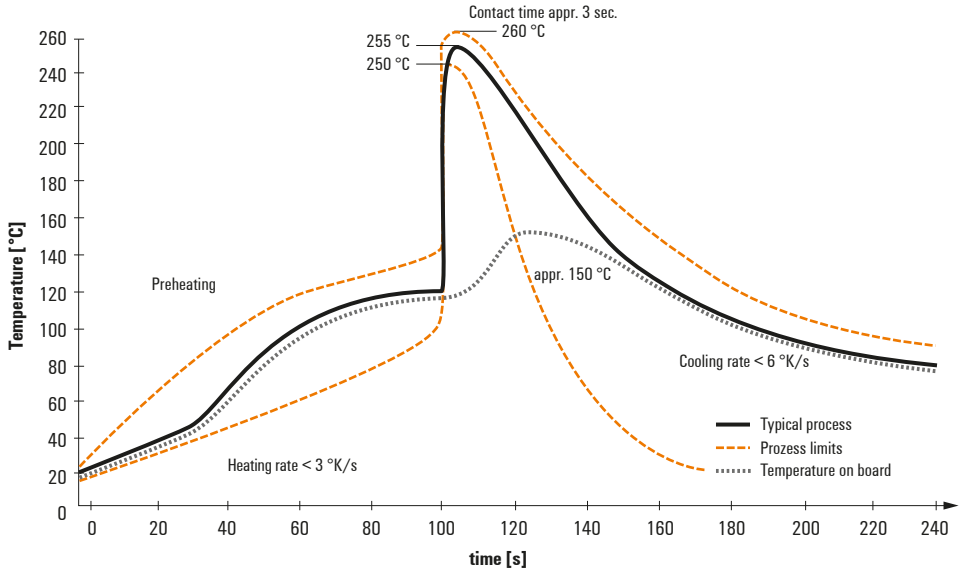

Double Wave:

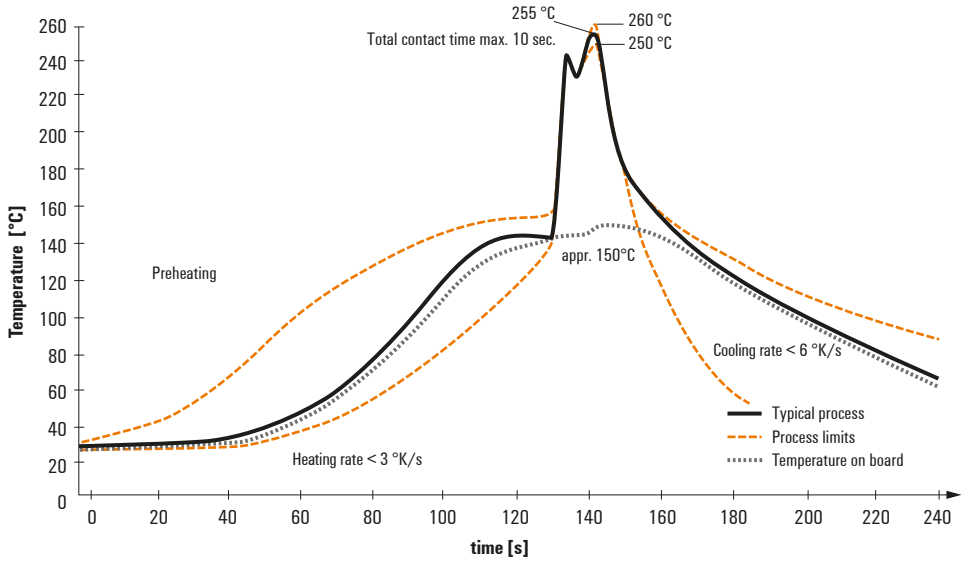

Wave soldering profiles

Wired connection elements should be processed in accordance with the DIN EN 61760-1 standard. We have included two recommendations for practical wave soldering profiles, with which Weidmüller PCB terminals and connectors are qualified.

When choosing a suitable profile for your application, the following factors also need to be considered:
- PCB thickness
- Proportion of Cu in the layers
- Single/double-sided assembly
- Product range
- Heating and cooling rates

The single and double wave profiles each indicate the recommended operating range, including the maximum soldering temperature of 260°C. In practice, the maximum soldering temperature is quite often well below the above maximum profile.

We reserve the right to make technical changes.