D-SUB M6.3 T25HB 3.2B4 TY BK

Weidmüller Interface GmbH & Co. KG
Klingenbergstraße 26
D-32758 Detmold
Germany

www.weidmueller.com





The product range encompasses the following designs:

- 90°, lying (horizontal) and 180°, standing (vertical)
- Flange design as drilled hole, UNC 4-40 threaded nut and UNC 4-40 threaded bolt
- Stamped contacts (Rated current: 3 A)
- THT soldering process
- Wide range of different design types, also with snap-on clip
- Packed in tray (TY)
- Extended temperature range of –55 °C to +85 °C for maximum performance
- Design in accordance with IEC 60807-3 (IEC 807-3) and DIN 41652

General ordering data

Version	OMNIMATE Data - D-SUB connector, male header, Thread-bolt UNC 4-40, THT solder connection, Pitch in mm (P): 2.77 mm, Number of poles: 25, ≥ 50 µ" Ni / 100 µ" Sn , 500, PBT GF, black, Tray
Order No.	2701760000
Type	D-SUB M6.3 T25HB 3.2B4 TY BK
GTIN (EAN)	4050118809787
Qty.	50 pc(s).
Packaging	Tray
Delivery status	This article will no longer be available in the future.
Available until	2024-08-31

D-SUB M6.3 T25HB 3.2B4 TY BK

Weidmüller Interface GmbH & Co. KG
Klingenbergstraße 26
D-32758 Detmold
Germany

www.weidmueller.com

Technical data

Dimensions and weights

Depth	18.6 mm	Depth (inches)	0.732 inch
Height	12.55 mm	Height (inches)	0.494 inch
Width	53.04 mm	Width (inches)	2.088 inch
Net weight	16 g		

System specifications

Mounting onto the PCB	THT solder connection	Number of poles	25
Outgoing elbow	90°	Pitch in inches (P)	0.109 "
Pitch in mm (P)	2.77 mm	Plugging cycles	500
Product family	OMNIMATE Data - D-SUB connector	Shield surface	tinned
Shielding material	Steel	Side termination, characteristic	Thread-bolt UNC 4-40
Solder pin dimensions	Octagonal	Solder pin length (l)	3.2 mm
Soldering process	Manual soldering, Wave soldering	Tolerance of solder pin position	± 0.15 mm
Type of connection	Solder connection		

Electrical properties

Dielectric strength, contact / contact	1000 V AC	Insulation strength	≥ 1000 MΩ
Rated current	3 A	Rated voltage	250 V

Material data

Insulating material	PBT GF	Colour	black
Colour chart (similar)	RAL 9011	Insulation strength	≥ 1000 MΩ
UL 94 flammability rating	V-0	Contact base material	Cu-alloy
Contact material	Cu-alloy	Contact surface	Gold over nickel
Layer structure of solder connection	≥ 50 µ" Ni / 100 µ" Sn	Layer structure of plug contact	≥ 50 µ" Ni / 30 µ" Au
Operating temperature, min.	-55 °C	Operating temperature, max.	105 °C

Packing

Packaging	Tray	VPE length	305 mm
VPE width	202 mm	VPE height	25 mm

Classifications

ETIM 6.0	EC002637	ETIM 7.0	EC002637
ETIM 8.0	EC002637	ETIM 9.0	EC002637
ECLASS 9.0	27-44-04-02	ECLASS 9.1	27-44-04-02
ECLASS 10.0	27-44-04-02	ECLASS 11.0	27-46-02-01
ECLASS 12.0	27-46-02-01	ECLASS 13.0	27-46-02-01
ECLASS 14.0	27-46-02-01		

Environmental Product Compliance

REACH SVHC	/
RoHS Compliance Status	Compliant without exemption

D-SUB M6.3 T25HB 3.2B4 TY BK

Weidmüller Interface GmbH & Co. KG
Klingenbergstraße 26
D-32758 Detmold
Germany

www.weidmueller.com

Technical data

Approvals

Approvals	
ROHS	Conform
UL File Number Search	UL Website
Certificate No. (UR)	E92202

Downloads

Engineering Data	CAD data – STEP
Catalogues	Catalogues in PDF-format

D-SUB M6.3 T25HB 3.2B4 TY BK

Weidmüller Interface GmbH & Co. KG
Klingenbergstraße 26
D-32758 Detmold
Germany

www.weidmueller.com

Drawings



D-SUB M6.3 T25HB 3.2B4 TY BK

Weidmüller Interface GmbH & Co. KG
Klingenbergstraße 26
D-32758 Detmold
Germany

www.weidmueller.com

Drawings

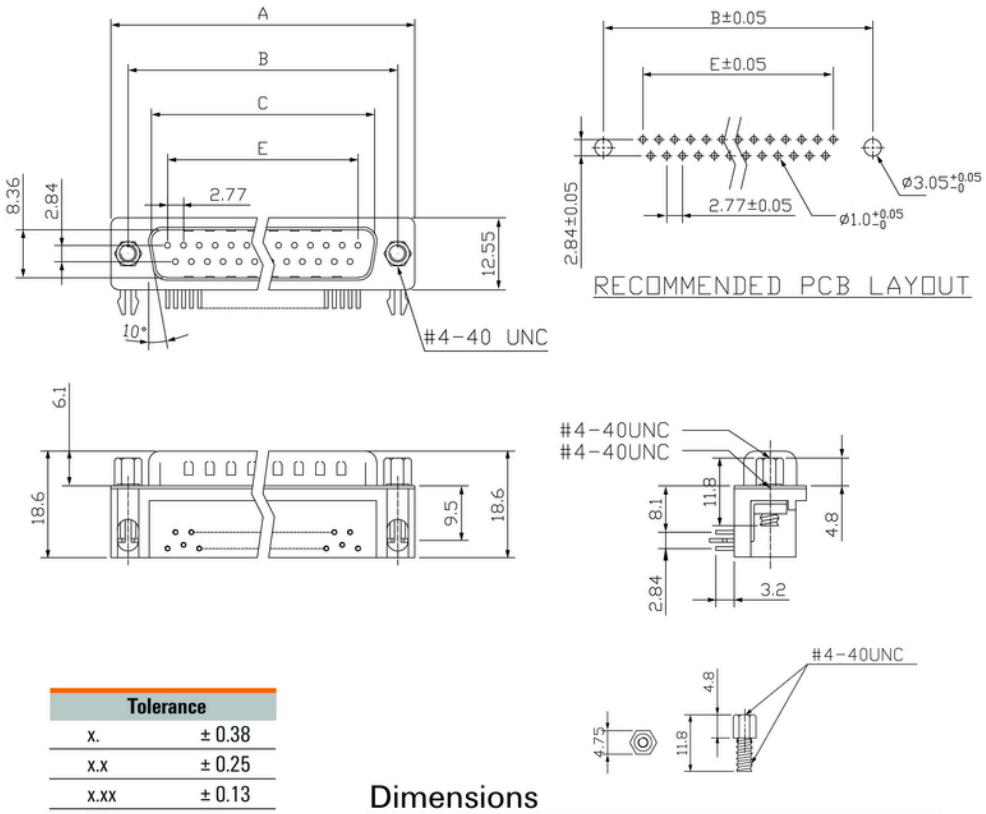

Tolerance	
x.	± 0.38
x.x	± 0.25
x.xx	± 0.13
DIM	TOL
x.	± 3°
x.x	± 1.0°
Angle	TOL

Dimensions

No. of poles	A	B	C	E
9	30.81	24.99	16.92	11.08
15	39.14	33.32	25.50	19.39
25	53.04	47.04	38.96	33.24

Wave Solder Profile

Recommended wave solderding profiles

Weidmüller Interface GmbH & Co. KG
Klingenbergstraße 16
D-32758 Detmold
Germany
Fon: +49 5231 14-0
Fax: +49 5231 14-292083
www.weidmueller.com

Single Wave:

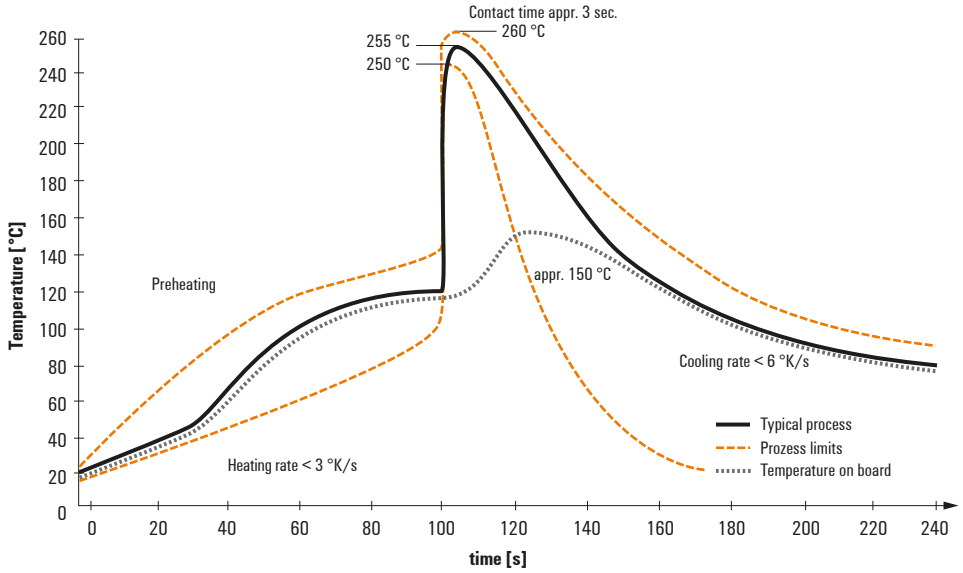

Double Wave:

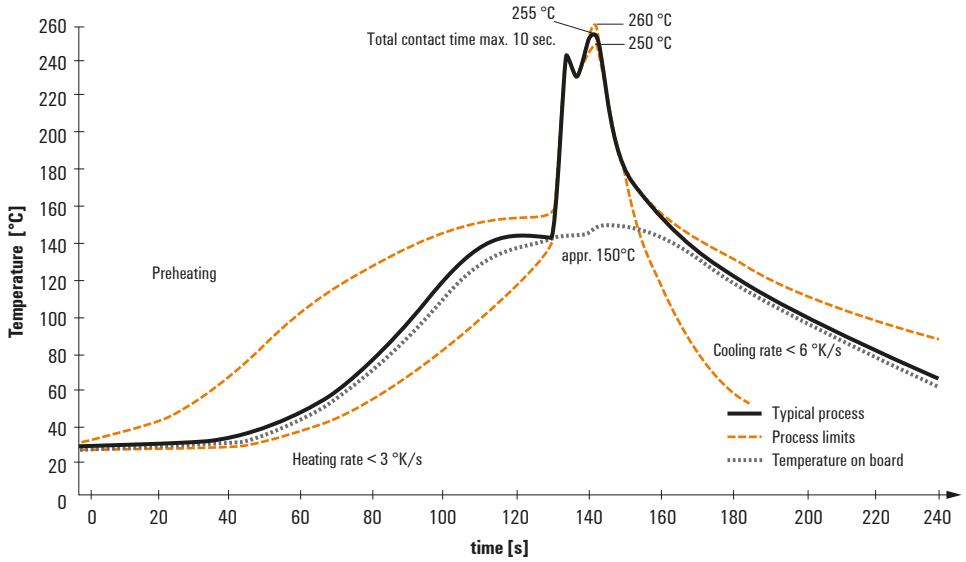

Wave soldering profiles

Wired connection elements should be processed in accordance with the DIN EN 61760-1 standard. We have included two recommendations for practical wave soldering profiles, with which Weidmüller PCB terminals and connectors are qualified.

When choosing a suitable profile for your application, the following factors also need to be considered:
- PCB thickness
- Proportion of Cu in the layers
- Single/double-sided assembly
- Product range
- Heating and cooling rates

The single and double wave profiles each indicate the recommended operating range, including the maximum soldering temperature of 260°C. In practice, the maximum soldering temperature is quite often well below the above maximum profile.

We reserve the right to make technical changes.