MPS 5/05 D11 S TN B B

Weidmüller Interface GmbH & Co. KG
Klingenbergstraße 26
D-32758 Detmold
Germany

www.weidmueller.com

Product image



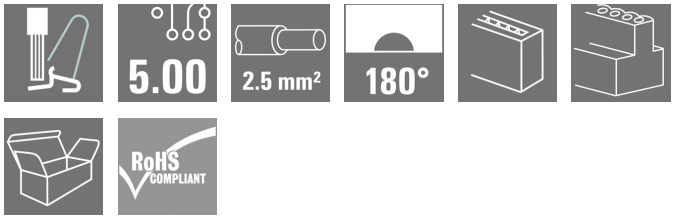

OMNIMATE® 4.0 - the next evolution step

OMNIMATE® 4.0 follows the trend of One Cable Technology (OCT). The modular concept enables the fast configuration of hybrid interfaces, which transmit data, signals and energy in a single connector. As a result, you can reduce the cabling effort in a wide variety of applications, simplify maintenance and accelerate automation processes. The unique SNAP IN connection is the backbone and speeds up the wiring process.

The fastest connection yet

- Fast, safe, and tool-free wiring due to unique SNAP IN connection
- Ready for Robot through "wire ready" delivery with open clamping point
- Optical and acoustic feedback indicates proper wiring

Create your own configuration

- Flexible configuration and ordering via the Weidmüller Configurator (WMC)
- Dispatch within three days – even for individually configured products
- Automatic offer preparation for the configurated product

Simply configuration of modular hybrid connectors

- Flexible combination options for power, signal and data transmission
- Future-proof Single-Pair Ethernet technology

General ordering data

Version	PCB plug-in connector, female plug, Pitch in mm (P): 5.00 mm, Number of poles: 5, 180°, Box
Order No.	2741800000
Type	MPS 5/05 D11 S TN B B
GTIN (EAN)	4064675055327
Qty.	48 pc(s).
Product data	IEC: 400 V / 26.8 A / 0.5 - 2.5 mm² UL: 300 V / 18.5 A / AWG 18 - AWG 14
Packaging	Box

MPS 5/05 D11 S TN B B

Weidmüller Interface GmbH & Co. KG
Klingenbergstraße 26
D-32758 Detmold
Germany

www.weidmueller.com

Technical data

Dimensions and weights

Depth	36 mm	Depth (inches)	1.417 inch
Height	15.5 mm	Height (inches)	0.61 inch
Width	35.2 mm	Width (inches)	1.386 inch
Net weight	30.882 g		

System Parameters

Product family	OMNIMATE 4.0	
Type of connection	Field connection	
Wire connection method	SNAP IN	
Pitch in mm (P)	5 mm	
Pitch in inches (P)	0.197 "	
Conductor outlet direction	180°	
Number of poles	5	
L1 in mm	20 mm	
L1 in inches	0.787 "	
Number of rows	1	
Pin series quantity	1	
Touch-safe protection acc. to DIN VDE 57 106	Safe from finger touch	
Touch-safe protection acc. to DIN VDE 0470	IP 20	
Protection degree	IP20	
Volume resistance	≤5 mΩ	
Stripping length	9 mm	
Stripping length tolerance	min.	8 mm
	max.	10 mm
Plugging cycles	25	
Plugging force/pole, max.	8.5 N	
Pulling force/pole, max.	8.5 N	

Material data

Insulating material	PBT GF	Colour	black
Colour chart (similar)	RAL 9011	Insulating material group	I
Comparative Tracking Index (CTI)	≥ 600	UL 94 flammability rating	V-0
Contact material	Cu-alloy	Contact surface	tinned
Storage temperature, min.	-25 °C	Storage temperature, max.	55 °C
Operating temperature, min.	-40 °C	Operating temperature, max.	85 °C

Conductors suitable for connection

Clamping range, min.	0.34 mm²
Clamping range, max.	4 mm²
Solid, min. H05(07) V-U	0.5 mm²
Solid, max. H05(07) V-U	2.5 mm²
Flexible, min. H05(07) V-K	0.5 mm²
Flexible, max. H05(07) V-K	2.5 mm²
w. plastic collar ferrule, DIN 46228 pt 4, min.	0.34 mm²
w. plastic collar ferrule, DIN 46228 pt 4, max.	2.5 mm²
w. wire end ferrule, DIN 46228 pt 1, min.	0.34 mm²
w. wire end ferrule, DIN 46228 pt 1, max.	2.5 mm²

MPS 5/05 D11 S TN B B

Weidmüller Interface GmbH & Co. KG
Klingenbergstraße 26
D-32758 Detmold
Germany

www.weidmueller.com

Technical data

Outer diameter of insulation, max.	4 mm			
Clampable conductor	Cross-section for conductor connection	nominal	0.34 mm²	
	wire end ferrule	Stripping length	nominal	10 mm
		Recommended wire-end ferrule	H0,34/12 TK	
	Cross-section for conductor connection	nominal	0.5 mm²	
	wire end ferrule	Stripping length	nominal	12 mm
		Recommended wire-end ferrule	H0,5/16 OR	
		Stripping length	nominal	10 mm
		Recommended wire-end ferrule	H0,5/10	
	Cross-section for conductor connection	nominal	0.75 mm²	
	wire end ferrule	Stripping length	nominal	12 mm
		Recommended wire-end ferrule	H0,75/16 W	
		Stripping length	nominal	10 mm
		Recommended wire-end ferrule	H0,75/10	
	Cross-section for conductor connection	nominal	1 mm²	
	wire end ferrule	Stripping length	nominal	12 mm
		Recommended wire-end ferrule	H1,0/16 GE	
		Stripping length	nominal	10 mm
		Recommended wire-end ferrule	H1,0/10	
	Cross-section for conductor connection	nominal	1.5 mm²	
	wire end ferrule	Stripping length	nominal	12 mm
		Recommended wire-end ferrule	H1,5/16 R	
		Stripping length	nominal	10 mm
		Recommended wire-end ferrule	H1,5/10	
	Cross-section for conductor connection	nominal	2.5 mm²	
	wire end ferrule	Stripping length	nominal	10 mm
		Recommended wire-end ferrule	H2,5/15D BL	
		Stripping length	nominal	10 mm
		Recommended wire-end ferrule	H2,5/10	
Reference text	The outside diameter of the plastic collar should not be larger than the pitch (P), Length of ferrules is to be chosen depending on the product and the rated voltage.			

Rated data acc. to IEC

tested acc. to standard	IEC 60664-1, IEC 61984	Rated current, min. number of poles (Tu=20°C)	26.8 A
Rated current, max. number of poles (Tu=20°C)	19.7 A	Rated current, min. number of poles (Tu=40°C)	23.1 A
Rated current, max. number of poles (Tu=40°C)	16.9 A	Rated voltage for surge voltage class / pollution degree II/2	400 V
Rated voltage for surge voltage class / pollution degree III/2	320 V	Rated voltage for surge voltage class / pollution degree III/3	250 V
Rated impulse voltage for surge voltage class/ pollution degree II/2	4 kV	Rated impulse voltage for surge voltage class/ pollution degree III/2	4 kV
Rated impulse voltage for surge voltage class/ contamination degree III/3	4 kV		

MPS 5/05 D11 S TN B B

Weidmüller Interface GmbH & Co. KG
Klingenbergstraße 26
D-32758 Detmold
Germany

www.weidmueller.com

Technical data

Rated data acc. to UL 1059

Rated voltage (Use group B / UL 1059)	300 V	Rated voltage (Use group D / UL 1059)	300 V
Rated current (Use group B / UL 1059)	18.5 A	Rated current (Use group D / UL 1059)	10 A
Wire cross-section, AWG, min.	AWG 18	Wire cross-section, AWG, max.	AWG 14

Technical data - hybrid (data)

Connection technology (Data)	Insulation displacement connection (IDC)	Connector Standard (Data)	IEC 63171-2
Contact material (Data)	Bronze tin-plated	Housing main material (Data)	zinc diecast nickel-plated
Material locking lever (Data)	Stainless steel	Shielding material (Data)	bronze tin-plated
Material insulator (Data)	PC UL94 V0	Sheath diameter, min. (Data)	3.6 mm
Sheath diameter, max. (Data)	5.7 mm	Insulation cross-section, min. (Data)	0.85
Insulation cross-section, max. (Data)	1.6	Dielectric strength, contact / contact (Data)	≥ 1000 V DC
Dielectric strength, contact / shield (Data)	≤ 1500 V DC	Current-carrying capacity (Data)	1.4 A
Contact resistance (Data)	≤ 20 mΩ	Insulation strength (Data)	≥ 500 MΩ
Network standard (Data)	IEEE 802.3bw (100 BaseT1), IEEE 802.3cg (10BaseT1), IEEE 802.3bp (1000 BaseT1)	PoE / PoE+ (Data)	PoDL acc. to IEEE 802.3bu / cg
Application-specific communication cable facilities (Data)	ISO/IEC 11801-1 Amd.1, ISO/IEC 11801-3 Amd.1, ISO/IEC 11801-6 Amd.1	Ability to reconnect (Data)	≤ 4 cycles (with the same cross-section)

MPS 5/05 D11 S TN B B

Weidmüller Interface GmbH & Co. KG
Klingenbergstraße 26
D-32758 Detmold
Germany

www.weidmueller.com

Technical data

Technical data - hybrid (signal)

Number of poles (Signal)	5	Pitch in mm (Signal)	5 mm
Pitch in inches (Signal)	0.197 "	Contact material (Signal)	CuSn
Contact surface (Signal)	tinned	Clamping range, min. (Signal)	0.5 mm²
Clamping range, max. (Signal)	4 mm²	Wire cross-section, AWG, min. (Signal)	AWG 20
Wire cross-section, AWG, max. (Signal)	AWG 12	w. plastic collar ferrule, DIN 46228 pt 4, min. (Signal)	0.5 mm²
w. plastic collar ferrule, DIN 46228 pt 4, max. (Signal)	2.5 mm²	w. wire end ferrule, DIN 46228 pt 1, min. (Signal)	0.5 mm²
w. wire end ferrule, DIN 46228 pt 1, max. (Signal)	2.5 mm²	Flexible, min. H05(07) V-K (Signal)	0.5 mm²
Flexible, max. H05(07) V-K (Signal)	4 mm²	Solid, min. H05(07) V-U (Signal)	0.5 mm²
Solid, max. H05(07) V-U (Signal)	2.5 mm²	Outside diameter of the insulation, max. (Signal)	4 mm
Stripping length (Signal)	9 mm	Rated current (Use group B / UL 1059) (Signal)	18.5 A
Rated current (Use group C / UL 1059) (Signal)	18.5 A	Rated current (Use group D / UL 1059) (Signal)	10 A
Rated current, min. number of poles (Tu=20°C) (Signal)	26.8 A	Rated current, max. number of poles (Tu=20°C) (Signal)	19.7 A
Rated current, min. number of poles (Tu=40°C) (Signal)	23.1 A	Rated current, max. number of poles (Tu=40°C) (Signal)	16.9 A
Rated impulse voltage for surge voltage class/ pollution degree II/2 (Signal)	4 kV	Rated impulse voltage for surge voltage class/ pollution degree III/2 (Signal)	4 kV
Rated impulse voltage for surge voltage class/ pollution degree III/3 (Signal)	4 kV	Rated voltage (Use group B / UL 1059) (Signal)	600 V
Rated voltage (Use group C / UL 1059) (Signal)	600 V	Rated voltage (Use group D / UL 1059) (Signal)	600 V
Rated voltage for surge voltage class / pollution degree II/2 (Signal)	400 V	Rated voltage for surge voltage class / pollution degree III/2 (Signal)	320 V
Rated voltage for surge voltage class / pollution degree III/3 (Signal)	250 V	Clearance distance, min. (Signal)	7.5 mm
Creepage distance, min. (Signal)	7.5 mm		

Classifications

ETIM 6.0	EC002638	ETIM 7.0	EC002638
ETIM 8.0	EC002638	ETIM 9.0	EC002638
ECLASS 9.0	27-44-03-09	ECLASS 9.1	27-44-03-09
ECLASS 10.0	27-44-03-09	ECLASS 11.0	27-46-02-02
ECLASS 12.0	27-46-02-02	ECLASS 13.0	27-46-02-02
ECLASS 14.0	27-46-02-02		

Environmental Product Compliance

RoHS Compliance Status	Compliant without exemption
REACH SVHC	No SVHC above 0.1 wt%

MPS 5/05 D11 S TN B B

Weidmüller Interface GmbH & Co. KG
Klingenbergstraße 26
D-32758 Detmold
Germany

www.weidmueller.com

Technical data

Important note

IPC conformity	Conformity: The products are developed, manufactured and delivered according international recognized standards and norms and comply with the assured properties in the data sheet resp. fulfill decorative properties in accordance with IPC-A-610 "Class 2". Further claims on the products can be evaluated on request.
Notes	• Rated current related to rated cross-section & min. No. of poles. • P on drawing = pitch • Rated data refer only to the component itself. Clearance and creepage distances to other components are to be designed in accordance with the relevant application standards. • Wire end ferrule without plastic collar to DIN 46228/1 • In accordance with IEC 61984, OMNIMATE-connectors are connectors without breaking capacity (COC). During designated use, connectors are not allowed to be engaged or disengaged when live or under load • Long term storage of the product with average temperature of 50 °C and maximum humidity 70%, 36 months

Approvals

ROHS	Conform

Downloads

Approval/Certificate/Document of Conformity	Declaration of the Manufacturer
Engineering Data	CAD data – STEP
User Documentation	Assembly instructions MPS 5 D11 and MPS 7S-5 D11 EN DE
Catalogues	Catalogues in PDF-format

MPS 5/05 D11 S TN B B

Weidmüller Interface GmbH & Co. KG
Klingenbergstraße 26
D-32758 Detmold
Germany

www.weidmueller.com

Drawings



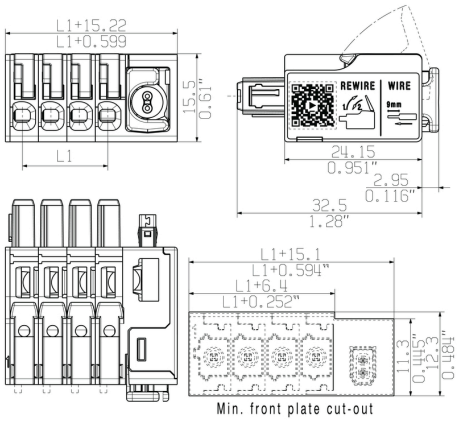

Product benefits



Fastest connection technology SNAP IN

Product benefits



Acoustic and visual feedback

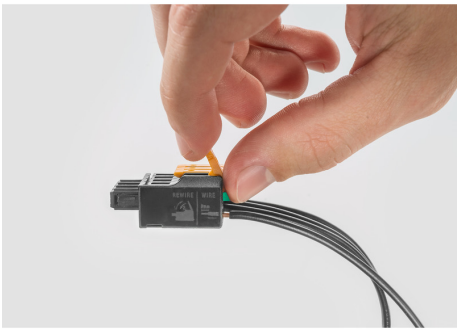

Dimensions without tolerances are no check dimensions

The English version is binding

Allgemeingueltige Kundenzeichnung, aktueller Stand nur auf Anfrage
General customer drawing, topical version only if required

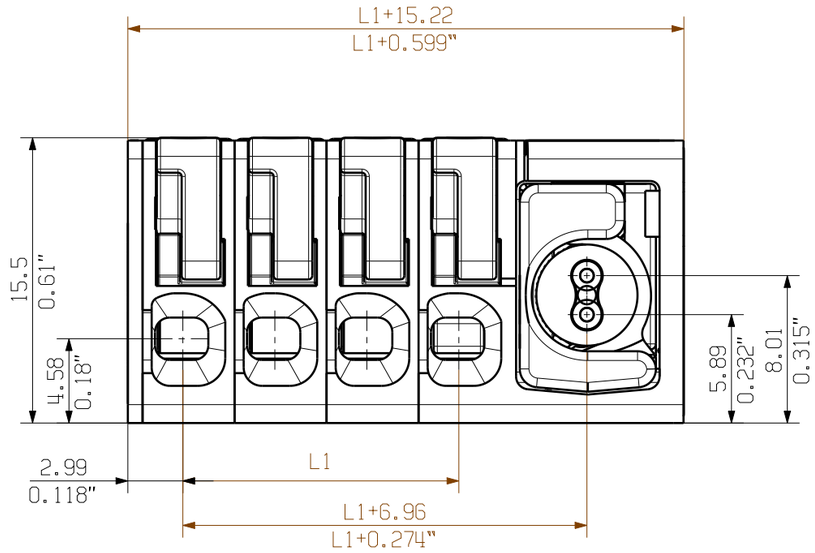

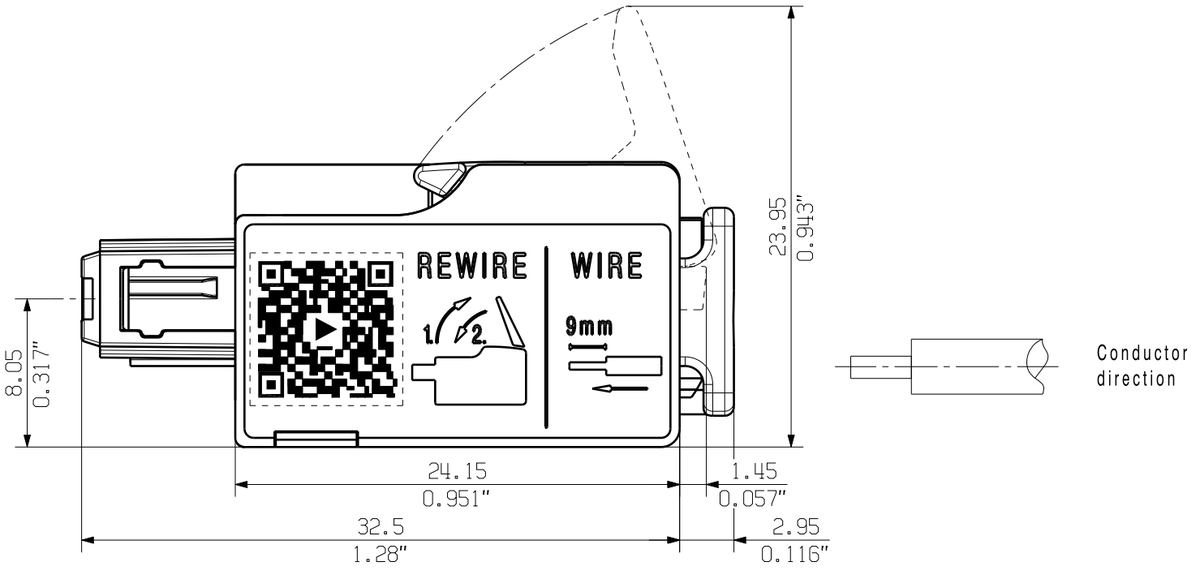

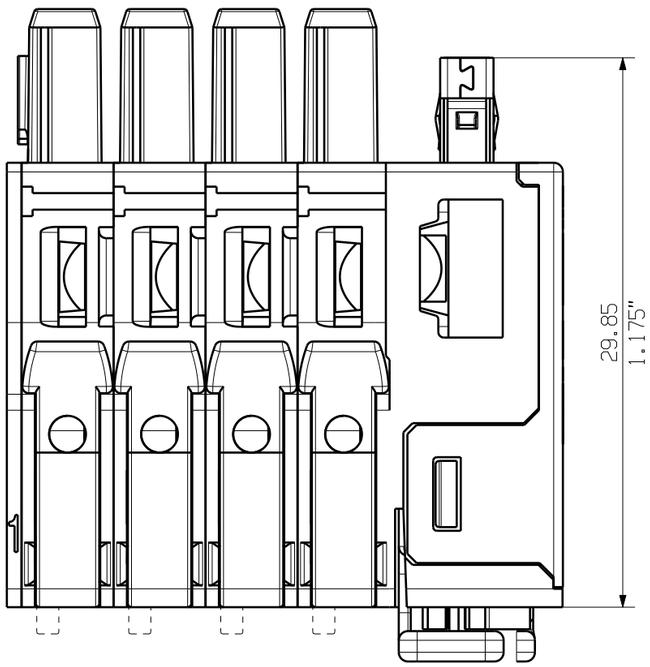

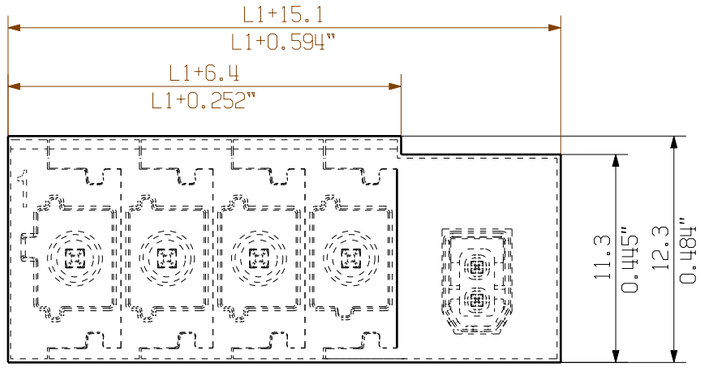

Min. front plate cut-out

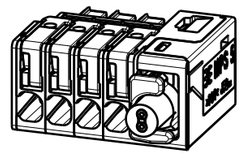

M 1/1

11	50.00	1.969
10	45.00	1.772
9	40.00	1.575
8	35.00	1.378
7	30.00	1.181
6	25.00	0.984
5	20.00	0.787
4	15.00	0.591
3	10.00	0.394
2	5.00	0.197
n Poles	L1 [mm]	L1 [inch]

Further dim. & info. see data sheet

General tolerance:
DIN ISO 2768-mK

For the mounting of PCBs, it should be noted that the rated data given in the catalogue relates only to the connection elements. The neccessary creepage and clearance paths must be observed in connection with the respective applicant in accordance to VDE 0110. The current-carrying capacity and pitch tolerance is to be determined according to DIN IEC 326 part 3 very fine.

Weidmueller connectors are tested to the DIN VDE 0627 standard, and are valid for its field of application. Provided that the connectors are used to the intended purpose, all requirements with respect to the occuring of electrical, mechanical, thermic and corrosive stress will be satisfied.

RoHS COMPLIANT

EC00004980
P028441
.

First Issue Date
07.05.2020

Max. nos.

Modification

Prim PLM Part No.: .

Prim ERP Part No.: .

Weidmüller

72561
Drawing no.

5
Issue no.

Sheet 7 of 8 sheets

	Date	Name
Drawn	15.03.2021	Tauber-Reglin,
Responsible		Schmitz, Till
Approved	24.03.2021	Sapina, Svetos

Scale: 3/1 Size: A3

Drawings Assembly

MPS 5/... TN ...
BUCHSENSTECKER
FEMALE PLUG

Product file: .

The reproduction, distribution and utilization of this document as well as the communication of its contents to others without explicit authorization is prohibited. Offenders will be held liable for the payment of damages. Weidmueller exclusively reserves the right to file for patents, utility models or designs.
© Weidmueller Interface GmbH & Co. KG